FAIRCHILD SEMICONDUCTOR®

4-PIN PHOTOTRANSISTOR OPTOCOUPLERS

H11AA814 SERIES H11A617 SERIES H11A817 SERIES

PACKAGE

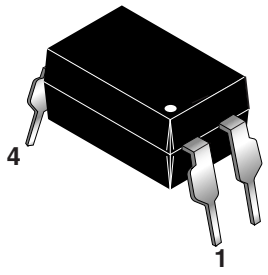

H11AA814 SCHEMATIC

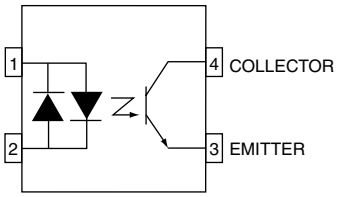

H11A617 & H11A817 SCHEMATIC

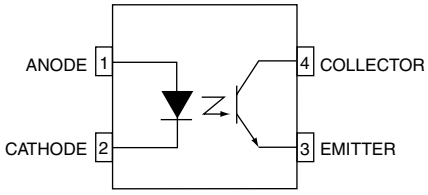

DESCRIPTION

The H11AA814 Series consists of two gallium arsenide infrared emitting diodes, connected in inverse parallel, driving a single silicon phototransistor in a 4-pin dual in-line package.

The H11A617 and H11A817 Series consists of a gallium arsenide infrared emitting diode driving a silicon phototransistor in a 4-pin dual in-line package.

FEATURES

- Compact 4-pin package
- Current transfer ratio in selected groups:

H11AA814:	20-300%	H11A817:	50-600%
H11AA814A:	50-150%	H11A817A:	80-160%
H11A617A:	40%-80%	H11A817B:	130-260%
H11A617B:	63%-125%	H11A817C:	200-400%
H11A617C:	100%-200%	H11A817D:	300-600%
H11A617D:	160%-320%		

- Minimum BV_{CEO} of 70V guaranteed

APPLICATIONS

H11AA814 Series
- AC line monitor
- Unknown polarity DC sensor
- Telephone line interface

H11A617 and H11A817 Series
- Power supply regulators
- Digital logic inputs
- Microprocessor inputs

© 2003 Fairchild Semiconductor Corporation

Parameter	Symbol	Device	Value	Units
TOTAL DEVICE				
Storage Temperature	T_{STG}	All	-55 to +150	°C
Operating Temperature	T_{OPR}	All	-55 to +100	°C
Lead Solder Temperature	T_{SOL}	All	260 for 10 sec	°C
Total Device Power Dissipation (-55°C to 50 °C)	P_D	All	200	mW
EMITTER				
Continuous Forward Current	I_F	All	50	mA
Reverse Voltage	V_R	H11A617A/B/C/D H11A817/A/B/C/D	6 5	V
Forward Current - Peak (1 µs pulse, 300 pps)	I_F(pk)	All	1.0	A
LED Power Dissipation (25°C ambient)	P_D	All	100	mW
Derate above 25°C			1.33	mW/°C
DETECTOR				
Collector-Emitter Voltage	V_{CEO}	All	70	V
Emitter-Collector Voltage	V_{ECO}	H11AA814/A H11A617A/B/C/D H11A817/A/B/C/D	6 7 6	V
Continuous Collector Current	I_C	All	50	mA
Detector Power Dissipation (25°C ambient)	P_D	All	150	mW
Derate above 25°C			2.0	mW/°C

ELECTRICAL CHARACTERISTICS (T_A = 25°C Unless otherwise specified.)

INDIVIDUAL COMPONENT CHARACTERISTICS

Parameter	Test Conditions	Symbol	Device	Min	Typ*	Max	Unit
EMITTER	(I_F = 60 mA)	V_F	H11A617A/B/C/D		1.35	1.65	V
Input Forward Voltage	(I_F = 20 mA)		H11A817/A/B/C/D		1.2	1.5	
	(I_F = ±20 mA)		H11AA814/A		1.2	1.5	
Reverse Leakage Current	(V_R = 6.0 V)	I_R	H11A617A/B/C/D		.001	10	µA
	(V_R = 5.0 V)		H11A817/A/B/C/D				
DETECTOR Collector-Emitter Breakdown Voltage	(I_C = 1.0 mA, I_F = 0)	BV_{CEO}	ALL	70	100		V
Emitter-Collector Breakdown Voltage	(I_E = 100 µA, I_F = 0)	BV_{ECO}	H11AA814/A	6	10		V
			H11A617A/B/C/D	7			
			H11A817/A/B/C/D	6			
Collector-Emitter Dark Current	(V_{CE} = 10V, I_F = 0)	I_{CEO}	H11AA814/A, H11A817/A/B/C/D, H11A617C/D		1	100	nA
			H11A617A/B			50	
Collector-Emitter Capacitance	(V_{CE} = 0 V, f = 1 MHz)	C_{CE}	ALL		8		pF

*Typical values at T_A = 25°C.

© 2003 Fairchild Semiconductor Corporation

TRANSFER CHARACTERISTICS (T_A = 25°C Unless otherwise specified.)

DC Characteristic	Test Conditions	Symbol	Device	Min	Typ*	Max	Unit
Current Transfer Ratio	(I_F = ±1 mA, V_{CE} = 5 V) (note 1)	CTR	H11AA814	20		300	%
	(I_F = ±1 mA, V_{CE} = 5 V) (note 1)		H11AA814A	50		150	%
	(I_F = 10 mA, V_{CE} = 5 V) (note 1)		H11A617A	40		80	%
			H11A617B	63		125	%
			H11A617C	100		200	%
			H11A617D	160		320	%
	(I_F = 5 mA, V_{CE} = 5 V) (note 1)		H11A817	50		600	%
			H11A817A	80		160	%
			H11A817B	130		260	%
			H11A817C	200		400	%
			H11A817D	300		600	%
	(I_F = 1 mA, V_{CE} = 5 V) (note 1)		H11A617A	13			%
			H11A617B	22			%
			H11A617C	34			%
			H11A617D	56			%
Collector-Emitter Saturation Voltage	(I_C = 1 mA, I_F = ±20 mA)	$V_{CE\ (SAT)}$	H11AA814/A			0.2	V
	(I_C = 2.5 mA, I_F = 10 mA)		H11A617A/B/C/D			0.4	
	(I_C = 1 mA, I_F = 20 mA)		H11A817/A/B/C/D			0.2	
AC Characteristic							
Rise Time	(I_C = 2 mA, V_{CE} = 2 V, R_L = 100V) (note 2)	t_r	ALL		2.4	18	µs
Fall Time	(I_C = 2 mA, V_{CE} = 2 V, R_L = 100V) (note 2)	t_f	ALL		2.4	18	µs

ISOLATION CHARACTERISTICS

Characteristic	Test Conditions	Symbol	Min	Typ*	Max	Units
Input-Output Isolation Voltage (note 3)	f = 60Hz, t = 1 min	V_{ISO}	5300			Vac(rms)
Isolation Resistance	(V_{I-O} = 500 VDC)	R_{ISO}	10^{11}			Ω
Isolation Capacitance	(V_{I-O} = 0, f = 1 MHz)	C_{ISO}		0.5		pf

*Typical values at T_A = 25°C.

NOTES

1. Current Transfer Ratio (CTR) = I_C/I_F x 100%.
2. For test circuit setup and waveforms, refer to Figure 8.
3. For this test, Pins 1 and 2 are common, and Pins 3 and 4 are common.

© 2003 Fairchild Semiconductor Corporation

Fig. 1 Normalized CTR vs. Forward Current

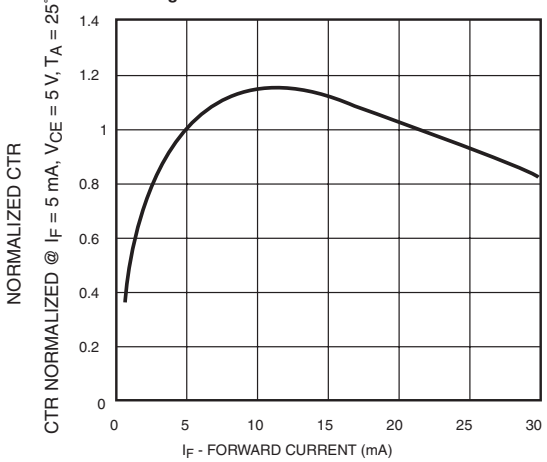

Fig. 2 Normalized CTR vs. Ambient Temperature

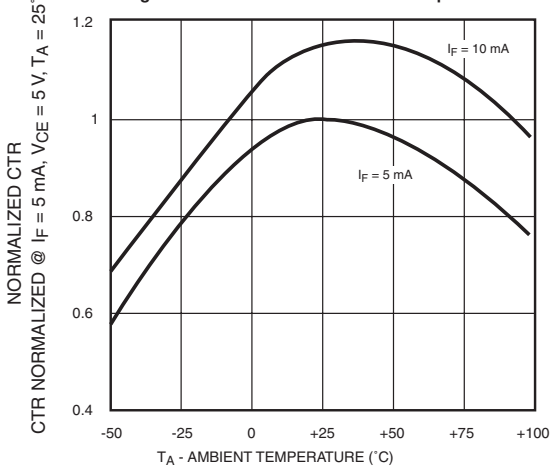

Fig. 3 Collector-Emitter Saturation Voltage vs. Ambient Temperature

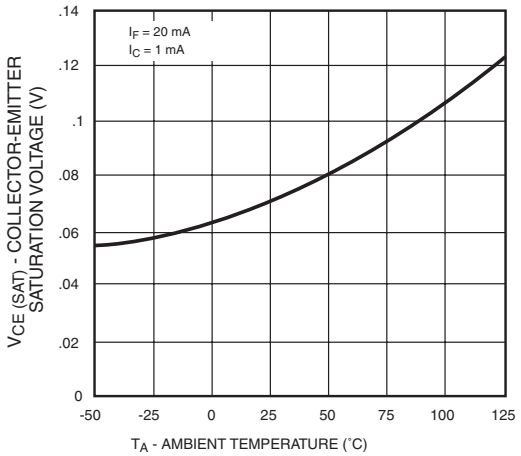

Fig. 4 Forward Voltage vs. Forward Current

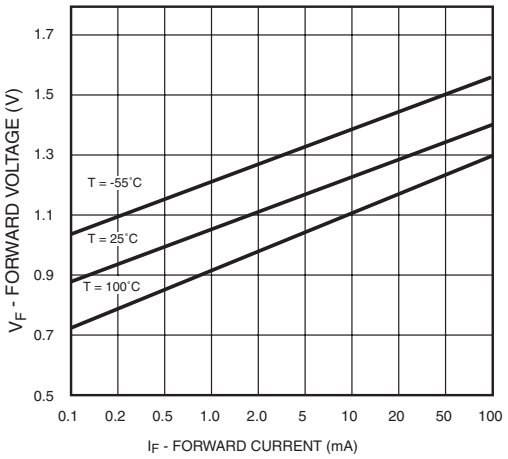

Fig. 5 Collector Current vs. Collector-Emitter Voltage

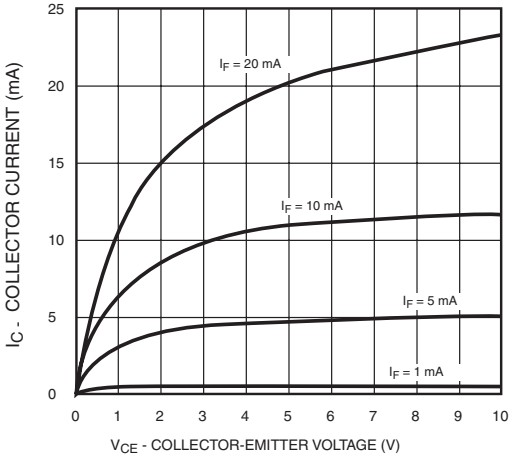

© 2003 Fairchild Semiconductor Corporation

Fig. 6 Collector Leakage Current vs. Ambient Temperature

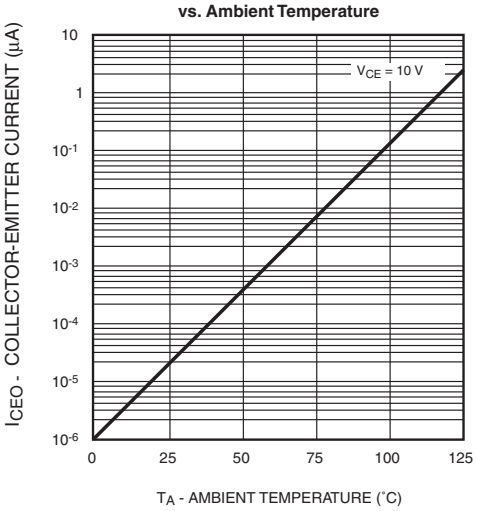

Fig. 7 Rise and Fall Time vs. Load Resistor

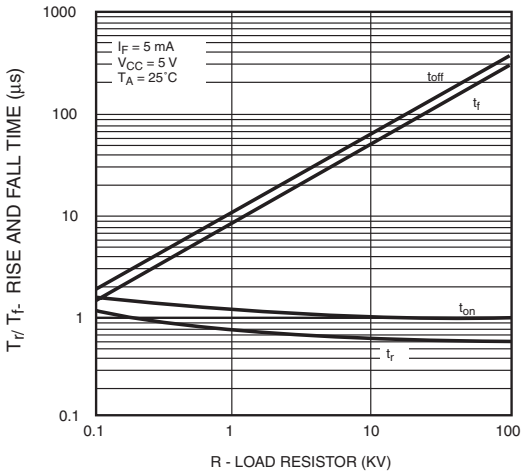

Figure 8. Switching Time Test Circuit and Waveforms

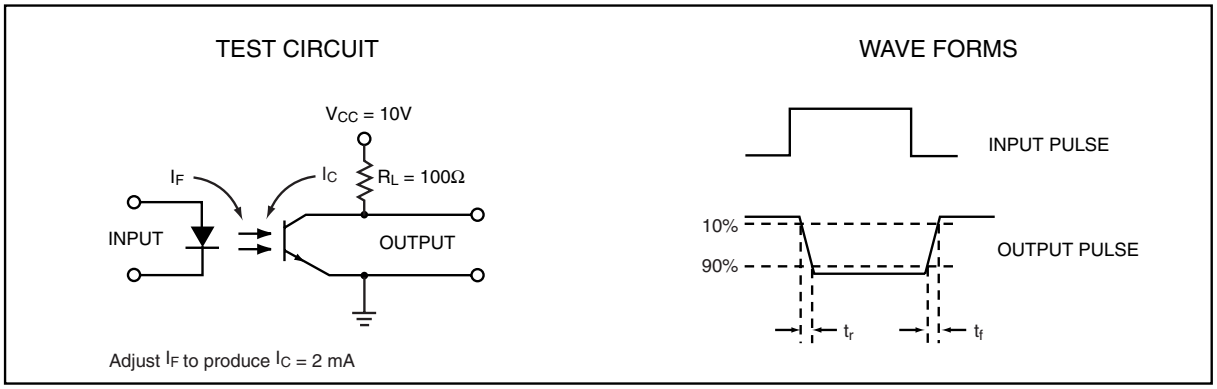

Recommended Thermal Reflow Profile for Surface Mount DIP Package

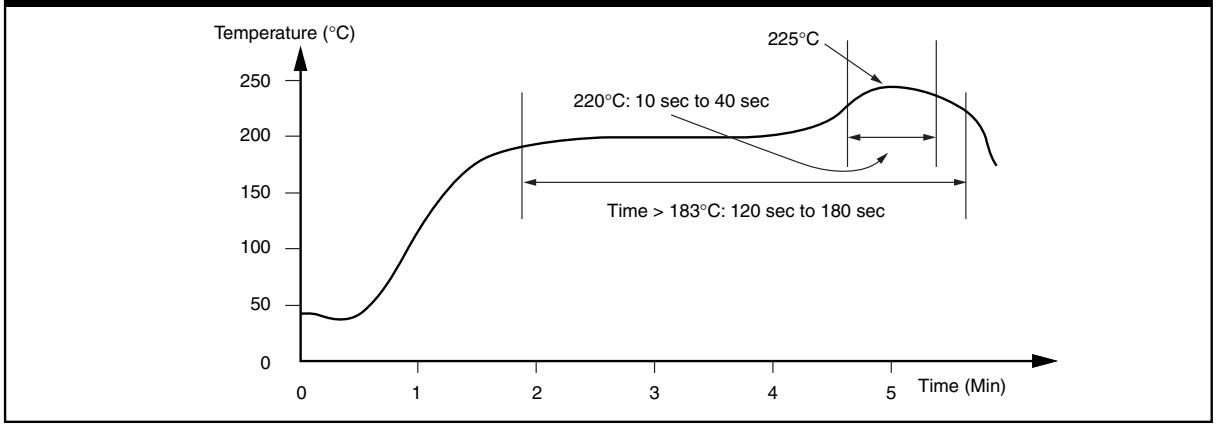

Package Dimensions (Through Hole)

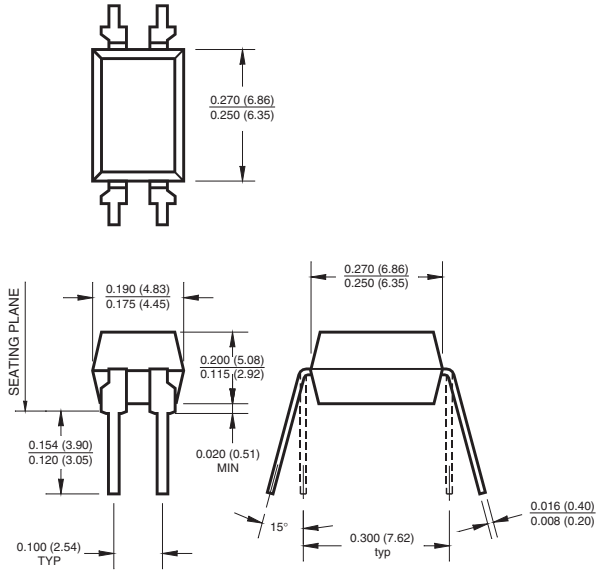

Package Dimensions (Surface Mount)

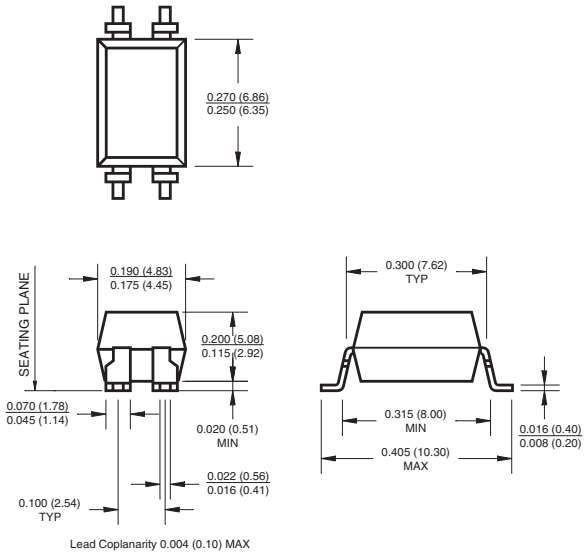

Package Dimensions (0.4” Lead Spacing)

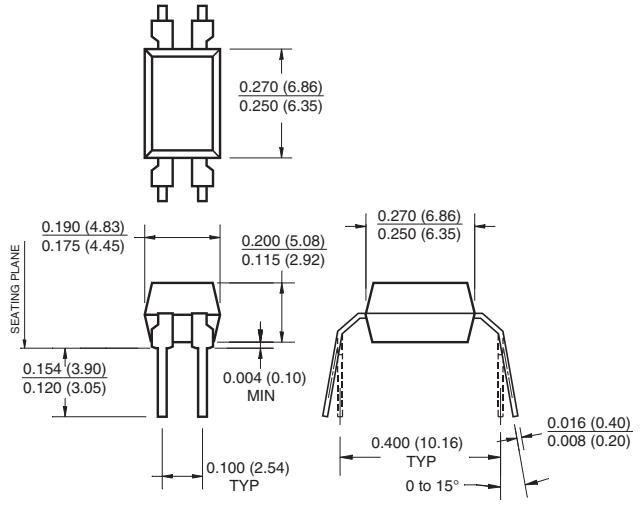

Footprint Dimensions (Surface Mount)

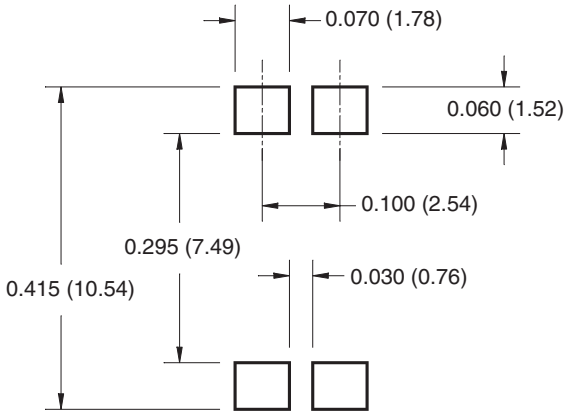

NOTE
All dimensions are in inches (millimeters)

© 2003 Fairchild Semiconductor Corporation

ORDERING INFORMATION

Option	Order Entry Identifier	Description
S	.S	Surface Mount Lead Bend
SD	.SD	Surface Mount; Tape and reel
W	.W	0.4" Lead Spacing
300	.300	VDE 0884
300W	.300W	VDE 0884, 0.4" Lead Spacing
3S	.3S	VDE 0884, Surface Mount
3SD	.3SD	VDE 0884, Surface Mount, Tape & Reel

MARKING INFORMATION

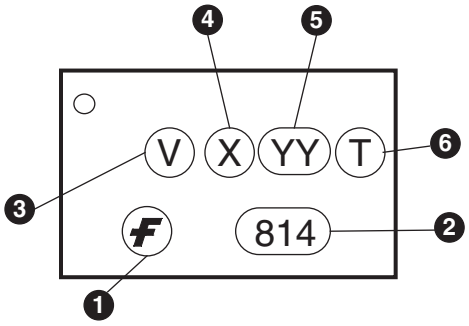

Definitions	
1	Fairchild logo
2	Device number
3	VDE mark (Note: Only appears on parts ordered with VDE option – See order entry table)
4	One digit year code
5	Two digit work week ranging from ‘01’ to ‘53’
6	Assembly package code

© 2003 Fairchild Semiconductor Corporation

Carrier Tape Specifications

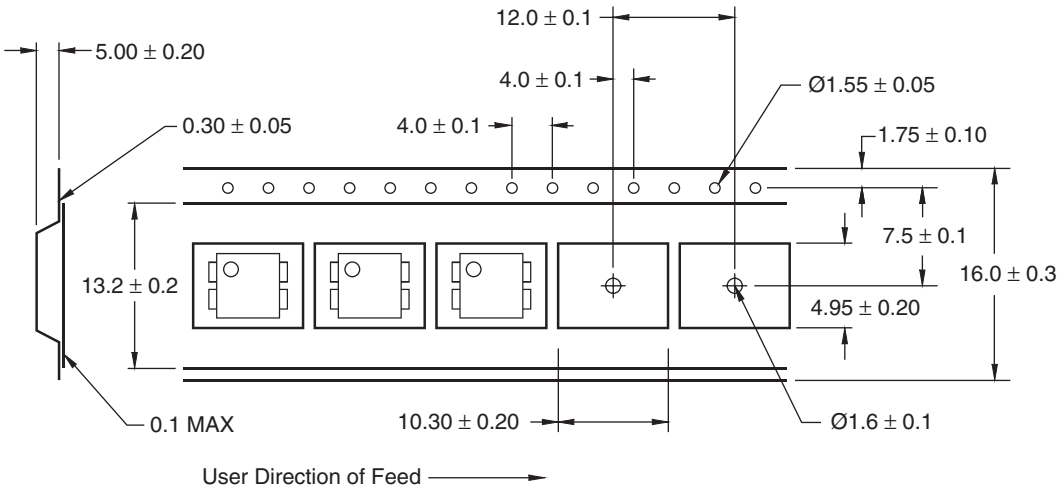

NOTE
All dimensions are in millimeters

DISCLAIMER

FAIRCHILD SEMICONDUCTOR RESERVES THE RIGHT TO MAKE CHANGES WITHOUT FURTHER NOTICE TO ANY PRODUCTS HEREIN TO IMPROVE RELIABILITY, FUNCTION OR DESIGN. FAIRCHILD DOES NOT ASSUME ANY LIABILITY ARISING OUT OF THE APPLICATION OR USE OF ANY PRODUCT OR CIRCUIT DESCRIBED HEREIN; NEITHER DOES IT CONVEY ANY LICENSE UNDER ITS PATENT RIGHTS, NOR THE RIGHTS OF OTHERS.

LIFE SUPPORT POLICY

FAIRCHILD'S PRODUCTS ARE NOT AUTHORIZED FOR USE AS CRITICAL COMPONENTS IN LIFE SUPPORT DEVICES OR SYSTEMS WITHOUT THE EXPRESS WRITTEN APPROVAL OF THE PRESIDENT OF FAIRCHILD SEMICONDUCTOR CORPORATION. As used herein:

1. Life support devices or systems are devices or systems which, (a) are intended for surgical implant into the body, or (b) support or sustain life, and (c) whose failure to perform when properly used in accordance with instructions for use provided in the labeling, can be reasonably expected to result in a significant injury of the user.
2. A critical component in any component of a life support device or system whose failure to perform can be reasonably expected to cause the failure of the life support device or system, or to affect its safety or effectiveness.

© 2003 Fairchild Semiconductor Corporation

О компании

ООО "ТрейдЭлектроникс" - это оперативные поставки широкого спектра электронных компонентов отечественного и импортного производства напрямую от производителей и с крупнейших мировых складов. Реализуемая нашей компанией продукция насчитывает более полумиллиона наименований.

Благодаря этому наша компания предлагает к поставке практически не ограниченный ассортимент компонентов как оптовыми, мелкооптовыми партиями, так и в розницу.

Наличие собственной эффективной системы логистики обеспечивает надежную поставку продукции по конкурентным ценам в точно указанные сроки.

Срок поставки со стоков в **Европе и Америке – от 3 до 14 дней.**

Срок поставки из **Азии – от 10 дней.**

Благодаря развитой сети поставщиков, помогаем в поиске и приобретении экзотичных или снятых с производства компонентов.

Предоставляем спец цены на элементы для создания инженерных сэмплов.

Упорный труд, качественный результат дают нам право быть уверенными в себе и надежными для наших клиентов.

Наша компания это:

- Гарантия качества поставляемой продукции
- Широкий ассортимент
- Минимальные сроки поставок
- Техническая поддержка
- Подбор комплектации
- Индивидуальный подход
- Гибкое ценообразование

Наша организация особенно сильна в поставках модулей, микросхем, пассивных компонентов, ксайленсах (XC), EPF, EPM и силовой электроники.

Большой выбор предлагаемой продукции, различные виды оплаты и доставки, позволят Вам сэкономить время и получить максимум выгоды от сотрудничества с нами!

Trade Electronics.ru

гарантия бесперебойности производства и качества выпускаемой продукции

Перечень производителей, продукцию которых мы поставляем на российский рынок

AMD
ANALOG DEVICES
BOURNS
Coilcraft
élantec Semiconductor, Inc.
HARRIS
Infineon
JRC
MICREL
MOTOROLA
nichicon
PHILIPS
ROHM
SGS-THOMSON
Sipex
TAIYO YUDEN
TOKO
ZILOG
Winbond
Allegro
ATMEL
BURR - BROWN
EXAR
HITACHI
intel
Lattice
muRata
OKI
QUALCOMM
SAMSUNG
SHARP
SONY
TDK
TOSHIBA
KYOCERA
ALTERA
AVX
CITILYST
CYPRESS
FAIRCHILD SEMICONDUCTOR
HOLTEK
International IOR Rectifier
LINEAR TECHNOLOGY
MITSUBISHI
National Semiconductor
ON Semiconductor
REALTEK
SANYO
SHINDENGEN
SGS
TECCOR
TUNDRA
XILINX
Amphenol
Bay Linear
CIRRUS LOGIC
DALLAS
FUJITSU
IDT
intersil
MAXIM
molex
NEC
Panasonic
RENESAS
SII
SIEMENS
ST
Texas Instruments
VISHAY
ZETEX SEMICONDUCTORS

Trade Electronics.ru

гарантия бесперебойности производства и качества выпускаемой продукции

С удовольствием будем прорабатывать для Вас поставки всех необходимых компонентов по текущим запросам для скорейшего выявления групп элементов, по которым сотрудничество именно с нашей компанией будет для Вас максимально выгодным!

С уважением,

Менеджер отдела продаж ООО

«Трейд Электроникс»

Шишлаков Евгений

8 (495)668-30-28 доб 169

manager28@tradeelectronics.ru

http://www.tradeelectronics.ru/