FAIRCHILD SEMICONDUCTOR™

May 1988
Revised September 2000

74F374
Octal D-Type Flip-Flop with 3-STATE Outputs

General Description

The 74F374 is a high-speed, low-power octal D-type flip-flop featuring separate D-type inputs for each flip-flop and 3-STATE outputs for bus-oriented applications. A buffered Clock (CP) and Output Enable ($\overline{OE}$) are common to all flip-flops.

Features

- Edge-triggered D-type inputs
- Buffered positive edge-triggered clock
- 3-STATE outputs for bus-oriented applications
- Guaranteed 4000V minimum ESD protection

Ordering Code:

Order Number	Package Number	Package Description
74F374SC	M20B	20-Lead Small Outline Integrated Circuit (SOIC), JEDEC MS-013, 0.300 Wide
74F374SJ	M20D	20-Lead Small Outline Package (SOP), EIAJ TYPE II, 5.3mm Wide
74F374MSA	MSA20	20-Lead Shrink Small Outline Package (SSOP), EIAJ TYPE II, 5.3mm Wide
74F374PC	N20A	20-Lead Plastic Dual-In-Line Package (PDIP), JEDEC MS-001, 0.300 Wide

Devices also available in Tape and Reel. Specify by appending the suffix letter "X" to the ordering code.

Logic Symbols

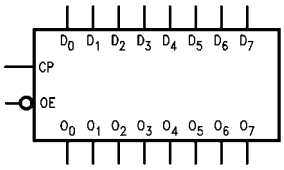

IEEE/IEC

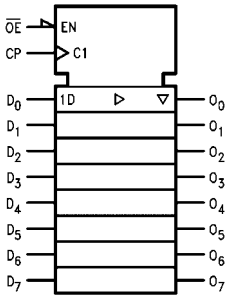

Connection Diagram

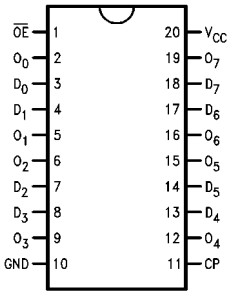

© 2000 Fairchild Semiconductor Corporation

Unit Loading/Fan Out

Pin Names	Description	U.L. HIGH/LOW	Input I_{IH}/I_{IL} Output I_{OH}/I_{OL}
D_0–D_7	Data Inputs	1.0/1.0	20 μA/–0.6 mA
CP	Clock Pulse Input (Active Rising Edge)	1.0/1.0	20 μA/–0.6 mA
$\overline{OE}$	3-STATE Output Enable Input (Active LOW)	1.0/1.0	20 μA/–0.6 mA
O_0–O_7	3-STATE Outputs	150/40 (33.3)	–3 mA/24 mA (20 mA)

Functional Description

The 74F374 consists of eight edge-triggered flip-flops with individual D-type inputs and 3-STATE true outputs. The buffered clock and buffered Output Enable are common to all flip-flops. The eight flip-flops will store the state of their individual D inputs that meet the setup and hold time requirements on the LOW-to-HIGH Clock (CP) transition. With the Output Enable ($\overline{OE}$) LOW, the contents of the eight flip-flops are available at the outputs. When the $\overline{OE}$ is HIGH, the outputs go to the high impedance state. Operation of the $\overline{OE}$ input does not affected the state of the flip-flops.

Truth Table

Inputs			Internal	Output
D_n	CP	$\overline{OE}$	Register	O_n
H	⎍	L	H	H
L	⎍	L	L	L
X	X	H	X	Z

H = HIGH Voltage Level
L = LOW Voltage Level
X = Immaterial
Z = High Impedance
⎍ = LOW-to-HIGH Clock Transition

Logic Diagram

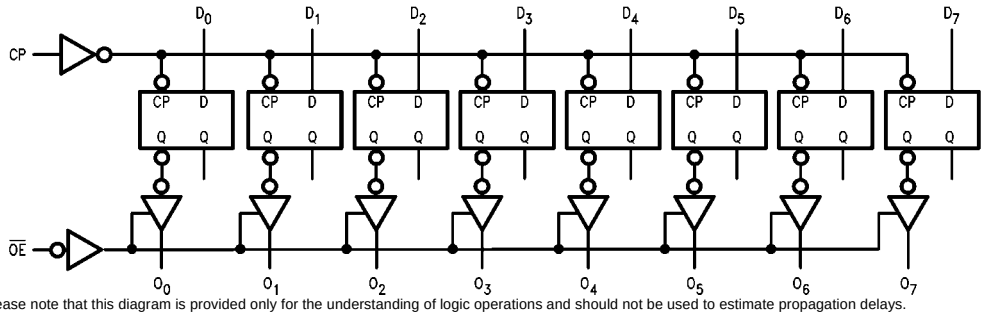

Please note that this diagram is provided only for the understanding of logic operations and should not be used to estimate propagation delays.

Absolute Maximum Ratings(Note 1)

Storage Temperature	–65°C to +150°C
Ambient Temperature under Bias	–55°C to +125°C
Junction Temperature under Bias	–55°C to +150°C
V_{CC} Pin Potential to Ground Pin	–0.5V to +7.0V
Input Voltage (Note 2)	–0.5V to +7.0V
Input Current (Note 2)	–30 mA to +5.0 mA
Voltage Applied to Output	
in HIGH State (with V_{CC} = 0V)	
Standard Output	–0.5V to V_{CC}
3-STATE Output	–0.5V to +5.5V
Current Applied to Output	
in LOW State (Max)	twice the rated I_{OL} (mA)
ESD Last Passing Voltage (Min)	4000V

Recommended Operating Conditions

Free Air Ambient Temperature	0°C to +70°C
Supply Voltage	+4.5V to +5.5V

Note 1: Absolute maximum ratings are values beyond which the device may be damaged or have its useful life impaired. Functional operation under these conditions is not implied.

Note 2: Either voltage limit or current limit is sufficient to protect inputs.

DC Electrical Characteristics

Symbol	Parameter		Min	Typ	Max	Units	V_{CC}	Conditions
V_{IH}	Input HIGH Voltage		2.0			V		Recognized as a HIGH Signal
V_{IL}	Input LOW Voltage				0.8	V		Recognized as a LOW Signal
V_{CD}	Input Clamp Diode Voltage				–1.2	V	Min	I_{IN} = –18 mA
V_{OH}	Output HIGH Voltage	10% V_{CC}	2.5			V	Min	I_{OH} = –1 mA
		10% V_{CC}	2.4					I_{OH} = –3 mA
		5% V_{CC}	2.7					I_{OH} = –1 mA
		5% V_{CC}	2.7					I_{OH} = –3 mA
V_{OL}	Output LOW Voltage	10% V_{CC}			0.5	V	Min	I_{OL} = 24 mA
I_{IH}	Input HIGH Current				5.0	µA	Max	V_{IN} = 2.7V
I_{BVI}	Input HIGH Current Breakdown Test				7.0	µA	Max	V_{IN} = 7.0V
I_{CEX}	Output HIGH Leakage Current				50	µA	Max	V_{OUT} = V_{CC}
V_{ID}	Input Leakage Test		4.75			V	0.0	I_{ID} = 1.9 µA All Other Pins Grounded
I_{OD}	Output Leakage Circuit Current				3.75	µA	0.0	V_{IOD} = 150 mV All Other Pins Grounded
I_{IL}	Input LOW Current				–0.6	mA	Max	V_{IN} = 0.5V
I_{OZH}	Output Leakage Current				50	µA	Max	V_{OUT} = 2.7V
I_{OZL}	Output Leakage Current				–50	µA	Max	V_{OUT} = 0.5V
I_{OS}	Output Short-Circuit Current		–60		–150	mA	Max	V_{OUT} = 0V
I_{ZZ}	Bus Drainage Test				500	µA	0.0V	V_{OUT} = 5.25V
I_{CCZ}	Power Supply Current			55	86	mA	Max	V_O = HIGH Z

AC Electrical Characteristics

Symbol	Parameter	$T_A = +25°C$, $V_{CC} = +5.0V$, $C_L = 50$ pF			$T_A = -55°C$ to $+125°C$, $V_{CC} = +5.0V$, $C_L = 50$ pF		$T_A = 0°C$ to $+70°C$, $V_{CC} = +5.0V$, $C_L = 50$ pF		Units
		Min	Typ	Max	Min	Max	Min	Max	
f_{MAX}	Maximum Clock Frequency	100	140		60		70		MHz
t_{PLH}	Propagation Delay	4.0	6.5	8.5	4.0	10.5	4.0	10.0	ns
t_{PHL}	CP to O_n	4.0	6.5	8.5	4.0	11.0	4.0	10.0	
t_{PZH}	Output Enable Time	2.0	9.0	11.5	2.0	14.0	2.0	12.5	ns
t_{PZL}		2.0	5.8	7.5	2.0	10.0	2.0	8.5	
t_{PHZ}	Output Disable Time	2.0	5.3	7.0	2.0	8.0	2.0	8.0	
t_{PLZ}		1.5	4.3	5.5	1.5	7.5	1.5	6.5	

AC Operating Requirements

Symbol	Parameter	$T_A = +25°C$, $V_{CC} = +5.0V$		$T_A = -55°C$ to $+125°C$, $V_{CC} = +5.0V$		$T_A = 0°C$ to $+70°C$, $V_{CC} = +5.0V$		Units
		Min	Max	Min	Max	Min	Max	
$t_S(H)$	Setup Time, HIGH or LOW	2.0		2.5		2.0		ns
$t_S(L)$	D_n to CP	2.0		2.0		2.0		
$t_H(H)$	Hold Time, HIGH or LOW	2.0		2.0		2.0		
$t_H(L)$	D_n to CP	2.0		2.5		2.0		
$t_W(H)$	CP Pulse Width	7.0		7.0		7.0		ns
$t_W(L)$	HIGH or LOW	6.0		6.0		6.0		

Physical Dimensions inches (millimeters) unless otherwise noted

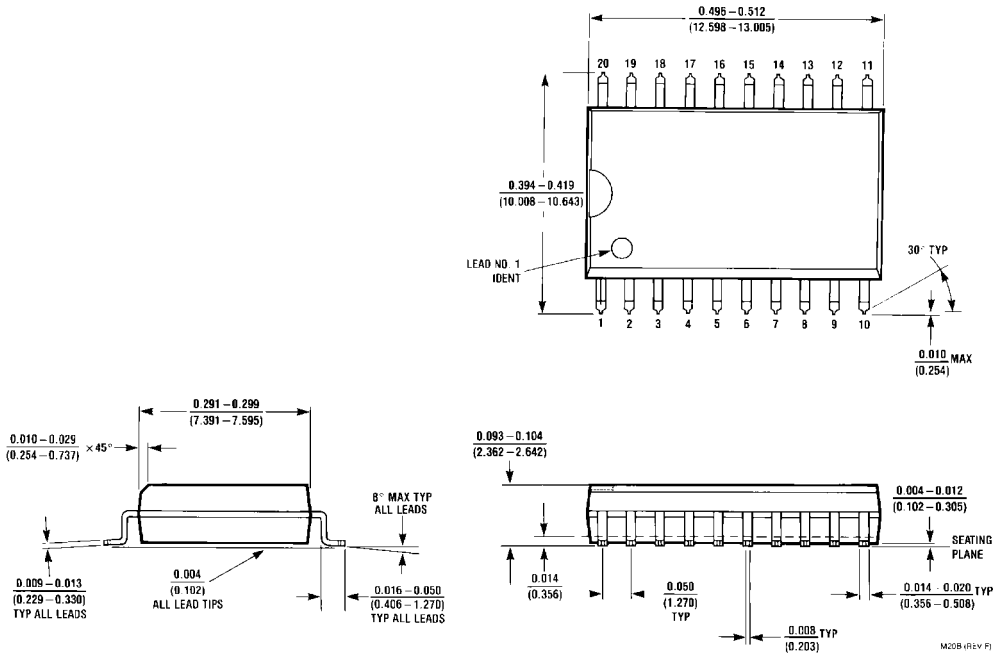

20-Lead Small Outline Integrated Circuit (SOIC), JEDEC MS-013, 0.300 Wide
Package Number M20B

Physical Dimensions inches (millimeters) unless otherwise noted (Continued)

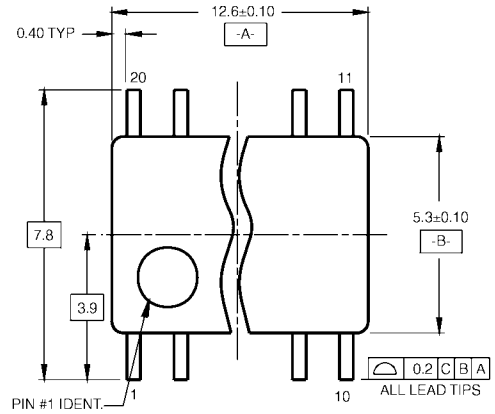

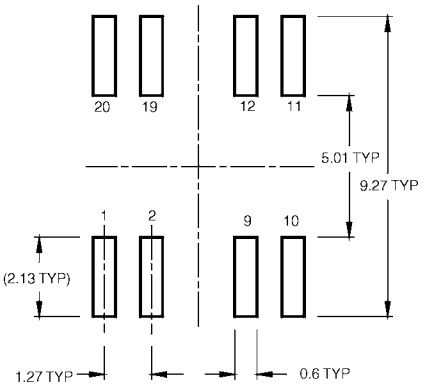

LAND PATTERN RECOMMENDATION

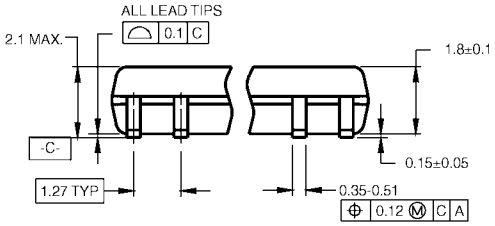

DIMENSIONS ARE IN MILLIMETERS

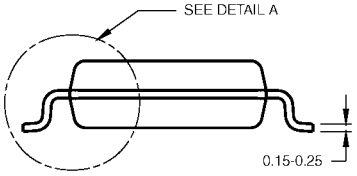

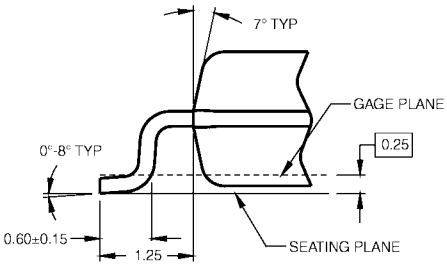

DETAIL A

NOTES:

A. CONFORMS TO EIAJ EDR-7320 REGISTRATION, ESTABLISHED IN DECEMBER, 1998.

B. DIMENSIONS ARE IN MILLIMETERS.

C. DIMENSIONS ARE EXCLUSIVE OF BURRS, MOLD FLASH, AND TIE BAR EXTRUSIONS.

M20DRevB1

20-Lead Small Outline Package (SOP), EIAJ TYPE II, 5.3mm Wide
Package Number M20D

Physical Dimensions inches (millimeters) unless otherwise noted (Continued)

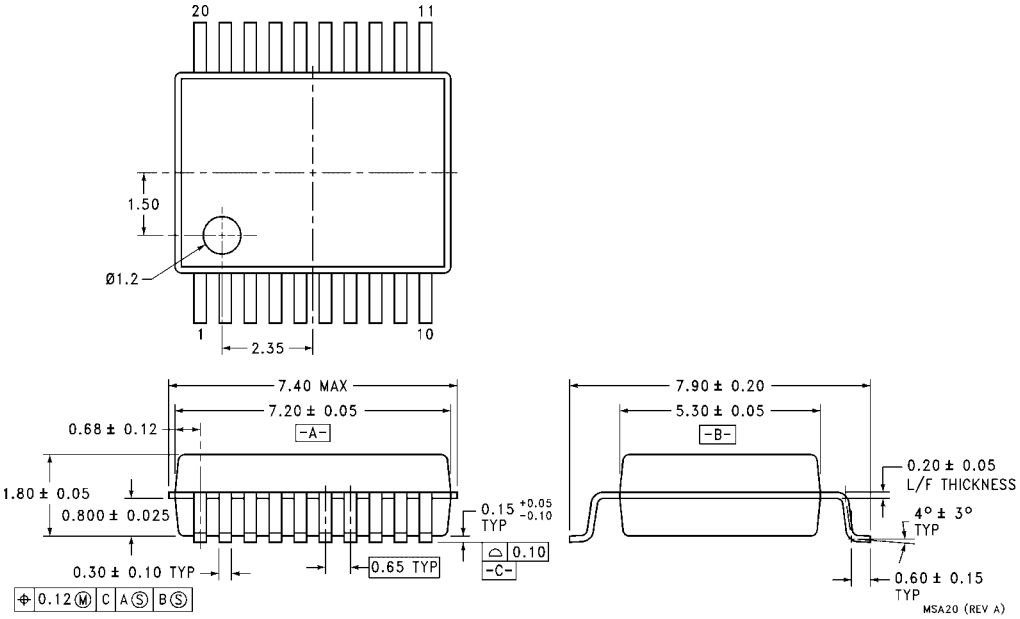

20-Lead Shrink Small Outline Package (SSOP), EIAJ TYPE II, 5.3mm Wide
Package Number MSA20

Physical Dimensions inches (millimeters) unless otherwise noted (Continued)

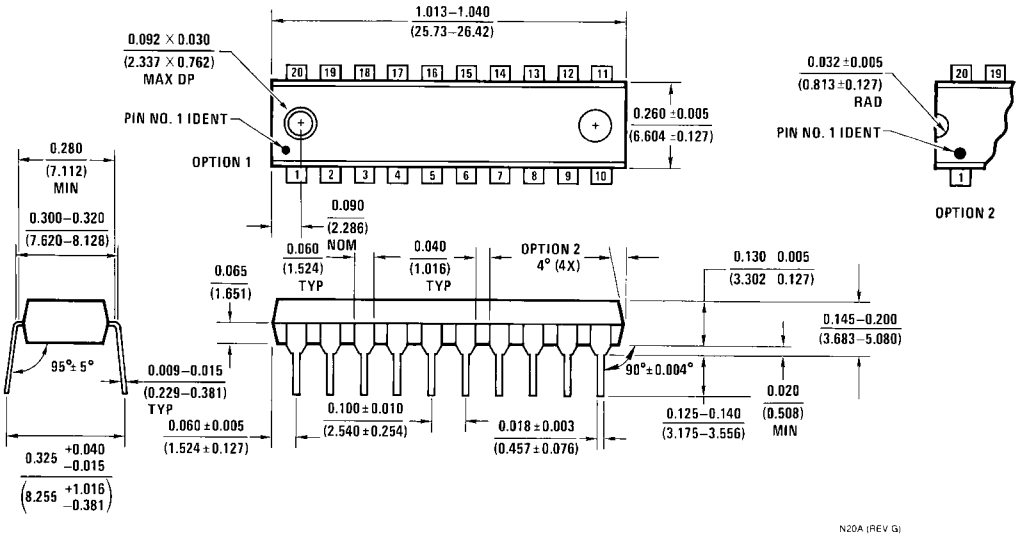

20-Lead Plastic Dual-In-Line Package (PDIP), JEDEC MS-001, 0.300 Wide
Package Number N20A

Fairchild does not assume any responsibility for use of any circuitry described, no circuit patent licenses are implied and Fairchild reserves the right at any time without notice to change said circuitry and specifications.

LIFE SUPPORT POLICY

FAIRCHILD'S PRODUCTS ARE NOT AUTHORIZED FOR USE AS CRITICAL COMPONENTS IN LIFE SUPPORT DEVICES OR SYSTEMS WITHOUT THE EXPRESS WRITTEN APPROVAL OF THE PRESIDENT OF FAIRCHILD SEMICONDUCTOR CORPORATION. As used herein:

1. Life support devices or systems are devices or systems which, (a) are intended for surgical implant into the body, or (b) support or sustain life, and (c) whose failure to perform when properly used in accordance with instructions for use provided in the labeling, can be reasonably expected to result in a significant injury to the user.
2. A critical component in any component of a life support device or system whose failure to perform can be reasonably expected to cause the failure of the life support device or system, or to affect its safety or effectiveness.

www.fairchildsemi.com

О компании

ООО "ТрейдЭлектроникс" - это оперативные поставки широкого спектра электронных компонентов отечественного и импортного производства напрямую от производителей и с крупнейших мировых складов. Реализуемая нашей компанией продукция насчитывает более полумиллиона наименований.

Благодаря этому наша компания предлагает к поставке практически не ограниченный ассортимент компонентов как оптовыми, мелкооптовыми партиями, так и в розницу.

Наличие собственной эффективной системы логистики обеспечивает надежную поставку продукции по конкурентным ценам в точно указанные сроки.

Срок поставки со стоков в **Европе и Америке – от 3 до 14 дней.**

Срок поставки из **Азии – от 10 дней.**

Благодаря развитой сети поставщиков, помогаем в поиске и приобретении экзотичных или снятых с производства компонентов.

Предоставляем спец цены на элементы для создания инженерных сэмплов.

Упорный труд, качественный результат дают нам право быть уверенными в себе и надежными для наших клиентов.

Наша компания это:

- Гарантия качества поставляемой продукции
- Широкий ассортимент
- Минимальные сроки поставок
- Техническая поддержка
- Подбор комплектации
- Индивидуальный подход
- Гибкое ценообразование

Наша организация особенно сильна в поставках модулей, микросхем, пассивных компонентов, ксайленсах (XC), EPF, EPM и силовой электроники.

Большой выбор предлагаемой продукции, различные виды оплаты и доставки, позволят Вам сэкономить время и получить максимум выгоды от сотрудничества с нами!

Trade Electronics.ru

гарантия бесперебойности производства и качества выпускаемой продукции

Перечень производителей, продукцию которых мы поставляем на российский рынок

AMD
ANALOG DEVICES
BOURNS
Coilcraft
élantec Semiconductor, Inc.
HARRIS
Infineon
JRC
MICREL
MOTOROLA
nichicon
PHILIPS
ROHM
SGS-THOMSON
Sipex
TAIYO YUDEN
TOKO
ZILOG
Winbond
Allegro
ATMEL
BURR - BROWN
EXAR
HITACHI
intel
Lattice
muRata
OKI
QUALCOMM
SAMSUNG
SHARP
SONY
TDK
TOSHIBA
KYOCERA
ALTERA
AVX
CITILYST
CYPRESS
FAIRCHILD SEMICONDUCTOR
HOLTEK
International IOR Rectifier
LINEAR TECHNOLOGY
MITSUBISHI
National Semiconductor
ON Semiconductor
REALTEK
SANYO
SHINDENGEN
SGS
TECCOR
TUNDRA
XILINX
Amphenol
Bay Linear
CIRRUS LOGIC
DALLAS
FUJITSU
IDT
intersil
MAXIM
molex
NEC
Panasonic
RENESAS
SII
SIEMENS
ST
Texas Instruments
VISHAY
ZETEX SEMICONDUCTORS

Trade Electronics.ru

гарантия бесперебойности производства и качества выпускаемой продукции

С удовольствием будем прорабатывать для Вас поставки всех необходимых компонентов по текущим запросам для скорейшего выявления групп элементов, по которым сотрудничество именно с нашей компанией будет для Вас максимально выгодным!

С уважением,

Менеджер отдела продаж ООО

«Трейд Электроникс»

Шишлаков Евгений

8 (495)668-30-28 доб 169

manager28@tradeelectronics.ru

http://www.tradeelectronics.ru/