CD54HC40105, CD74HC40105, CD54HCT40105, CD74HCT40105

Data sheet acquired from Harris Semiconductor
SCHS222C

February 1998 - Revised October 2003

High-Speed CMOS Logic 4-Bit x 16-Word FIFO Register

Features

- **Independent Asynchronous Inputs and Outputs**
- **Expandable in Either Direction**
- **Reset Capability**
- **Status Indicators on Inputs and Outputs**
- **Three-State Outputs**
- **Shift-Out Independent of Three-State Control**
- **Fanout (Over Temperature Range)**
  - **Standard Outputs . . . . . 10 LSTTL Loads**
  - **Bus Driver Outputs . . . . . 15 LSTTL Loads**
- **Wide Operating Temperature Range . . . -55°C to 125°C**
- **Balanced Propagation Delay and Transition Times**
- **Significant Power Reduction Compared to LSTTL Logic ICs**
- **HC Types**
  - **2V to 6V Operation**
  - **High Noise Immunity: N_{IL} = 30%, N_{IH} = 30% of V_{CC} at V_{CC} = 5V**
- **HCT Types**
  - **4.5V to 5.5V Operation**
  - **Direct LSTTL Input Logic Compatibility, V_{IL}= 0.8V (Max), V_{IH} = 2V (Min)**
  - **CMOS Input Compatibility, $I_I \leq 1\mu A$ at V_{OL}, V_{OH}**

Applications

- **Bit-Rate Smoothing**
- **CPU/Terminal Buffering**
- **Data Communications**
- **Peripheral Buffering**
- **Line Printer Input Buffers**
- **Auto-Dialers**
- **CRT Buffer Memories**
- **Radar Data Acquisition**

Description

The ’HC40105 and ’HCT40105 are high-speed silicon-gate CMOS devices that are compatible, except for “shift-out” circuitry, with the CD40105B. They are low-power first-in-out (FIFO) “elastic” storage registers that can store 16 four-bit words. The 40105 is capable of handling input and output data at different shifting rates. This feature makes it particularly useful as a buffer between asynchronous systems.

Each work position in the register is clocked by a control flip-flop, which stores a marker bit. A “1” signifies that the position’s data is filled and a “0” denotes a vacancy in that position. The control flip-flop detects the state of the preceding flip-flop and communicates its own status to the succeeding flip-flop. When a control flip-flop is in the “0” state and sees a “1” in the preceeding flip-flop, it generates a clock pulse that transfers data from the preceding four data latches into its own four data latches and resets the preceding flip-flop to “0”. The first and last control flip-flops have buffered outputs. Since all empty locations “bubble” automatically to the input end, and all valid data ripple through to the output end, the status of the first control flip-flop (DATA-IN READY) indicates if the FIFO is full, and the status of the last flip-flop (DATA-OUT READY) indicates if the FIFO contains data. As the earliest data are removed from the bottom of the data stack (the output end), all data entered later will automatically propagate (ripple) toward the output.

Ordering Information

PART NUMBER	TEMP. RANGE (^{o}C)	PACKAGE
CD54HC40105F3A	-55 to 125	16 Ld CERDIP
CD54HCT40105F3A	-55 to 125	16 Ld CERDIP
CD74HC40105E	-55 to 125	16 Ld PDIP
CD74HC40105M	-55 to 125	16 Ld SOIC
CD74HC40105MT	-55 to 125	16 Ld SOIC
CD74HC40105M96	-55 to 125	16 Ld SOIC
CD74HCT40105E	-55 to 125	16 Ld PDIP
CD74HCT40105M	-55 to 125	16 Ld SOIC
CD74HCT40105MT	-55 to 125	16 Ld SOIC
CD74HCT40105M96	-55 to 125	16 Ld SOIC

NOTE: When ordering, use the entire part number. The suffix 96 denotes tape and reel. The suffix T denotes a small-quantity reel of 250.

CAUTION: These devices are sensitive to electrostatic discharge. Users should follow proper IC Handling Procedures.

Copyright © 2003, Texas Instruments Incorporated

Pinout

CD54HC40105, CD54HCT40105
(CERDIP)
CD74HC40105, CD74HCT40105
(PDIP, SOIC)
TOP VIEW

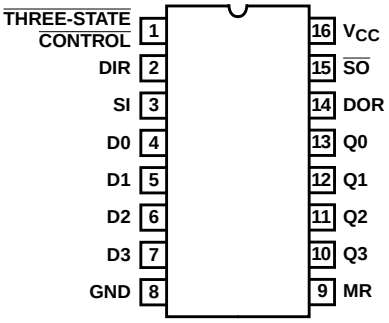

Loading Data

Data can be entered whenever the DATA-IN READY (DIR) flag is high, by a low to high transition on the SHIFT-IN (SI) input. This input must go low momentarily before the next word is accepted by the FIFO. The DIR flag will go low momentarily, until the data have been transferred to the second location. The flag will remain low when all 16-word locations are filled with valid data, and further pulses on the SI input will be ignored until DIR goes high.

Unloading Data

As soon as the first word has rippled to the output, the data-out ready output (DOR) goes HIGH and data of the first word is available on the outputs. Data of other words can be removed by a negative-going transition on the shift-out input ($\overline{SO}$). This negative-going transition causes the DOR signal to go LOW while the next word moves to the output. As long as valid data is available in the FIFO, the DOR signal will go high again, signifying that the next word is ready at the output. When the FIFO is empty, DOR will remain LOW, and any further commands will be ignored until a “1” marker ripples down to the last control register and DOR goes HIGH. If during unloading SI is HIGH, (FIFO is full) data on the data input of the FIFO is entered in the first location.

Master Reset

A high on the MASTER RESET (MR) sets all the control logic marker bits to “0”. DOR goes low and DIR goes high. The contents of the data register are not changed, only declared invalid, and will be superseded when the first word is loaded. Thus, MR does not clear data within the register but only the control logic. If the shift-in flag (SI) is HIGH during the master reset pulse, data present at the input (D0 to D3) are immediately moved into the first location upon completion of the reset process.

Three-State Outputs

In order to facilitate data busing, three-state outputs (Q0 to Q3) are provided on the data output lines, while the load condition of the register can be detected by the state of the DOR output. A HIGH on the three-state control flag (output enable input OE) forces the outputs into the high-impedance OFF-state mode. Note that the shift-out signal, unlike that in the CD40105B, is independent of the three-state output control. In the CD40105B, the three-state control must not be shifted from High to Low when the shift-out signal is Low (data loss would occur). In the high-speed CMOS version this restriction has been eliminated.

Cascading

The 40105 can be cascaded to form longer registers simply by connecting the DIR to SO and DOR to SI. In the cascaded mode, a MASTER RESET pulse must be applied after the supply voltage is turned on. For words wider than four bits, the DIR and the DOR outputs must be gated together with AND gates. Their outputs drive the SI and SO inputs in parallel, if expanding is done in both directions (see Figures 12 and 13).

Functional Diagram

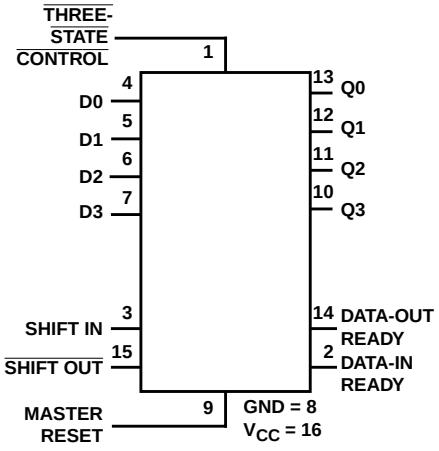

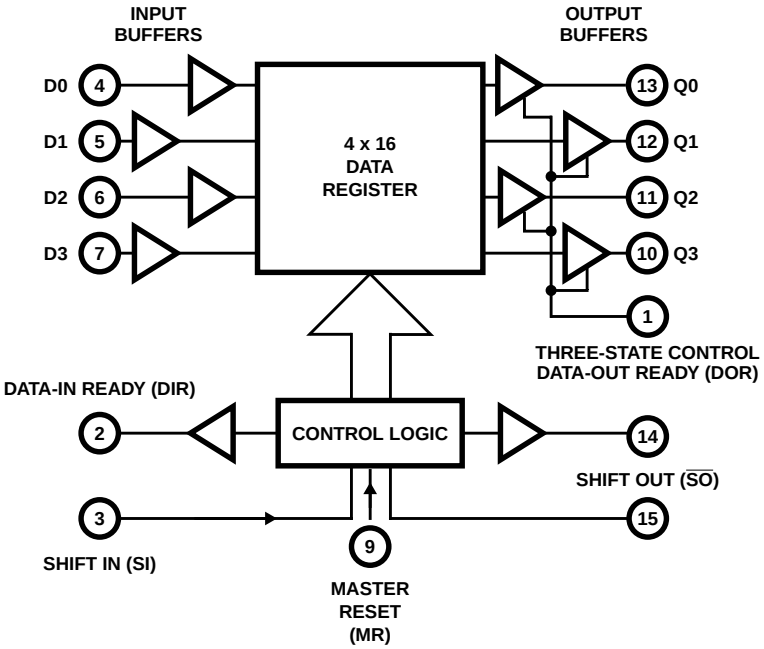

FIGURE 1. FUNCTIONAL BLOCK DIAGRAM

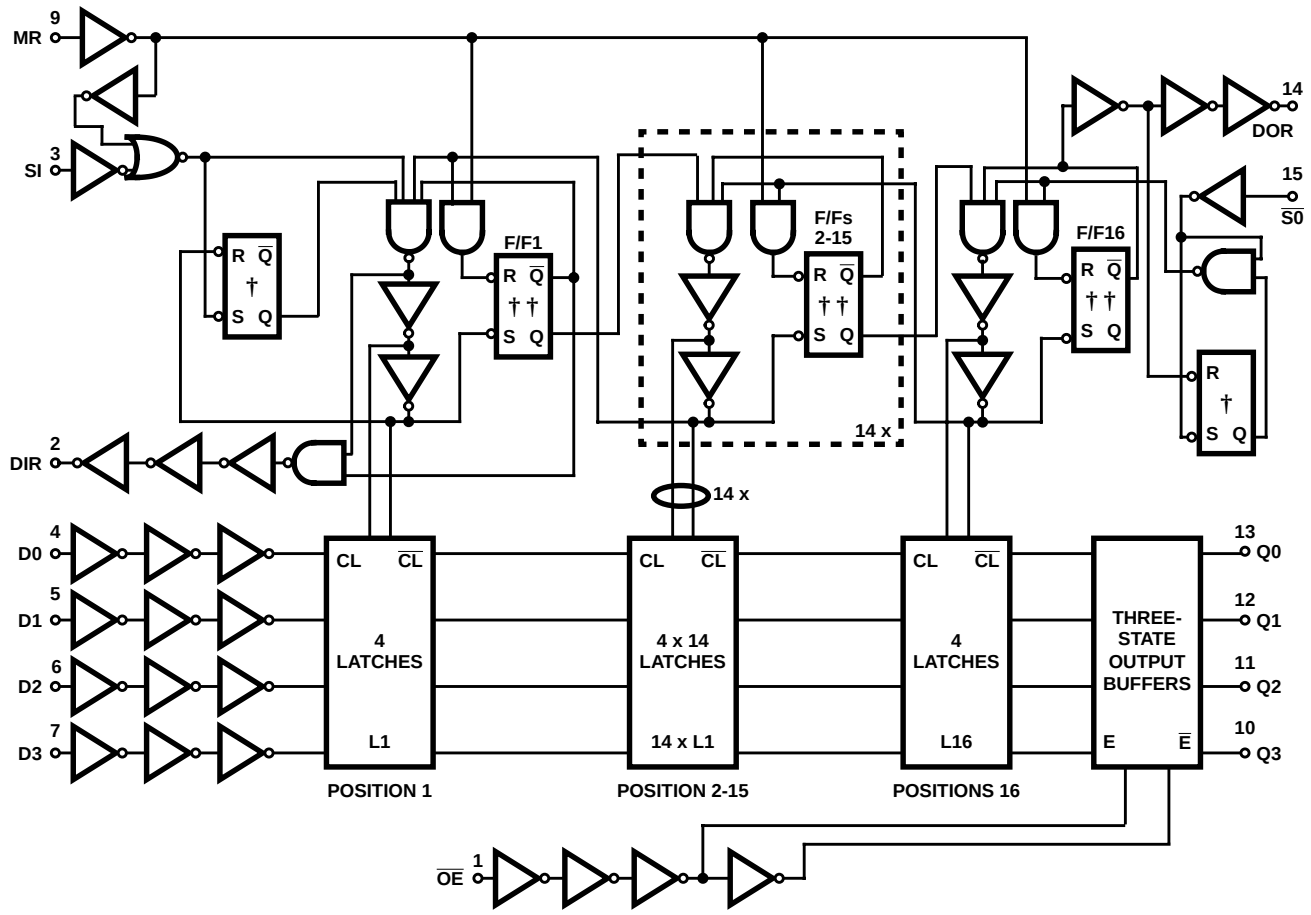

† "S" overrides "R".
†† "R" overrides "S".

FIGURE 2. LOGIC DIAGRAM

Absolute Maximum Ratings

DC Supply Voltage, V_{CC} . . . . . -0.5V to 7V
DC Input Diode Current, I_{IK}
For V_I < -0.5V or V_I > V_{CC} + 0.5V . . . . . ±20mA
DC Output Diode Current, I_{OK}
For V_O < -0.5V or V_O > V_{CC} + 0.5V . . . . . ±20mA
DC Output Source or Sink Current per Output Pin, I_O
For V_O > -0.5V or V_O < V_{CC} + 0.5V . . . . . ±25mA
DC V_{CC} or Ground Current, I_{CC} . . . . . ±50mA

Operating Conditions

Temperature Range (T_A) . . . . . -55°C to 125°C
Supply Voltage Range, V_{CC}
HC Types . . . . . 2V to 6V
HCT Types . . . . . 4.5V to 5.5V
DC Input or Output Voltage, V_I, V_O . . . . . 0V to V_{CC}
Input Rise and Fall Time
2V . . . . . 1000ns (Max)
4.5V. . . . . 500ns (Max)
6V . . . . . 400ns (Max)

Thermal Information

Thermal Resistance (Typical, Note 1) θ_{JA} (^{o}C/W)
E (PDIP) Package 67
M (SOIC) Package. 73
Maximum Junction Temperature . . . . . 150°C
Maximum Storage Temperature Range . . . . . -65°C to 150°C
Maximum Lead Temperature (Soldering 10s) . . . . . 300°C
(SOIC - Lead Tips Only)

CAUTION: Stresses above those listed in "Absolute Maximum Ratings" may cause permanent damage to the device. This is a stress only rating and operation of the device at these or any other conditions above those indicated in the operational sections of this specification is not implied.

NOTE:

1. The package thermal impedance is calculated in accordance with JESD 51-7.

DC Electrical Specifications

PARAMETER	SYMBOL	TEST CONDITIONS V_I (V)	TEST CONDITIONS I_O (mA)	V_{CC} (V)	25°C MIN	25°C TYP	25°C MAX	-40°C TO 85°C MIN	-40°C TO 85°C MAX	-55°C TO 125°C MIN	-55°C TO 125°C MAX	UNITS
HC TYPES												
High Level Input Voltage	V_{IH}	-	-	2	1.5	-	-	1.5	-	1.5	-	V
				4.5	3.15	-	-	3.15	-	3.15	-	V
				6	4.2	-	-	4.2	-	4.2	-	V
Low Level Input Voltage	V_{IL}	-	-	2	-	-	0.5	-	0.5	-	0.5	V
				4.5	-	-	1.35	-	1.35	-	1.35	V
				6	-	-	1.8	-	1.8	-	1.8	V
High Level Output Voltage CMOS Loads	V_{OH}	V_{IH} or V_{IL}	-0.02	2	1.9	-	-	1.9	-	1.9	-	V
			-0.02	4.5	4.4	-	-	4.4	-	4.4	-	V
			-0.02	6	5.9	-	-	5.9	-	5.9	-	V
High Level Output Voltage TTL Loads			-	-	-	-	-	-	-	-	-	V
			-4	4.5	3.98	-	-	3.84	-	3.7	-	V
			-5.2	6	5.48	-	-	5.34	-	5.2	-	V
Low Level Output Voltage CMOS Loads	V_{OL}	V_{IH} or V_{IL}	0.02	2	-	-	0.1	-	0.1	-	0.1	V
			0.02	4.5	-	-	0.1	-	0.1	-	0.1	V
			0.02	6	-	-	0.1	-	0.1	-	0.1	V
Low Level Output Voltage TTL Loads			-	-	-	-	-	-	-	-	-	V
			4	4.5	-	-	0.26	-	0.33	-	0.4	V
			5.2	6	-	-	0.26	-	0.33	-	0.4	V
Input Leakage Current	I_I	V_{CC} or GND	-	6	-	-	±0.1	-	±1	-	±1	µA
Quiescent Device Current	I_{CC}	V_{CC} or GND	0	6	-	-	8	-	80	-	160	µA

DC Electrical Specifications (Continued)

PARAMETER	SYMBOL	TEST CONDITIONS V_I (V)	TEST CONDITIONS I_O (mA)	V_{CC} (V)	25°C MIN	25°C TYP	25°C MAX	-40°C TO 85°C MIN	-40°C TO 85°C MAX	-55°C TO 125°C MIN	-55°C TO 125°C MAX	UNITS
Three-State Leakage Current	I_{OZ}	V_{IL} or V_{IH}	V_O = V_{CC} or GND	6	-	-	±0.5	-	±5	-	±10	µA
HCT TYPES												
High Level Input Voltage	V_{IH}	-	-	4.5 to 5.5	2	-	-	2	-	2	-	V
Low Level Input Voltage	V_{IL}	-	-	4.5 to 5.5	-	-	0.8	-	0.8	-	0.8	V
High Level Output Voltage CMOS Loads	V_{OH}	V_{IH} or V_{IL}	-0.02	4.5	4.4	-	-	4.4	-	4.4	-	V
High Level Output Voltage TTL Loads			-4	4.5	3.98	-	-	3.84	-	3.7	-	V
Low Level Output Voltage CMOS Loads	V_{OL}	V_{IH} or V_{IL}	0.02	4.5	-	-	0.1	-	0.1	-	0.1	V
Low Level Output Voltage TTL Loads			4	4.5	-	-	0.26	-	0.33	-	0.4	V
Input Leakage Current	I_I	V_{CC} and GND	0	5.5	-	-	±0.1	-	±1	-	±1	µA
Quiescent Device Current	I_{CC}	V_{CC} or GND	0	5.5	-	-	8	-	80	-	160	µA
Three-State Leakage Current	I_{OZ}	V_{IL} or V_{IH}	V_O = V_{CC} or GND	5.5	-	-	±0.5	-	±5	-	±10	µA
Additional Quiescent Device Current Per Input Pin: 1 Unit Load	ΔI_{CC} (Note 2)	V_{CC} -2.1	-	4.5 to 5.5	-	100	360	-	450	-	490	µA

NOTE:

2. For dual-supply systems theoretical worst case (V_I = 2.4V, V_{CC} = 5.5V) specification is 1.8mA.

HCT Input Loading Table

INPUT	UNIT LOADS
$\overline{OE}$	0.75
SI, $\overline{SO}$	0.4
Dn	0.3
MR	1.5

NOTE: Unit Load is ΔI_{CC} limit specified in DC Electrical Table, e.g., 360µA max at 25°C.

Prerequisite for Switching Specifications

PARAMETER	SYMBOL	V_{CC} (V)	25°C		-40°C TO 85°C		-55°C TO 125°C		UNITS
			MIN	MAX	MIN	MAX	MIN	MAX	
HC TYPES									
SI Pulse Width HIGH or LOW	t_W	2	80	-	100	-	120	-	ns
		4.5	16	-	20	-	24	-	ns
		6	14	-	17	-	20	-	ns
$\overline{SO}$ Pulse Width HIGH or LOW	t_W	2	120	-	150	-	180	-	ns
		4.5	24	-	30	-	36	-	ns
		6	20	-	26	-	31	-	ns
DIR Pulse Width HIGH or LOW	t_W	2	200	-	250	-	300	-	ns
		4.5	40	-	50	-	60	-	ns
		6	34	-	43	-	51	-	ns
DOR Pulse Width HIGH or LOW	t_W	2	200	-	250	-	300	-	ns
		4.5	40	-	50	-	60	-	ns
		6	34	-	43	-	51	-	ns
MR Pulse Width HIGH	t_W	2	120	-	150	-	180	-	ns
		4.5	24	-	30	-	36	-	ns
		6	20	-	26	-	31	-	ns
Removal Time MR to SI	t_{REM}	2	50	-	65	-	75	-	ns
		4.5	10	-	13	-	15	-	ns
		6	9	-	11	-	13	-	ns
Set-Up Time Dn to SI	t_{SU}	2	5	-	5	-	5	-	ns
		4.5	5	-	5	-	5	-	ns
		6	5	-	5	-	5	-	ns
Hold Time Dn to SI	t_H	2	125	-	155	-	190	-	ns
		4.5	25	-	31	-	38	-	ns
		6	21	-	26	-	32	-	ns
Maximum Pulse Frequency SI, $\overline{SO}$	f_{MAX}	2	3	-	2	-	2	-	MHz
		4.5	15	-	12	-	10	-	MHz
		6	18	-	14	-	12	-	MHz
HCT TYPES									
SI Pulse Width HIGH or LOW	t_W	4.5	16	-	20	-	24	-	ns
$\overline{SO}$ Pulse Width HIGH or LOW	t_W	4.5	16	-	20	-	24	-	ns
DIR Pulse Width HIGH or LOW	t_W	4.5	40	-	50	-	60	-	ns
DOR Pulse Width HIGH or LOW	t_W	4.5	40	-	50	-	60	-	ns
MR Pulse Width HIGH	t_W	4.5	24	-	30	-	36	-	ns
Removal Time MR to SI	t_{REM}	4.5	15	-	19	-	22	-	ns
Set-Up Time Dn to SI	t_{SU}	4.5	0	-	0	-	0	-	ns
Hold Time Dn to SI	t_H	4.5	25	-	31	-	38	-	ns
Maximum Pulse Frequency SI, $\overline{SO}$	f_{MAX}	4.5	15	-	12	-	10	-	MHz

Switching Specifications Input t_r, t_f = 6ns

PARAMETER	SYMBOL	TEST CONDITIONS	V_{CC} (V)	25°C			-40°C TO 85°C		-55°C TO 125°C		UNITS
				MIN	TYP	MAX	MIN	MAX	MIN	MAX	
HC TYPES											
Propagation Delay MR to DIR, DOR	t_{PHL}, t_{PLH}	C_L = 50pF	2	-	-	175	-	220	-	265	ns
		C_L = 50pF	4.5	-	-	35	-	44	-	53	ns
		C_L = 15pF	5	-	15	-	-	-	-	-	ns
		C_L = 50pF	6	-	-	30	-	37	-	45	ns
SI to DIR	t_{PHL}, t_{PLH}	C_L = 50pF	2	-	-	210	-	265	-	315	ns
		C_L = 50pF	4.5	-	-	42	-	53	-	63	ns
		C_L = 15pF	5	-	18	-	-	-	-	-	ns
		C_L = 50pF	6	-	-	36	-	45	-	54	ns
$\overline{SO}$ to DOR	t_{PHL}, t_{PLH}	C_L = 50pF	2	-	-	210	-	265	-	315	ns
		C_L = 50pF	4.5	-	-	42	-	53	-	63	ns
		C_L = 15pF	5	-	18	-	-	-	-	-	ns
		C_L = 50pF	6	-	-	36	-	45	-	54	ns
$\overline{SO}$ to Qn	t_{PHL}, t_{PLH}	C_L = 50pF	2	-	-	400	-	500	-	600	ns
		C_L = 50pF	4.5	-	-	80	-	100	-	120	ns
		C_L = 15pF	5	-	35	-	-	-	-	-	ns
		C_L = 50pF	6	-	-	68	-	85	-	102	ns
Propagation Delay/Ripple thru Delay SI to DOR	t_{PLH}	C_L = 50pF	2	-	-	2000	-	2500	-	3000	ns
			4.5	-	-	400	-	500	-	600	ns
			6	-	-	340	-	425	-	510	ns
Propagation Delay/Ripple thru Delay $\overline{SO}$ to DIR	t_{PLH}	C_L = 50pF	2	-	-	2500	-	3125	-	3750	ns
			4.5	-	-	500	-	625	-	750	ns
			6	-	-	425	-	532	-	638	ns
Propagation Delay/Ripple thru Delay SI to Qn	t_{PLH}	C_L = 50pF	2	-	-	1500	-	1900	-	2250	ns
			4.5	-	-	300	-	380	-	450	ns
			6	-	-	260	-	330	-	380	ns
Three-State Output Enable $\overline{OE}$ to Q_n	t_{PZH}, t_{PZL}	C_L = 50pF	2	-	-	150	-	190	-	225	ns
			4.5	-	-	30	-	38	-	45	ns
			6	-	-	26	-	33	-	38	ns
Three-State Output Disable $\overline{OE}$ to Qn	t_{PHZ}, t_{PLZ}	C_L = 50pF	2	-	-	140	-	175	-	210	ns
		C_L = 50pF	4.5	-	-	28	-	35	-	42	ns
		C_L = 50pF	6	-	-	24	-	30	-	36	ns
Output Transition Time	t_{TLH}, t_{THL}	C_L = 50pF	2	-	-	75	-	95	-	110	ns
			4.5	-	-	15	-	19	-	22	ns
			6	-	-	13	-	16	-	19	ns
Maximum SI, $\overline{SO}$ Frequency	f_{MAX}	C_L = 15pF	5	-	32	-	-	-	-	-	MHz
Input Capacitance	C_{IN}	C_L = 50pF	-	-	-	10	-	10	-	10	pF
Power Dissipation Capacitance (Notes 3, 4)	C_{PD}	C_L = 15pF	5	-	83	-	-	-	-	-	pF

Switching Specifications Input t_r, t_f = 6ns **(Continued)**

PARAMETER	SYMBOL	TEST CONDITIONS	V_{CC} (V)	25°C			-40°C TO 85°C		-55°C TO 125°C		UNITS
				MIN	TYP	MAX	MIN	MAX	MIN	MAX	
Three-State Output Capacitance	C_O	C_L = 50pF	-	-	-	15	-	15	-	15	pF
HCT TYPES											
Propagation Delay Time	t_{PLH}, t_{PHL}	C_L = 50pF	4.5	-	-	36	-	45	-	54	ns
MR to DIR, DOR		C_L = 15pF	5	-	15	-	-	-	-	-	ns
SI to DIR	t_{PLH}, t_{PHL}	C_L = 50pF	4.5	-	-	42	-	53	-	63	ns
		C_L =15pF	5	-	18	-	-	-	-	-	ns
$\overline{SO}$ to DOR	t_{PLH}, t_{PHL}	C_L = 50pF	4.5	-	-	42	-	53	-	63	ns
		C_L =15pF	5	-	18	-	-	-	-	-	ns
$\overline{SO}$ to Qn	t_{PLH}, t_{PHL}	C_L = 50pF	4.5	-	-	80	-	100	-	120	ns
		C_L =15pF	5	-	35	-	-	-	-	-	ns
Propagation Delay/Ripple thru Delay SI to DOR	t_{PLH}	C_L = 50pF	4.5	-	-	400	-	500	-	600	ns
Propagation Delay/Ripple thru Delay $\overline{SO}$ to DIR	t_{PLH}	C_L = 50pF	4.5	-	-	500	-	625	-	750	ns
Propagation Delay/Ripple thru Delay SI to Qn	t_{PLH}	C_L = 50pF	4.5	-	-	300	-	380	-	450	ns
Three-State Output Enable $\overline{OE}$ to Q_n	t_{PZH}, t_{PZL}	C_L = 50pF	4.5	-	-	35	-	44	-	53	ns
Three-State Output Disable $\overline{OE}$ to Qn	t_{PHZ}, t_{PLZ}	C_L = 50pF	4.5	-	-	30	-	38	-	45	ns
Output Transition Time	t_{TLH}, t_{THL}	C_L = 50pF	4.5	-	-	15	-	19	-	22	ns
Maximum CP Frequency	f_{MAX}	C_L =15pF	5	-	32	-	-	-	-	-	MHz
Input Capacitance	C_{IN}	C_L = 50pF	-	-	-	10	-	10	-	10	pF
Power Dissipation Capacitance (Notes 3, 4)	C_{PD}	C_L =15pF	5	-	83	-	-	-	-	-	pF
Three-State Output Capacitance	C_O	C_L = 50pF	-	-	-	15	-	15	-	15	pF

NOTES:

3. C_{PD} is used to determine the dynamic power consumption, per package.
4. $P_D = C_{PD} V_{CC}^2 f_i + \Sigma (C_L V_{CC}^2 f_o)$ where f_i = Input Frequency, f_o = Output Frequency, C_L = Output Load Capacitance, V_{CC} = Supply Voltage.

Test Circuits and Waveforms

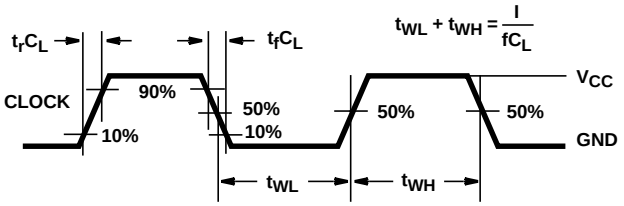

NOTE: Outputs should be switching from 10% V_{CC} to 90% V_{CC} in accordance with device truth table. For f_{MAX}, input duty cycle = 50%.

FIGURE 3. HC CLOCK PULSE RISE AND FALL TIMES AND PULSE WIDTH

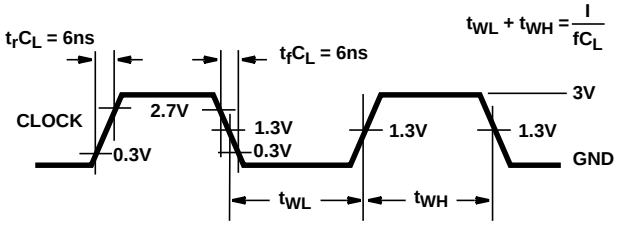

NOTE: Outputs should be switching from 10% V_{CC} to 90% V_{CC} in accordance with device truth table. For f_{MAX}, input duty cycle = 50%.

FIGURE 4. HCT CLOCK PULSE RISE AND FALL TIMES AND PULSE WIDTH

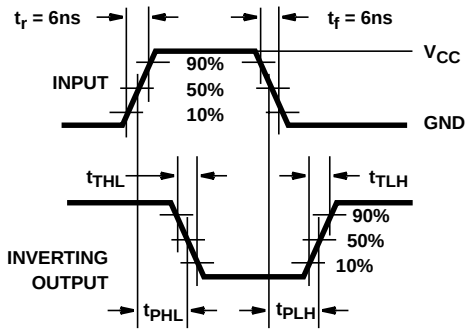

FIGURE 5. HC TRANSITION TIMES AND PROPAGATION DELAY TIMES, COMBINATION LOGIC

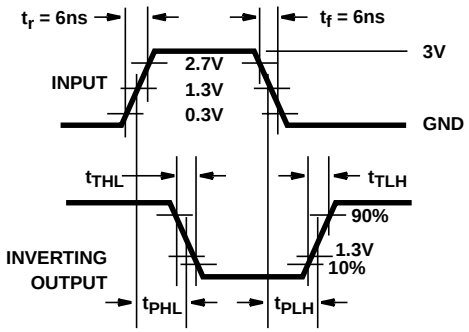

FIGURE 6. HCT TRANSITION TIMES AND PROPAGATION DELAY TIMES, COMBINATION LOGIC

Test Circuits and Waveforms (Continued)

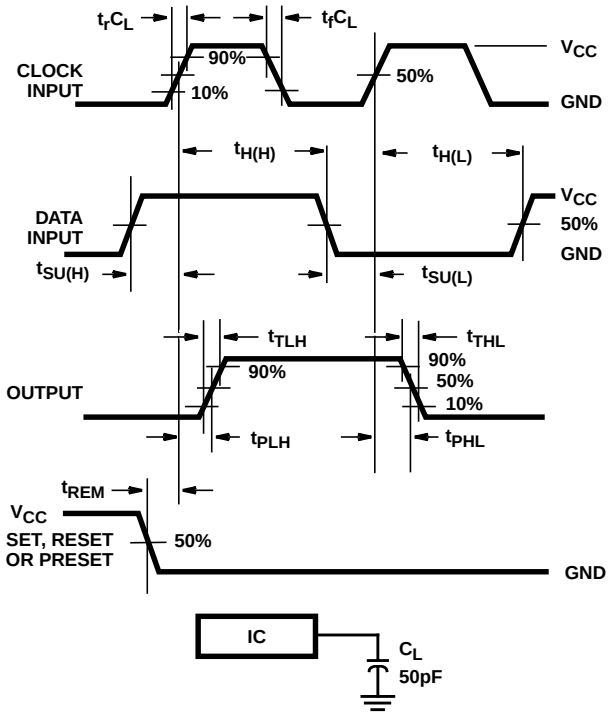

FIGURE 7. HC SETUP TIMES, HOLD TIMES, REMOVAL TIME, AND PROPAGATION DELAY TIMES FOR EDGE TRIGGERED SEQUENTIAL LOGIC CIRCUITS

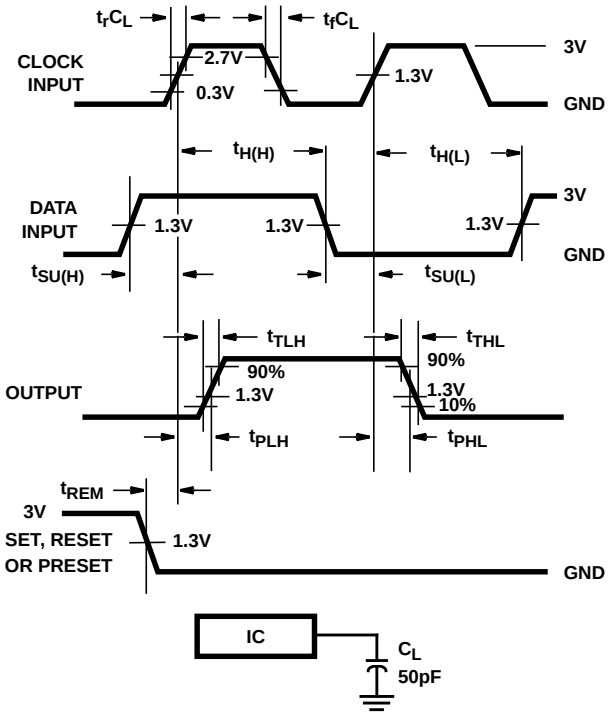

FIGURE 8. HCT SETUP TIMES, HOLD TIMES, REMOVAL TIME, AND PROPAGATION DELAY TIMES FOR EDGE TRIGGERED SEQUENTIAL LOGIC CIRCUITS

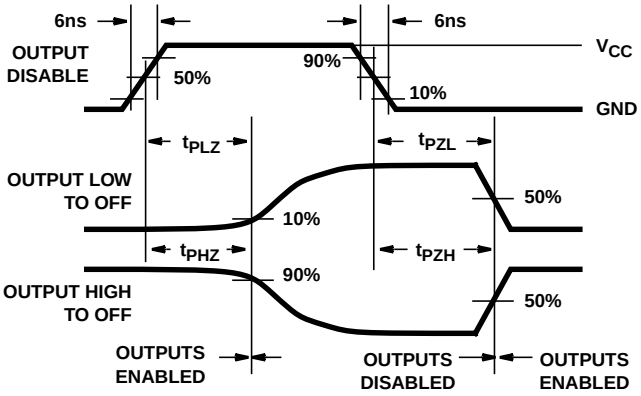

FIGURE 9. HC THREE-STATE PROPAGATION DELAY WAVEFORM

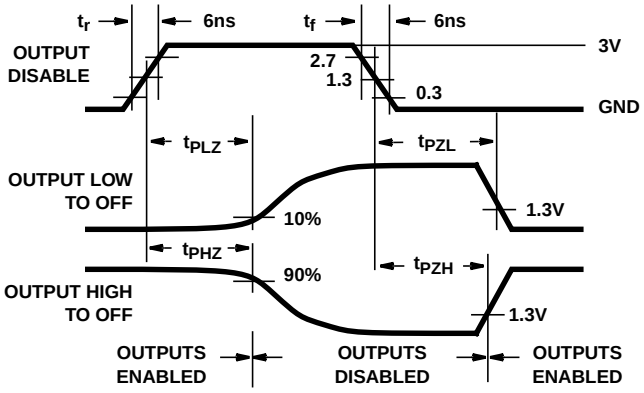

FIGURE 10. HCT THREE-STATE PROPAGATION DELAY WAVEFORM

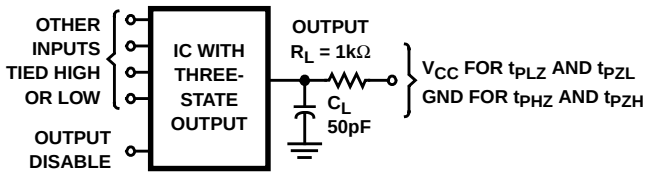

NOTE: Open drain waveforms t_{PLZ} and t_{PZL} are the same as those for three-state shown on the left. The test circuit is Output R_L = 1kΩ to V_{CC}, C_L = 50pF.

FIGURE 11. HC AND HCT THREE-STATE PROPAGATION DELAY TEST CIRCUIT

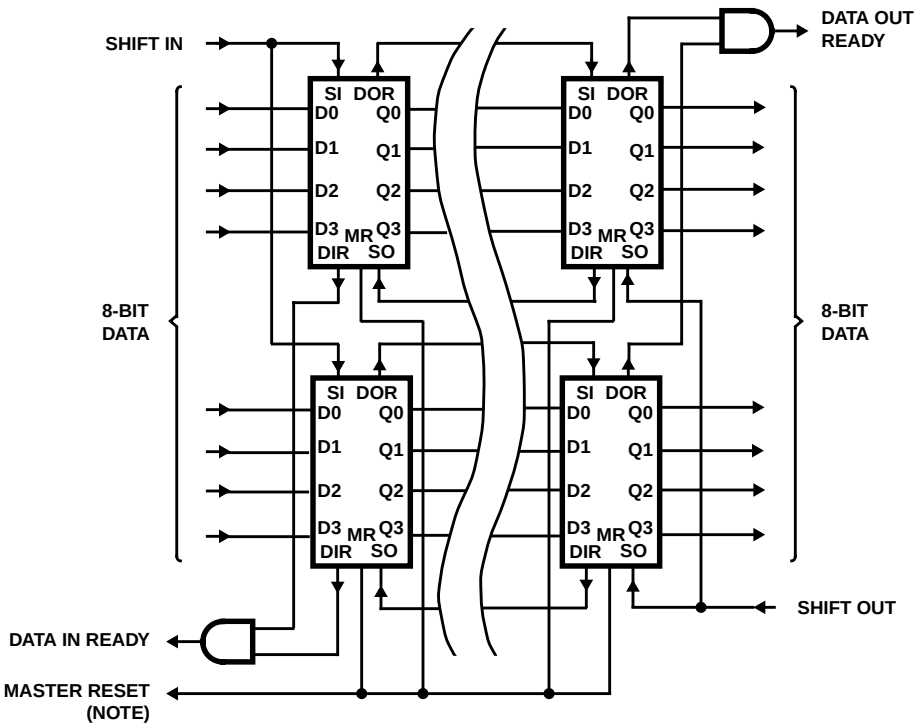

NOTE: Pulse must be applied for cascading by 16 N bits.

FIGURE 12. EXPANSION, 8-BITS WIDE BY 16 N-BITS LONG USING HC/HCT40105

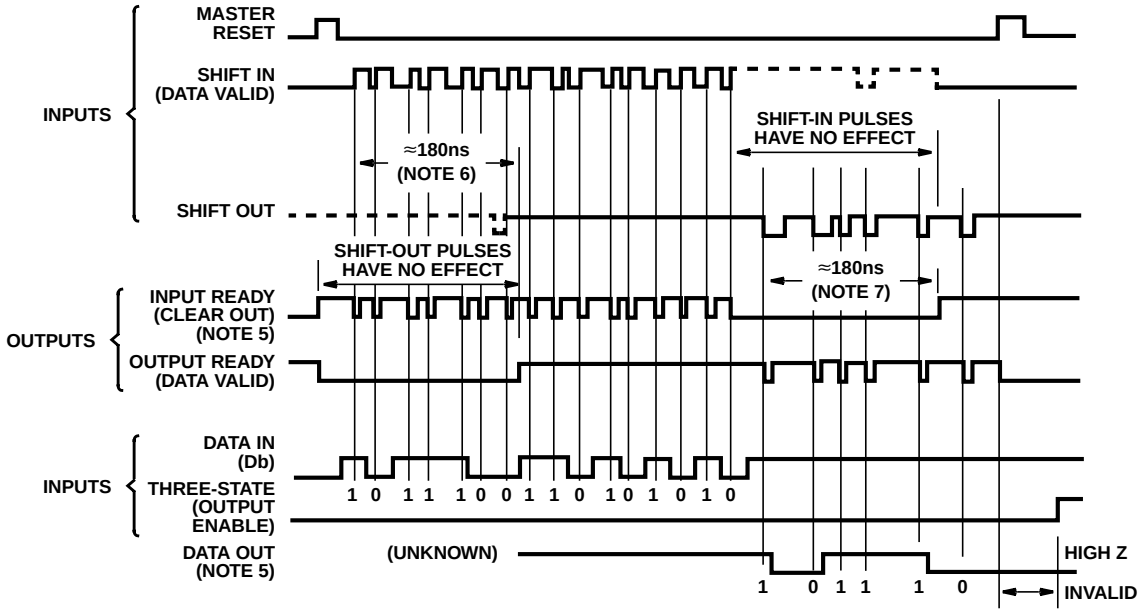

NOTES:

5. Data valid goes to high level in advance of the data out by a maximum of 38ns at V_{CC} = 4.5V for C_L = 50pF and T_A = 25°C.
6. At V_{CC} = 4.5V, ripple time from position 1 to position 16.
7. At V_{CC} = 4.5V, ripple time from position 16 to position 1.

FIGURE 13. TIMING DIAGRAM FOR THE CD74HC/HCT40105

PACKAGING INFORMATION

Orderable Device	Status [1]	Package Type	Package Drawing	Pins	Package Qty	Eco Plan [2]	Lead/Ball Finish	MSL Peak Temp [3]
CD54HC40105F3A	ACTIVE	CDIP	J	16	1	TBD	A42	N / A for Pkg Type
CD54HCT40105F3A	ACTIVE	CDIP	J	16	1	TBD	A42	N / A for Pkg Type
CD74HC40105E	ACTIVE	PDIP	N	16	25	Pb-Free (RoHS)	CU NIPDAU	N / A for Pkg Type
CD74HC40105EE4	ACTIVE	PDIP	N	16	25	Pb-Free (RoHS)	CU NIPDAU	N / A for Pkg Type
CD74HC40105M	ACTIVE	SOIC	D	16	40	Green (RoHS & no Sb/Br)	CU NIPDAU	Level-1-260C-UNLIM
CD74HC40105M96	ACTIVE	SOIC	D	16	2500	Green (RoHS & no Sb/Br)	CU NIPDAU	Level-1-260C-UNLIM
CD74HC40105M96E4	ACTIVE	SOIC	D	16	2500	Green (RoHS & no Sb/Br)	CU NIPDAU	Level-1-260C-UNLIM
CD74HC40105M96G4	ACTIVE	SOIC	D	16	2500	Green (RoHS & no Sb/Br)	CU NIPDAU	Level-1-260C-UNLIM
CD74HC40105ME4	ACTIVE	SOIC	D	16	40	Green (RoHS & no Sb/Br)	CU NIPDAU	Level-1-260C-UNLIM
CD74HC40105MG4	ACTIVE	SOIC	D	16	40	Green (RoHS & no Sb/Br)	CU NIPDAU	Level-1-260C-UNLIM
CD74HC40105MT	ACTIVE	SOIC	D	16	250	Green (RoHS & no Sb/Br)	CU NIPDAU	Level-1-260C-UNLIM
CD74HC40105MTE4	ACTIVE	SOIC	D	16	250	Green (RoHS & no Sb/Br)	CU NIPDAU	Level-1-260C-UNLIM
CD74HC40105MTG4	ACTIVE	SOIC	D	16	250	Green (RoHS & no Sb/Br)	CU NIPDAU	Level-1-260C-UNLIM
CD74HCT40105E	ACTIVE	PDIP	N	16	25	Pb-Free (RoHS)	CU NIPDAU	N / A for Pkg Type
CD74HCT40105EE4	ACTIVE	PDIP	N	16	25	Pb-Free (RoHS)	CU NIPDAU	N / A for Pkg Type
CD74HCT40105M	ACTIVE	SOIC	D	16	40	Green (RoHS & no Sb/Br)	CU NIPDAU	Level-1-260C-UNLIM
CD74HCT40105M96	ACTIVE	SOIC	D	16	2500	Green (RoHS & no Sb/Br)	CU NIPDAU	Level-1-260C-UNLIM
CD74HCT40105M96E4	ACTIVE	SOIC	D	16	2500	Green (RoHS & no Sb/Br)	CU NIPDAU	Level-1-260C-UNLIM
CD74HCT40105M96G4	ACTIVE	SOIC	D	16	2500	Green (RoHS & no Sb/Br)	CU NIPDAU	Level-1-260C-UNLIM
CD74HCT40105ME4	ACTIVE	SOIC	D	16	40	Green (RoHS & no Sb/Br)	CU NIPDAU	Level-1-260C-UNLIM
CD74HCT40105MG4	ACTIVE	SOIC	D	16	40	Green (RoHS & no Sb/Br)	CU NIPDAU	Level-1-260C-UNLIM
CD74HCT40105MT	ACTIVE	SOIC	D	16	250	Green (RoHS & no Sb/Br)	CU NIPDAU	Level-1-260C-UNLIM
CD74HCT40105MTE4	ACTIVE	SOIC	D	16	250	Green (RoHS & no Sb/Br)	CU NIPDAU	Level-1-260C-UNLIM
CD74HCT40105MTG4	ACTIVE	SOIC	D	16	250	Green (RoHS & no Sb/Br)	CU NIPDAU	Level-1-260C-UNLIM

[1] The marketing status values are defined as follows:
ACTIVE: Product device recommended for new designs.
LIFEBUY: TI has announced that the device will be discontinued, and a lifetime-buy period is in effect.

NRND: Not recommended for new designs. Device is in production to support existing customers, but TI does not recommend using this part in a new design.
PREVIEW: Device has been announced but is not in production. Samples may or may not be available.
OBSOLETE: TI has discontinued the production of the device.

(2) Eco Plan - The planned eco-friendly classification: Pb-Free (RoHS), Pb-Free (RoHS Exempt), or Green (RoHS & no Sb/Br) - please check http://www.ti.com/productcontent for the latest availability information and additional product content details.
TBD: The Pb-Free/Green conversion plan has not been defined.
Pb-Free (RoHS): TI's terms "Lead-Free" or "Pb-Free" mean semiconductor products that are compatible with the current RoHS requirements for all 6 substances, including the requirement that lead not exceed 0.1% by weight in homogeneous materials. Where designed to be soldered at high temperatures, TI Pb-Free products are suitable for use in specified lead-free processes.
Pb-Free (RoHS Exempt): This component has a RoHS exemption for either 1) lead-based flip-chip solder bumps used between the die and package, or 2) lead-based die adhesive used between the die and leadframe. The component is otherwise considered Pb-Free (RoHS compatible) as defined above.
Green (RoHS & no Sb/Br): TI defines "Green" to mean Pb-Free (RoHS compatible), and free of Bromine (Br) and Antimony (Sb) based flame retardants (Br or Sb do not exceed 0.1% by weight in homogeneous material)

(3) MSL, Peak Temp. -- The Moisture Sensitivity Level rating according to the JEDEC industry standard classifications, and peak solder temperature.

Important Information and Disclaimer: The information provided on this page represents TI's knowledge and belief as of the date that it is provided. TI bases its knowledge and belief on information provided by third parties, and makes no representation or warranty as to the accuracy of such information. Efforts are underway to better integrate information from third parties. TI has taken and continues to take reasonable steps to provide representative and accurate information but may not have conducted destructive testing or chemical analysis on incoming materials and chemicals. TI and TI suppliers consider certain information to be proprietary, and thus CAS numbers and other limited information may not be available for release.

In no event shall TI's liability arising out of such information exceed the total purchase price of the TI part(s) at issue in this document sold by TI to Customer on an annual basis.

TAPE AND REEL INFORMATION

REEL DIMENSIONS

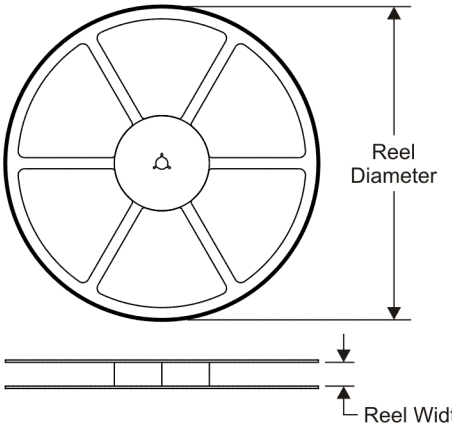

TAPE DIMENSIONS

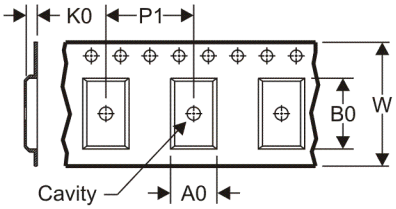

A0	Dimension designed to accommodate the component width
B0	Dimension designed to accommodate the component length
K0	Dimension designed to accommodate the component thickness
W	Overall width of the carrier tape
P1	Pitch between successive cavity centers

QUADRANT ASSIGNMENTS FOR PIN 1 ORIENTATION IN TAPE

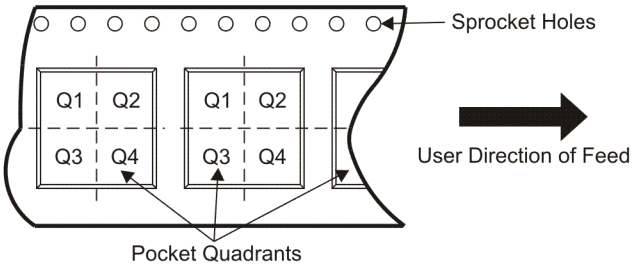

*All dimensions are nominal

Device	Package Type	Package Drawing	Pins	SPQ	Reel Diameter (mm)	Reel Width W1 (mm)	A0 (mm)	B0 (mm)	K0 (mm)	P1 (mm)	W (mm)	Pin1 Quadrant
CD74HC40105M96	SOIC	D	16	2500	330.0	16.4	6.5	10.3	2.1	8.0	16.0	Q1
CD74HCT40105M96	SOIC	D	16	2500	330.0	16.4	6.5	10.3	2.1	8.0	16.0	Q1

TAPE AND REEL BOX DIMENSIONS

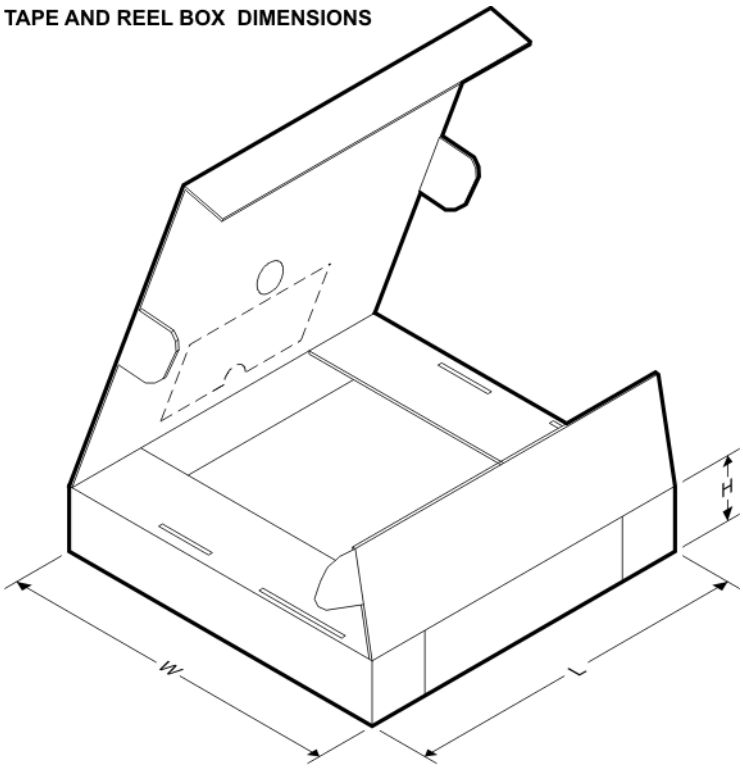

*All dimensions are nominal

Device	Package Type	Package Drawing	Pins	SPQ	Length (mm)	Width (mm)	Height (mm)
CD74HC40105M96	SOIC	D	16	2500	333.2	345.9	28.6
CD74HCT40105M96	SOIC	D	16	2500	333.2	345.9	28.6

J (R–GDIP–T**) CERAMIC DUAL IN–LINE PACKAGE

14 LEADS SHOWN

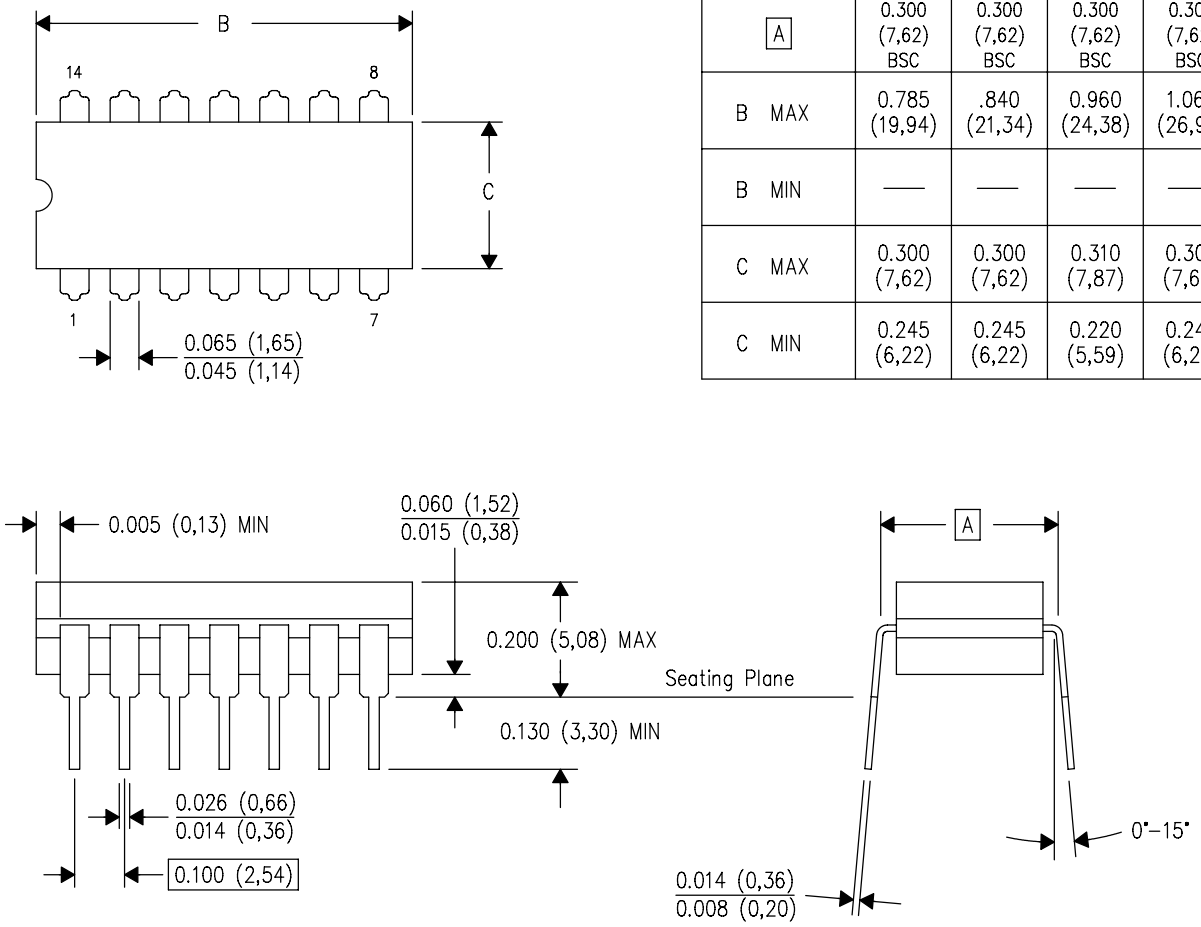

DIM \ PINS **	14	16	18	20
A	0.300 (7,62) BSC	0.300 (7,62) BSC	0.300 (7,62) BSC	0.300 (7,62) BSC
B MAX	0.785 (19,94)	.840 (21,34)	0.960 (24,38)	1.060 (26,92)
B MIN	—	—	—	—
C MAX	0.300 (7,62)	0.300 (7,62)	0.310 (7,87)	0.300 (7,62)
C MIN	0.245 (6,22)	0.245 (6,22)	0.220 (5,59)	0.245 (6,22)

4040083/F 03/03

NOTES:
- A. All linear dimensions are in inches (millimeters).
- B. This drawing is subject to change without notice.
- C. This package is hermetically sealed with a ceramic lid using glass frit.
- D. Index point is provided on cap for terminal identification only on press ceramic glass frit seal only.
- E. Falls within MIL STD 1835 GDIP1–T14, GDIP1–T16, GDIP1–T18 and GDIP1–T20.

N (R–PDIP–T**) PLASTIC DUAL–IN–LINE PACKAGE

16 PINS SHOWN

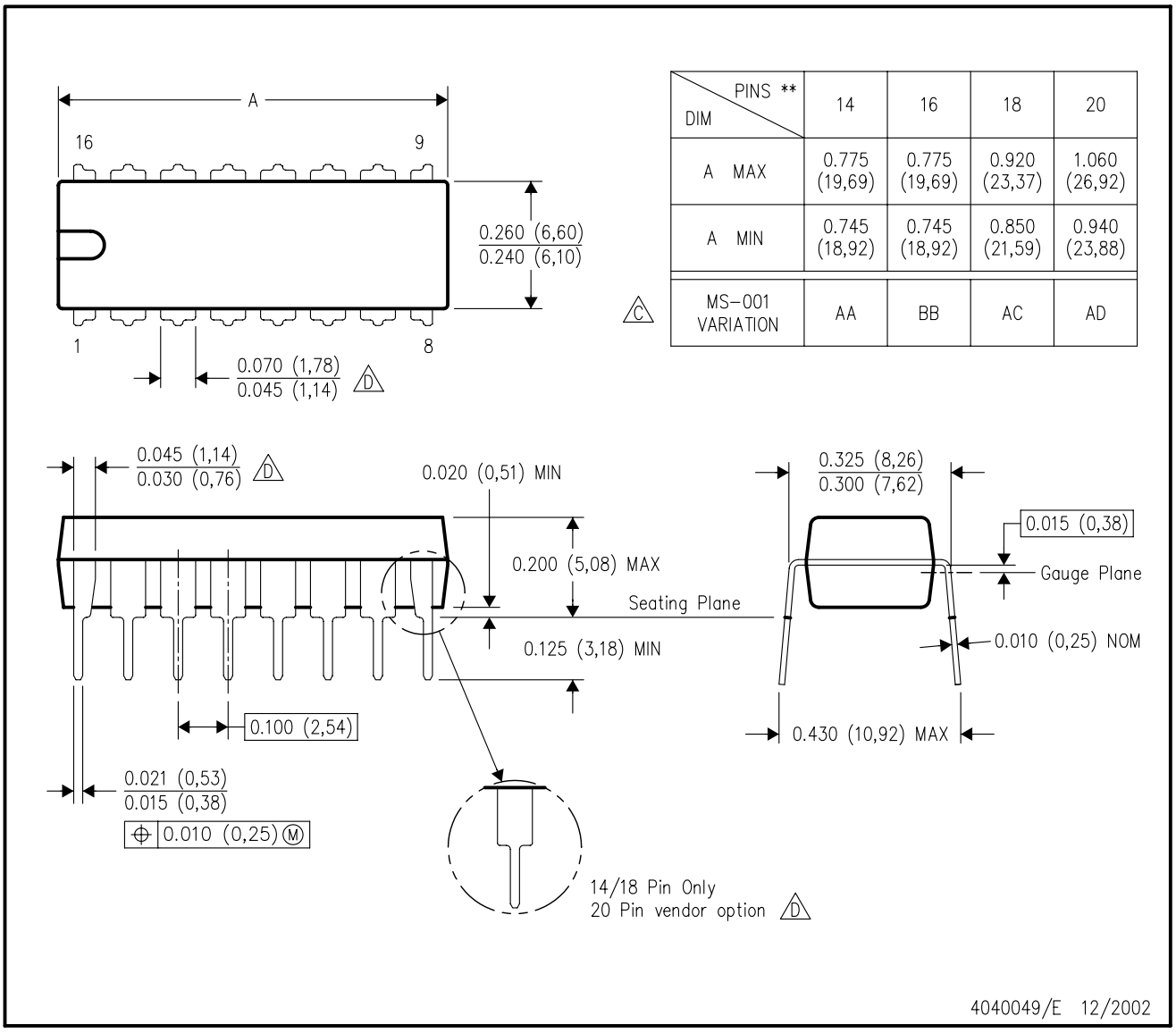

DIM \ PINS **	14	16	18	20
A MAX	0.775 (19,69)	0.775 (19,69)	0.920 (23,37)	1.060 (26,92)
A MIN	0.745 (18,92)	0.745 (18,92)	0.850 (21,59)	0.940 (23,88)
MS–001 VARIATION (C)	AA	BB	AC	AD

NOTES:
A. All linear dimensions are in inches (millimeters).
B. This drawing is subject to change without notice.
C. Falls within JEDEC MS–001, except 18 and 20 pin minimum body length (Dim A).
D. The 20 pin end lead shoulder width is a vendor option, either half or full width.

D (R–PDSO–G16) PLASTIC SMALL OUTLINE

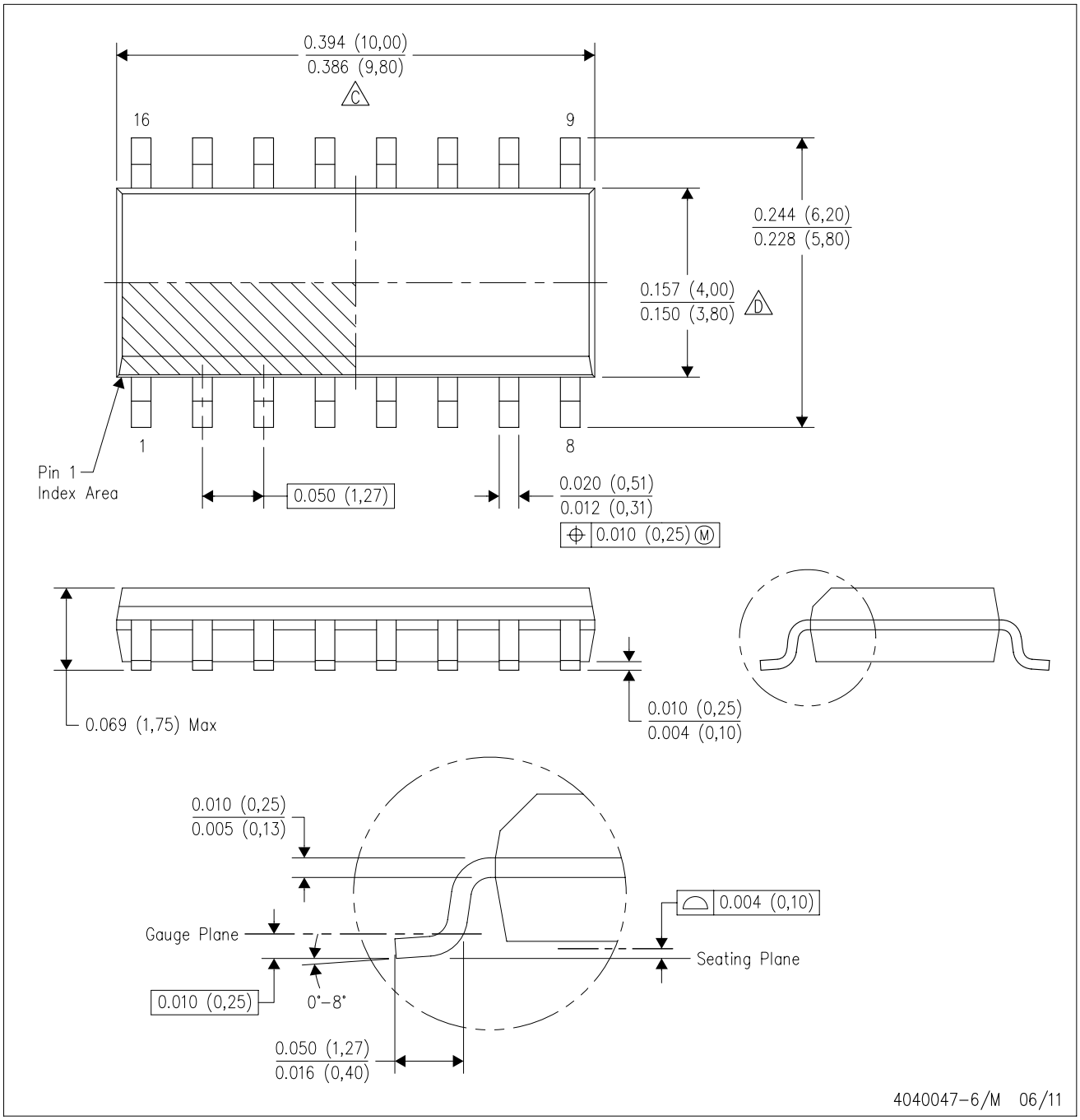

NOTES:
A. All linear dimensions are in inches (millimeters).
B. This drawing is subject to change without notice.
C. Body length does not include mold flash, protrusions, or gate burrs. Mold flash, protrusions, or gate burrs shall not exceed 0.006 (0,15) each side.
D. Body width does not include interlead flash. Interlead flash shall not exceed 0.017 (0,43) each side.
E. Reference JEDEC MS–012 variation AC.

D (R–PDSO–G16) PLASTIC SMALL OUTLINE

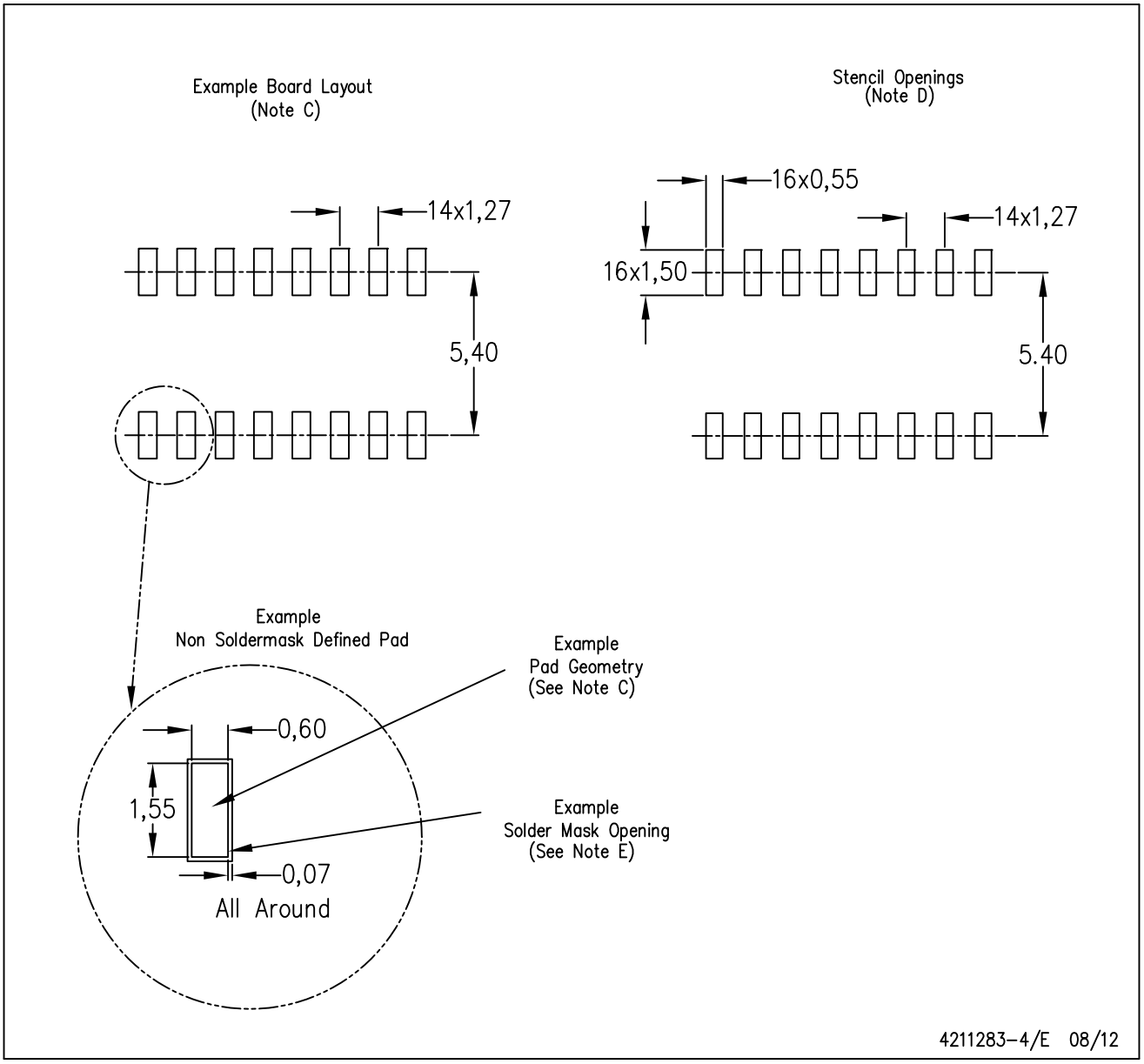

NOTES:
A. All linear dimensions are in millimeters.
B. This drawing is subject to change without notice.
C. Publication IPC–7351 is recommended for alternate designs.
D. Laser cutting apertures with trapezoidal walls and also rounding corners will offer better paste release. Customers should contact their board assembly site for stencil design recommendations. Refer to IPC–7525 for other stencil recommendations.
E. Customers should contact their board fabrication site for solder mask tolerances between and around signal pads.

IMPORTANT NOTICE

Texas Instruments Incorporated and its subsidiaries (TI) reserve the right to make corrections, enhancements, improvements and other changes to its semiconductor products and services per JESD46C and to discontinue any product or service per JESD48B. Buyers should obtain the latest relevant information before placing orders and should verify that such information is current and complete. All semiconductor products (also referred to herein as “components”) are sold subject to TI’s terms and conditions of sale supplied at the time of order acknowledgment.

TI warrants performance of its components to the specifications applicable at the time of sale, in accordance with the warranty in TI’s terms and conditions of sale of semiconductor products. Testing and other quality control techniques are used to the extent TI deems necessary to support this warranty. Except where mandated by applicable law, testing of all parameters of each component is not necessarily performed.

TI assumes no liability for applications assistance or the design of Buyers’ products. Buyers are responsible for their products and applications using TI components. To minimize the risks associated with Buyers’ products and applications, Buyers should provide adequate design and operating safeguards.

TI does not warrant or represent that any license, either express or implied, is granted under any patent right, copyright, mask work right, or other intellectual property right relating to any combination, machine, or process in which TI components or services are used. Information published by TI regarding third-party products or services does not constitute a license to use such products or services or a warranty or endorsement thereof. Use of such information may require a license from a third party under the patents or other intellectual property of the third party, or a license from TI under the patents or other intellectual property of TI.

Reproduction of significant portions of TI information in TI data books or data sheets is permissible only if reproduction is without alteration and is accompanied by all associated warranties, conditions, limitations, and notices. TI is not responsible or liable for such altered documentation. Information of third parties may be subject to additional restrictions.

Resale of TI components or services with statements different from or beyond the parameters stated by TI for that component or service voids all express and any implied warranties for the associated TI component or service and is an unfair and deceptive business practice. TI is not responsible or liable for any such statements.

Buyer acknowledges and agrees that it is solely responsible for compliance with all legal, regulatory and safety-related requirements concerning its products, and any use of TI components in its applications, notwithstanding any applications-related information or support that may be provided by TI. Buyer represents and agrees that it has all the necessary expertise to create and implement safeguards which anticipate dangerous consequences of failures, monitor failures and their consequences, lessen the likelihood of failures that might cause harm and take appropriate remedial actions. Buyer will fully indemnify TI and its representatives against any damages arising out of the use of any TI components in safety-critical applications.

In some cases, TI components may be promoted specifically to facilitate safety-related applications. With such components, TI’s goal is to help enable customers to design and create their own end-product solutions that meet applicable functional safety standards and requirements. Nonetheless, such components are subject to these terms.

No TI components are authorized for use in FDA Class III (or similar life-critical medical equipment) unless authorized officers of the parties have executed a special agreement specifically governing such use.

Only those TI components which TI has specifically designated as military grade or “enhanced plastic” are designed and intended for use in military/aerospace applications or environments. Buyer acknowledges and agrees that any military or aerospace use of TI components which have ***not*** been so designated is solely at the Buyer's risk, and that Buyer is solely responsible for compliance with all legal and regulatory requirements in connection with such use.

TI has specifically designated certain components which meet ISO/TS16949 requirements, mainly for automotive use. Components which have not been so designated are neither designed nor intended for automotive use; and TI will not be responsible for any failure of such components to meet such requirements.

Products		**Applications**	
Audio	www.ti.com/audio	Automotive and Transportation	www.ti.com/automotive
Amplifiers	amplifier.ti.com	Communications and Telecom	www.ti.com/communications
Data Converters	dataconverter.ti.com	Computers and Peripherals	www.ti.com/computers
DLP® Products	www.dlp.com	Consumer Electronics	www.ti.com/consumer-apps
DSP	dsp.ti.com	Energy and Lighting	www.ti.com/energy
Clocks and Timers	www.ti.com/clocks	Industrial	www.ti.com/industrial
Interface	interface.ti.com	Medical	www.ti.com/medical
Logic	logic.ti.com	Security	www.ti.com/security
Power Mgmt	power.ti.com	Space, Avionics and Defense	www.ti.com/space-avionics-defense
Microcontrollers	microcontroller.ti.com	Video and Imaging	www.ti.com/video
RFID	www.ti-rfid.com		
OMAP Mobile Processors	www.ti.com/omap	**TI E2E Community**	e2e.ti.com
Wireless Connectivity	www.ti.com/wirelessconnectivity		

Mailing Address: Texas Instruments, Post Office Box 655303, Dallas, Texas 75265
Copyright © 2012, Texas Instruments Incorporated

О компании

ООО "ТрейдЭлектроникс" - это оперативные поставки широкого спектра электронных компонентов отечественного и импортного производства напрямую от производителей и с крупнейших мировых складов. Реализуемая нашей компанией продукция насчитывает более полумиллиона наименований.

Благодаря этому наша компания предлагает к поставке практически не ограниченный ассортимент компонентов как оптовыми, мелкооптовыми партиями, так и в розницу.

Наличие собственной эффективной системы логистики обеспечивает надежную поставку продукции по конкурентным ценам в точно указанные сроки.

Срок поставки со стоков в **Европе и Америке – от 3 до 14 дней.**

Срок поставки из **Азии – от 10 дней.**

Благодаря развитой сети поставщиков, помогаем в поиске и приобретении экзотичных или снятых с производства компонентов.

Предоставляем спец цены на элементы для создания инженерных сэмплов.

Упорный труд, качественный результат дают нам право быть уверенными в себе и надежными для наших клиентов.

Наша компания это:

- Гарантия качества поставляемой продукции
- Широкий ассортимент
- Минимальные сроки поставок
- Техническая поддержка
- Подбор комплектации
- Индивидуальный подход
- Гибкое ценообразование

Наша организация особенно сильна в поставках модулей, микросхем, пассивных компонентов, ксайленсах (XC), EPF, EPM и силовой электроники.

Большой выбор предлагаемой продукции, различные виды оплаты и доставки, позволят Вам сэкономить время и получить максимум выгоды от сотрудничества с нами!

Trade Electronics.ru

гарантия бесперебойности производства и качества выпускаемой продукции

Перечень производителей, продукцию которых мы поставляем на российский рынок

AMD
ANALOG DEVICES
BOURNS
Coilcraft
élantec Semiconductor, Inc.
HARRIS
Infineon
JRC
MICREL
MOTOROLA
nichicon
PHILIPS
ROHM
SGS-THOMSON
Sipex
TAIYO YUDEN
TOKO
ZILOG
Winbond
Allegro
ATMEL
BURR - BROWN
EXAR
HITACHI
intel
Lattice
muRata
OKI
QUALCOMM
SAMSUNG
SHARP
SONY
TDK
TOSHIBA
KYOCERA
ALTERA
AVX
CITILYST
CYPRESS
FAIRCHILD SEMICONDUCTOR
HOLTEK
International IOR Rectifier
LINEAR TECHNOLOGY
MITSUBISHI
National Semiconductor
ON Semiconductor
REALTEK
SANYO
SHINDENGEN
SGS
TECCOR
TUNDRA
XILINX
Amphenol
Bay Linear
CIRRUS LOGIC
DALLAS
FUJITSU
IDT
intersil
MAXIM
molex
NEC
Panasonic
RENESAS
SII
SIEMENS
ST
Texas Instruments
VISHAY
ZETEX SEMICONDUCTORS

Trade Electronics.ru

гарантия бесперебойности производства и качества выпускаемой продукции

С удовольствием будем прорабатывать для Вас поставки всех необходимых компонентов по текущим запросам для скорейшего выявления групп элементов, по которым сотрудничество именно с нашей компанией будет для Вас максимально выгодным!

С уважением,

Менеджер отдела продаж ООО

«Трейд Электроникс»

Шишлаков Евгений

8 (495)668-30-28 доб 169

manager28@tradeelectronics.ru

http://www.tradeelectronics.ru/