Type ESRD Solid Polymer Aluminum SMT Capacitors

Filtering power of 3 or more tantalum chips and 50 year life

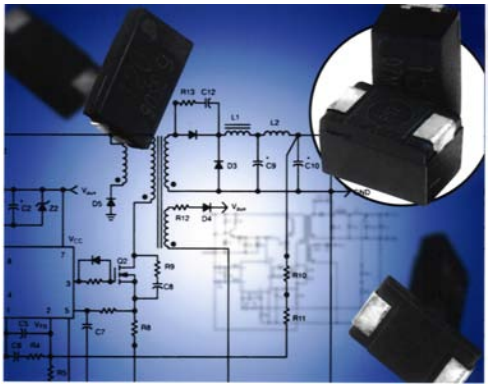

Solid Polymer Aluminum capacitors combine the high capacitance capability of an electrolytic component with the high frequency performance of film capacitors. When the need for low impedance at high frequency is critical for your design, one ESRD chip is capable of replacing several liquid electrolyte aluminum or tantalum capacitors connected in parallel. This is due to the ultra-low ESR which results in significantly lower impedance than either aluminum or tantalum capacitors at frequencies of 100 kHz and above. There is no longer a need to stack capacitors to lower the impedance at high frequency. The low ESR and high capacitance make them ideal for bypassing high frequency noise, and for switching frequency filtering in DC/ DC conversion. ESRD capacitors are packaged in a molded resin case with the same footprint (7.3 x 4.3 mm) as the industry standard tantalum "D" and "E" case sizes. The solid electrolyte results in a capacitor with stable impedance and equivalent series resistance over the entire operating temperature range and they have more than twice the ripple current handling capability of tantalum capacitors. In addition, the solid electrolyte delivers a typical expected operating life of more than 50 years, and it is ignition free.

Applications

Motherboard By-Pass
Switching Supply Input/Output Filters
Power Supply Decoupling
High Frequency Noise Reduction
Laptop LCD Displays
Automotive Digital Equipment
Portable Electronic Equipment

Markings

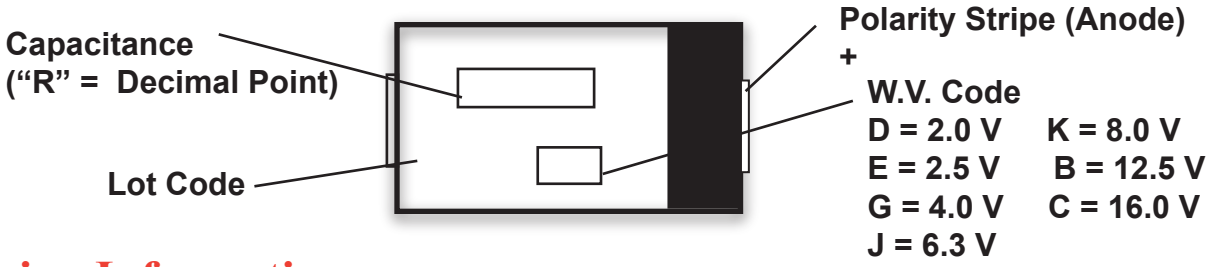

Ordering Information

ESRD **4R7** **M** **16** **R**

CDE Type

Capacitance Code
4R7 = 4.7 µF
220 = 22 µF
101 = 100 µF

Capacitance Tolerance
M = ± 20%

WVDC Code
02 = 2.0 Vdc **08** = 8.0 Vdc
0E = 2.5 Vdc **12** = 12.5 Vdc
04 = 4.0 Vdc **16** = 16.0 Vdc
06 = 6.3 Vdc

Packaging Code
R = Tape & Reel
ESRD (1.8 mm Ht.): 3500 pcs/reel
ESRD (2.8 mm Ht.): 2000 pcs/reel

Type ESRD Solid Polymer Aluminum SMT Capacitors

High Voltage

Outline Drawing

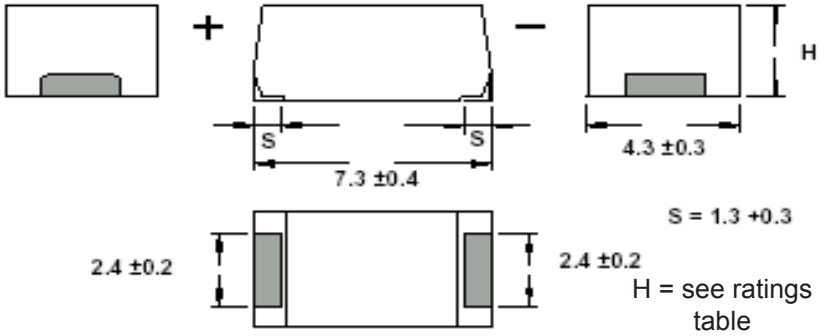

Dimensions in mm

Ratings

Capacitance (µF)	Catalog Part Number (Tape & Reel)	Maximum E.S.R 100 kHz/20 °C (Ω)	Maximum1 Ripple Current 100 kHz/105 °C (Amps)	Case Height H (mm)
		2.0 Vdc		
100	ESRD101M02R	0.018	2.5	1.8 ±0.1
120	ESRD121M02XR	0.015	2.7	1.8 ±0.1
180	ESRD181M02R	0.015	3.0	2.8 ±0.2
220	ESRD221M02R	0.015	3.0	2.8 ±0.2
270	ESRD271M02XR	0.012	3.3	2.8 ±0.2
		2.5 Vdc		
82	ESRD820M0ER	0.018	2.5	1.8 ±0.1
100	ESRD101M0EXR	0.015	2.7	1.8 ±0.1
150	ESRD151M0ER	0.015	3.0	2.8 ±0.2
180	ESRD181M0ER	0.015	3.0	2.8 ±0.2
220	ESRD221M0EXR	0.012	3.3	2.8 ±0.2
		4.0 Vdc		
56	ESRD560M04R	0.018	2.5	1.8 ±0.1
82	ESRD820M04XR	0.015	2.7	1.8 ±0.1
120	ESRD121M04R	0.015	3.0	2.8 ±0.2
150	ESRD151M04XR	0.012	3.3	2.8 ±0.2
		6.3 Vdc		
10	ESRD100M06R	0.055	1.4	1.8 ±0.1
22	ESRD220M06R	0.040	1.6	1.8 ±0.1
33	ESRD330M06R	0.028	2.0	1.8 ±0.1
47	ESRD470M06R	0.018	2.5	1.8 ±0.1
68	ESRD680M06XR	0.015	2.7	1.8 ±0.1
100	ESRD101M06R	0.015	3.0	2.8 ±0.2
120	ESRD121M06XR	0.012	3.3	2.8 ±0.2
		8.0 Vdc		
8.2	ESRD8R2M08R	0.055	1.4	1.8 ±0.1
15	ESRD150M08R	0.040	1.6	1.8 ±0.1
22	ESRD220M08R	0.028	2.0	1.8 ±0.1
33	ESRD330M08R	0.018	2.5	1.8 ±0.1
68	ESRD680M08R	0.015	3.0	2.8 ±0.2
		12.5 Vdc		
4.7	ESRD4R7M12R	0.080	1.0	1.8 ±0.1
10	ESRD100M12R	0.060	1.0	1.8 ±0.1
15	ESRD150M12R	0.050	1.3	1.8 ±0.1
22	ESRD220M12R	0.030	1.6	1.8 ±0.1
		16.0 Vdc		
2.2	ESRD2R2M16R	0.110	1.0	1.8 ±0.1
4.7	ESRD4R7M16R	0.080	1.0	1.8 ±0.1
6.8	ESRD6R8M16R	0.070	1.0	1.8 ±0.1
8.2	ESRD8R2M16R	0.045	1.3	1.8 ±0.1

Specifications

Operating Temperature Range:
–55 °C to +105 °C, at 100% rated voltage

Surge Voltage:
125% of the rated working Vdc

Capacitance Range:
2.2 µF to 270 µF

Capacitance Tolerance:
±20% at 120 Hz and +20 °C

DC Leakage Current (DCL):
After a two minute application of the rated working voltage at +20 °C:

2V — 4V: I ≤0.06CV
6.3V — 16V: I ≤0.04CV or 3 µA
(whichever greater)

Dissipation Factor (DF):
The ratio of the capacitorís equivalent series resistance to its reactance at 120Hz and +20 ºC
ESRD (1.8 mm ht.): DF is 0.06 Max.
ESRD (2.8 mm ht.): DF is 0.10 Max.

Resistance to Soldering Heat:
Heat the capacitors at 235 ºC in an oven for 200 seconds. The capacitors will meet the following limits after stabilizing at 20 ºC:

ΔC = ±10% of the initial measured value
DF ≤ the initial specified value
DCL ≤ the initial specified value

Vibration:
No abnormal change shall occur to capacitors that have been soldered (and attached) to a board when subjected to a vibration of 1.5 mm amplitude that is varied from 10 Hz to 2000 Hz in 20 min. cycles. The test duration is 2 hours for each right angle direction (total 6 hours). Capacitance is monitored during the last cycle of the test for stablilty.

Moisture Resistance:
After 500 hours storage at +60 ºC and 90% to 95% RH without load, the capacitor will meet the following limits:

ΔC = +70%/–20% of the initial measured value (2.0 Vdc, 2.5 Vdc),
+60%/–20% of the initial measured value (4.0 Vdc),
+50%/–20% of the initial measured value (6.3 Vdc),
+40%/–20% of the initial measured value (all other voltages)
DF ≤ two times the initial specified value
DCL ≤ the initial specified value

Life Test:
Apply rated DC working voltage at 105 ºC for 1000 hours, and then stabilize them to +20 ºC. Capacitors will meet the following limits:

ΔC = ±10% of the initial measured value
DF ≤ the initial specified value
DCL ≤ the initial specified value

Shelf Life Test:
Shelf life is typically 5 to 10 years. Accelerated test: after 500 hours at 105 ºC, capacitors will meet the following limits after stabilization at 20 ºC:

ΔC = ±10% of the initial measured value
DF ≤ the initial specified value
DCL ≤ the initial specified value

Shear Test:
No damage shall be visible after subjecting a mounted capacitor to a side force of 5 N for 10 seconds

(For more information on this product please see the Solid Polymer Aluminum Capacitors Application Guide)

О компании

ООО "ТрейдЭлектроникс" - это оперативные поставки широкого спектра электронных компонентов отечественного и импортного производства напрямую от производителей и с крупнейших мировых складов. Реализуемая нашей компанией продукция насчитывает более полумиллиона наименований.

Благодаря этому наша компания предлагает к поставке практически не ограниченный ассортимент компонентов как оптовыми, мелкооптовыми партиями, так и в розницу.

Наличие собственной эффективной системы логистики обеспечивает надежную поставку продукции по конкурентным ценам в точно указанные сроки.

Срок поставки со стоков в **Европе и Америке – от 3 до 14 дней.**

Срок поставки из **Азии – от 10 дней.**

Благодаря развитой сети поставщиков, помогаем в поиске и приобретении экзотичных или снятых с производства компонентов.

Предоставляем спец цены на элементы для создания инженерных сэмплов.

Упорный труд, качественный результат дают нам право быть уверенными в себе и надежными для наших клиентов.

Наша компания это:

- Гарантия качества поставляемой продукции
- Широкий ассортимент
- Минимальные сроки поставок
- Техническая поддержка
- Подбор комплектации
- Индивидуальный подход
- Гибкое ценообразование

Наша организация особенно сильна в поставках модулей, микросхем, пассивных компонентов, ксайленсах (XC), EPF, EPM и силовой электроники.

Большой выбор предлагаемой продукции, различные виды оплаты и доставки, позволят Вам сэкономить время и получить максимум выгоды от сотрудничества с нами!

Trade Electronics.ru

гарантия бесперебойности производства и качества выпускаемой продукции

Перечень производителей, продукцию которых мы поставляем на российский рынок

AMD
ANALOG DEVICES
BOURNS
Coilcraft
élantec Semiconductor, Inc.
HARRIS
Infineon
JRC
MICREL
MOTOROLA
nichicon
PHILIPS
ROHM
SGS-THOMSON
Sipex
TAIYO YUDEN
TOKO
ZILOG
Winbond
Allegro
ATMEL
BURR - BROWN
EXAR
HITACHI
intel
Lattice
muRata
OKI
QUALCOMM
SAMSUNG
SHARP
SONY
TDK
TOSHIBA
KYOCERA
ALTERA
AVX
CITILYST
CYPRESS
FAIRCHILD SEMICONDUCTOR
HOLTEK
International IOR Rectifier
LINEAR TECHNOLOGY
MITSUBISHI
National Semiconductor
ON Semiconductor
REALTEK
SANYO
SHINDENGEN
SGS
TECCOR
TUNDRA
XILINX
Amphenol
Bay Linear
CIRRUS LOGIC
DALLAS
FUJITSU
IDT
intersil
MAXIM
molex
NEC
Panasonic
RENESAS
SII
SIEMENS
ST
Texas Instruments
VISHAY
ZETEX SEMICONDUCTORS

Trade Electronics.ru

гарантия бесперебойности производства и качества выпускаемой продукции

С удовольствием будем прорабатывать для Вас поставки всех необходимых компонентов по текущим запросам для скорейшего выявления групп элементов, по которым сотрудничество именно с нашей компанией будет для Вас максимально выгодным!

С уважением,

Менеджер отдела продаж ООО

«Трейд Электроникс»

Шишлаков Евгений

8 (495)668-30-28 доб 169

manager28@tradeelectronics.ru

http://www.tradeelectronics.ru/