FAIRCHILD SEMICONDUCTOR®

March 2006

FS6X0420RJ/ FS6X0720RJ/ FS6X1220RJ Fairchild Power Switch (FPS™)

Features

- Current Mode PWM Control with a Fixed Operating Frequency (300kHz)
- Pulse by Pulse Current Limit
- Over Load Protection
- Over Voltage Protection
- Thermal Shutdown
- Line Under Voltage Detection and Sleep on/off Function
- Internal High Voltage SenseFET (200V)
- Supports Forward or Flyback Topology

Applications

- DC-DC Converter
- PoE Device

Related Application Notes

- **AN4137** - Design Guidelines for Off-line Flyback Converters Using Fairchild Power Switch (FPS)
- **AN4140** - Transformer Design Consideration for Off-line Flyback Converters using Fairchild Power Switch
- **AN4141** - Troubleshooting and Design Tips for Fairchild Power Switch Flyback Applications
- **AN4148** - Audible Noise Reduction Techniques for FPS Applications

Description

The FS6X-Series is specially designed for off-line DC-DC converters with minimal external components. This device combines a current mode PWM controller with a high voltage power SenseFET in a single package. The PWM controller includes integrated fixed frequency oscillator, line under voltage lockout, sleep on/off function, thermal shutdown protection, over voltage protection, pulse-by-pulse current limit, and temperature compensated precise current sources for a loop compensation. Compared with the discrete MOSFET and PWM controller solution, the FS6X-Series can reduce total cost, component count, size, and weight, while simultaneously increasing efficiency, productivity, and system reliability.

OUTPUT POWER TABLE(1)	
PRODUCT	$36V_{DC}$~$72V_{DC}$
FS6X0420RJ	14W
FS6X0720RJ	26W
FS6X1220RJ	36W

Table 1. Maximum Output Power

Note:

1. Maximum practical continuous power in an open frame design at 50°C ambient.

Ordering Information

Part Number	Operating Temp. Range	Pb-Free	Package	Packing Method	Marking Code
FS6X0420RJ	-25°C to +85°C	Yes	D2-Pak-6L	Tube	6X0420R
FS6X0720RJ	-25°C to +85°C	Yes	D2-Pak-6L	Tube	6X0720R
FS6X1220RJ	-25°C to +85°C	Yes	D2-Pak-6L	Tube	6X1220R
FS6X0420RJX	-25°C to +85°C	Yes	D2-Pak-6L	Tape & Reel	6X0420R
FS6X0720RJX	-25°C to +85°C	Yes	D2-Pak-6L	Tape & Reel	6X0720R
FS6X1220RJX(2)	-25°C to +85°C	Yes	D2-Pak-6L	Tape & Reel	6X1220R

Note:

2. X : Tape & Reel

FPS™ is a trademark of Fairchild Semiconductor Corporation

Typical Application Diagram

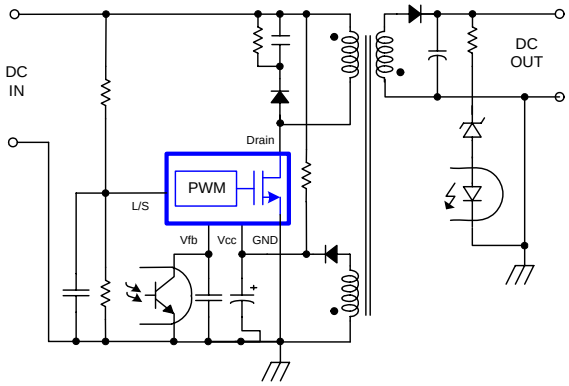

Figure 1. Typical Flyback Application

Internal Block Diagram

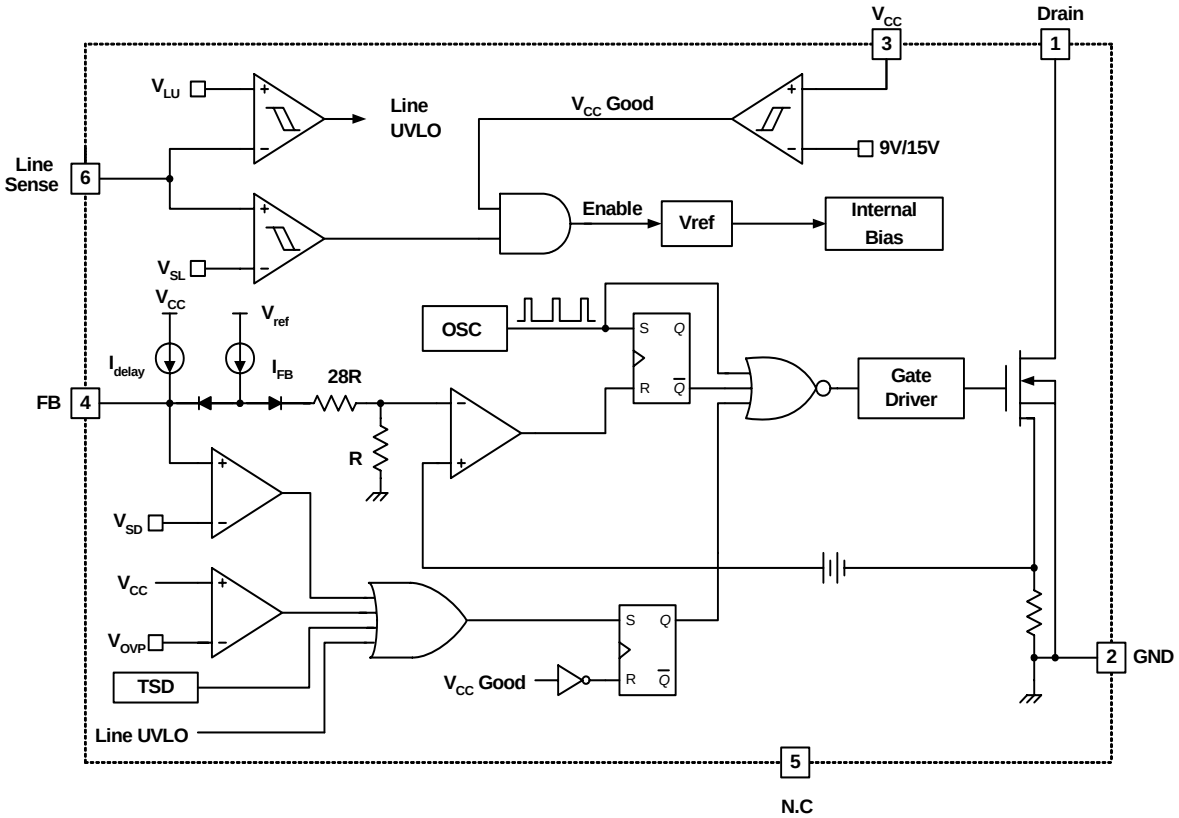

Figure 2. Functional Block Diagram of FS6X-Series

Pin Assignments

D2-PAK-6L

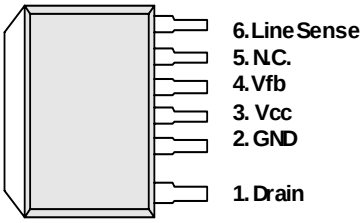

Figure 3. Pin Configuration (Top View)

Pin Definitions

Pin Number	Pin Name	Pin Function Description
1	Drain	This pin is the high voltage power SenseFET drain connection.
2	GND	This pin is the control ground and the SenseFET source.
3	Vcc	This pin is the positive supply input. This pin provides internal operating current for both start-up and steady-state operation.
4	Feedback (FB)	This pin is internally connected to the inverting input of the PWM comparator. The collector of an opto-coupler is typically tied to this pin. For stable operation, a capacitor should be placed between this pin and GND. If the voltage of this pin reaches 7.5V, the over load protection is activated resulting in shutdown of the IC.
5	N.C.	This pin is not connected.
6	Line Sense (LS)	According to the voltage of this pin, three operation modes are defined: normal operation mode, line under voltage lock out mode, and sleep mode. If the voltage of this pin is smaller than 2.55V, the IC goes into the line under voltage lock out, stopping switching operation. If the voltage of this pin is smaller than 1.8V, the IC enters into sleep mode. During sleep mode, reference voltage generation circuit including the shunt regulator is disabled and only 300uA operation current is required.

Absolute Maximum Ratings

(Ta=25°C, unless otherwise specified.)

Parameter	Symbol		Value	Unit
Drain-source Voltage	V_{DSS}		200	V
Pulsed Drain Current (Tc=25°C)(1)	I_{DM}	FS6X0420RJ	10.2	A
		FS6X0720RJ	16.2	
		FS6X1220RJ	23.7	
Continuous Drain Current (Tc=25°C)	I_D	FS6X0420RJ	3.4	A (rms)
		FS6X0720RJ	5.4	
		FS6X1220RJ	12.4	
Continuous Drain Current (Tc=100°C)	I_D	FS6X0420RJ	2.1	A (rms)
		FS6X0720RJ	3.4	
		FS6X1220RJ	7.9	
Supply Voltage	V_{CC}		35	V
Input Voltage Range	V_{FB}		-0.3 to V_{CC}	V
Total Power Dissipation (Tc=25°C)	P_D	FS6X0420RJ	43	W
		FS6X0720RJ	54	
		FS6X1220RJ	125	
Operating Junction Temperature	T_j		Internally limited	°C
Operating Ambient Temperature	T_A		-25 to +85	°C
Storage Temperature Range	T_{STG}		-55 to +150	°C

Note:

1. Repetitive rating: Pulse width limited by maximum junction temperature.

Thermal Impedance

Parameter	Symbol		Value	Unit
Junction-to-Ambient Thermal	θ_{JA}		-	°C/W
Junction-to-Case Thermal(1)	θ_{JC}	FS6X0420RJ	2.9	°C/W
		FS6X0720RJ	2.3	
		FS6X1220RJ	1.0	

Note:

1. Infinite cooling condition - Refer to the SEMI G30-88.

Electrical Characteristics

(Ta=25°C, unless otherwise specified.)

Parameter	Symbol		Condition	Min.	Typ.	Max.	Unit
SENSE FET SECTION							
Drain Source Breakdown Voltage	BV_{DSS}		V_{GS} = 0V, I_D = 250μA	200	220	-	V
Zero Gate Voltage Drain Current	I_{DSS}		V_{DS} = 200V, V_{GS} = 0V	-	-	250	μA
			V_{DS} = 160V V_{GS} = 0V, T_C = 125°C	-	-	250	μA
Static Drain Source on Resistance (1)	$R_{DS(ON)}$	FS6X0420RJ	V_{GS} = 10V, I_D = 2.5A	-	1.2	1.5	Ω
		FS6X0720RJ		-	0.64	0.75	
		FS6X1220RJ		-	0.24	0.30	
Output Capacitance	C_{OSS}	FS6X0420RJ	V_{GS} = 0V V_{DS} = 25V, f = 1MHz	-	32	45	pF
		FS6X0720RJ		-	49	65	
		FS6X1220RJ		-	125	160	
CONTROL SECTION							
Initial Frequency	F_{OSC}		-	270	300	330	kHz
Voltage Stability	F_{STABLE}		12V ≤ Vcc ≤ 23V	0	1	3	%
Temperature Stability (2)	ΔF_{OSC}		-25°C ≤ Ta ≤ 85°C	0	±5	±10	%
Maximum Duty Cycle	D_{MAX}		-	72	80	88	%
Minimum Duty Cycle	D_{MIN}		-	-	-	0	%
Start Threshold Voltage	V_{START}		V_{FB} = GND	14	15	16	V
Stop Threshold Voltage	V_{STOP}		V_{FB} = GND	8	9	10	V
Feedback Source Current	I_{FB}		V_{FB} = GND	0.7	0.9	1.1	mA
PROTECTION SECTION							
Peak Current Limit (3)	I_{Limit}	FS6X0420RJ	-	1.2	1.4	1.6	A
		FS6X0720RJ		2.3	2.7	3.1	
		FS6X1220RJ		2.8	3.2	3.6	
Over Voltage Protection	V_{OVP}		V_{CC} > 6.9V	23	25	27	V
Thermal Shutdown Temperature (2)	T_{SD}		-	140	160	-	°C
Shutdown Feedback Voltage	V_{SD}		V_{FB} ≥ 6.9V	6.9	7.5	8.1	V
Shutdown Delay Current	I_{DELAY}		V_{FB} = 5V	4.0	5.0	6.0	μA

Notes:

1. Pulse test: Pulse width ≤ 300μS, duty ≤ 2%.
2. These parameters, although guaranteed at the design, are not tested in mass production.
3. These parameters indicate the inductor current.

Electrical Characteristics

(Ta=25°C, unless otherwise specified.)

Parameter	Symbol	Condition	Min.	Typ.	Max.	Unit
TOTAL DEVICE SECTION						
Startup Current (1)	I_{start}	V_{FB} = GND, V_{CC} = 14V	-	60	120	uA
Sleep Mode Current	I_{SLEEP}	V = 1V, V_{CC} = 16V	-	300	500	uA
Operating Supply Current (1)	I_{OP}	V_{FB} = GND, V_{CC} = 16V	-	10	15	mA
	$I_{OP(MIN)}$	V_{FB} = GND, V_{CC} = 12V				
	$I_{OP(MAX)}$	V_{FB} = GND, V_{CC} = 20V				
Line UVLO Threshold Voltage	V_{LU}	-	2.4	2.55	2.7	V
Sleep On/Off Threshold Voltage	V_{SL}	-	1.5	1.8	2.1	V

Notes:

1. This parameter is the current flowing into the control IC.

Typical Performance Characteristics

(These Characteristic Graphs are Normalized at Ta= 25°C.)

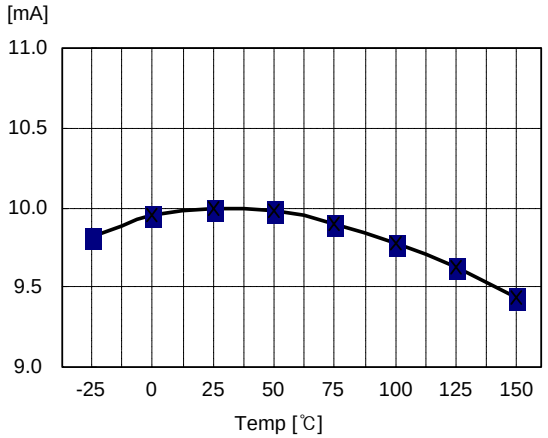

Figure 4. Operating Current vs. Temp

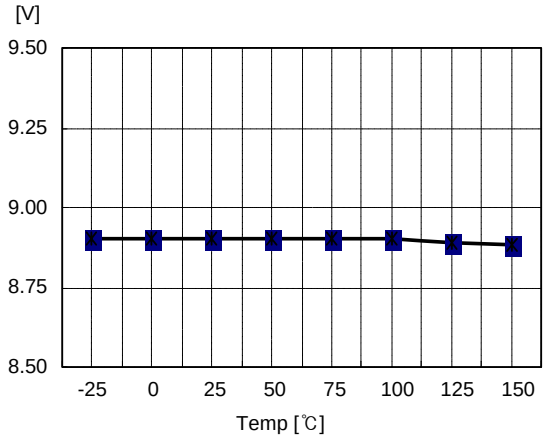

Figure 5. Stop Threshold voltage vs. Temp

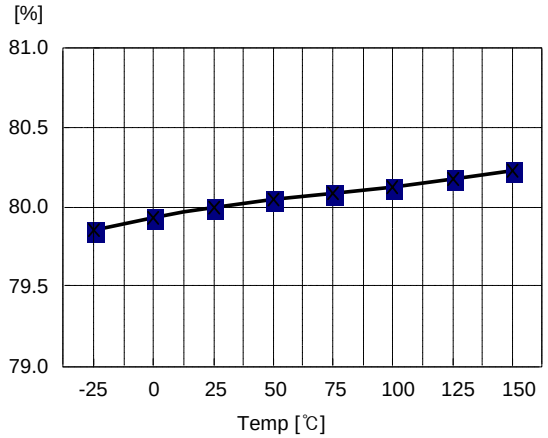

Figure 6. Maximum Duty vs. Temp

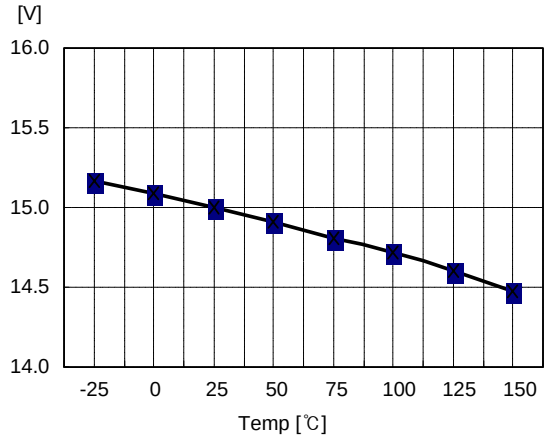

Figure 7. Start Threshold Voltage vs. Temp

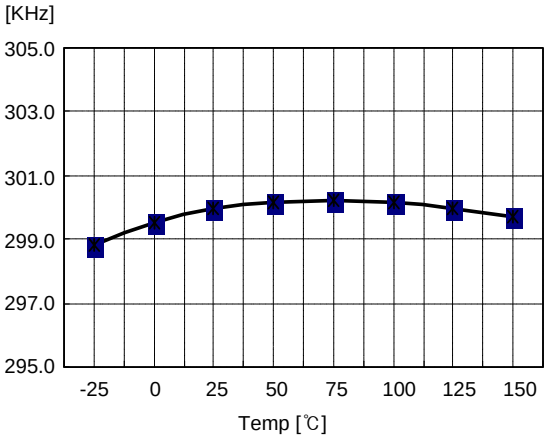

Figure 8. Operating Frequency vs. Temp

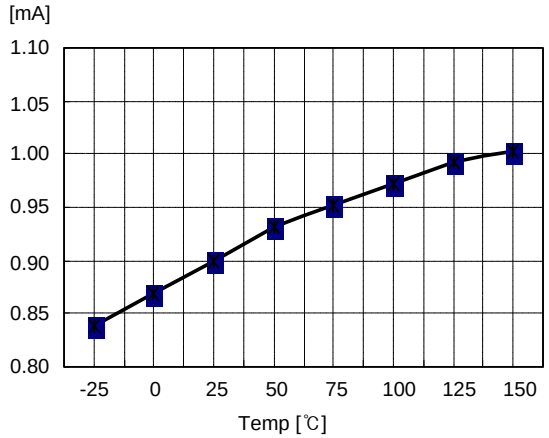

Figure 9. Feedback Source Current vs. Temp

Typical Performance Characteristics (Continued)

(These Characteristic Graphs are Normalized at Ta= 25°C)

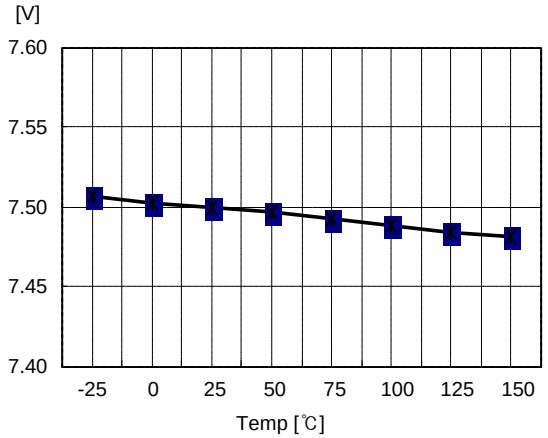

Figure 10. Shutdown FB Voltage vs. Temp

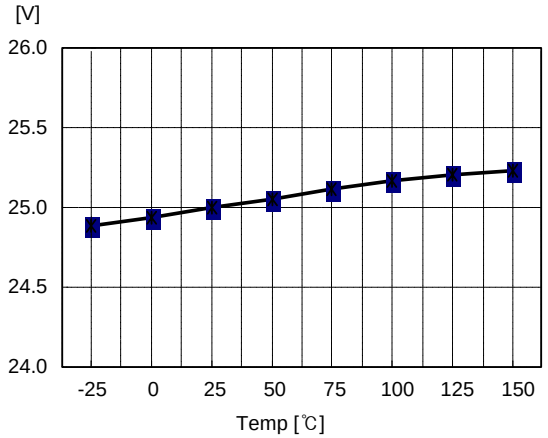

Figure 11. Over Voltage Protection vs. Temp

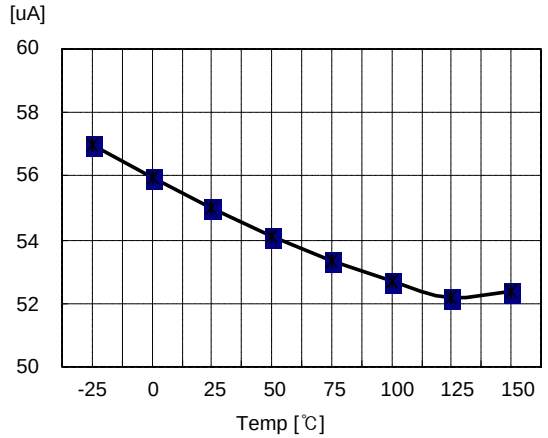

Figure 12. Start Up Current vs. Temp

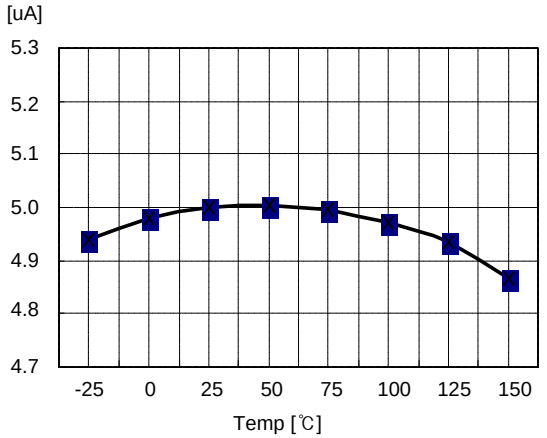

Figure 13. Shutdown Delay Current vs. Temp

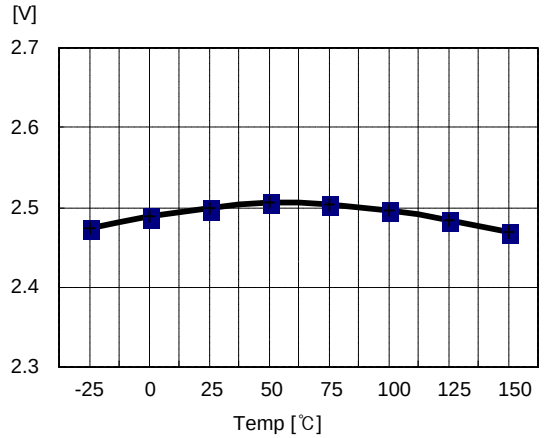

Figure 14. LineUVLO threshold Voltage vs.Temp

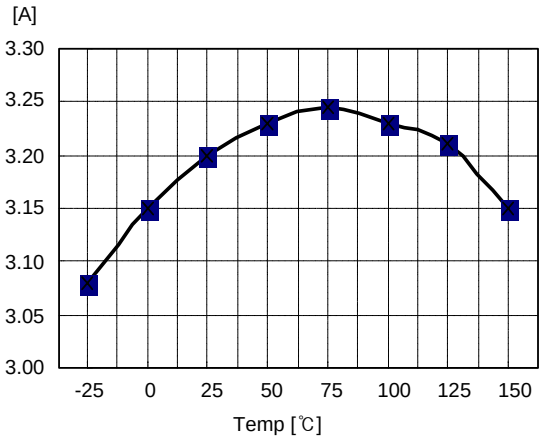

Figure 15. Current Limit vs. Temp

Applications Information

1. Startup

To guarantee stable operation of the control IC, Vcc has under voltage lockout (UVLO) with 6V hysteresis. Figure 16 shows the relation between the supply current (Icc) and the supply voltage (Vcc). Before Vcc reaches 15V, the start-up current is 60μA, which is usually provided by the DC link through start-up resistor. When Vcc reaches 15V, the control IC begins operation and the operating current increases to 10mA as shown. Once the control IC starts operation, it continues its normal operation unless Vcc goes below the stop voltage of 9V.

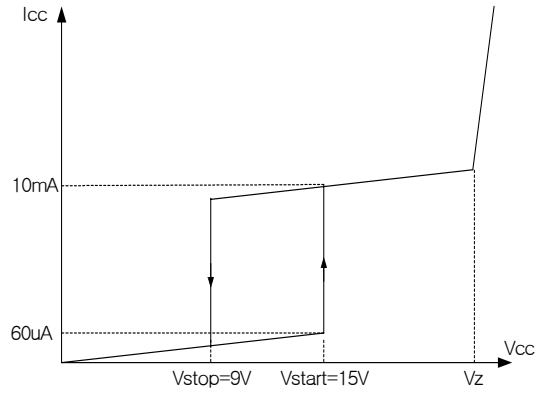

Figure 16. Relation between Supply Current and Voltage

2. Feedback Control

The FS6X-Series employs current mode control. The voltage of the feedback pin is compared with the current sense voltage for pulse width modulation (PWM). Figure 17 illustrates the simplified PWM block. The feedback voltage determines the peak drain current of the SenseFET. Usually, an opto-coupler, along with the TL431(shunt regulator) are used to implement the feedback network. The collector of the opto-coupler transistor is connected to the feedback pin and the emitter is connected to the ground pin. When the voltage of the reference pin of the TL431 exceeds the internal reference voltage of 2.5V, the opto-coupler diode current increases, pulling down the feedback voltage.

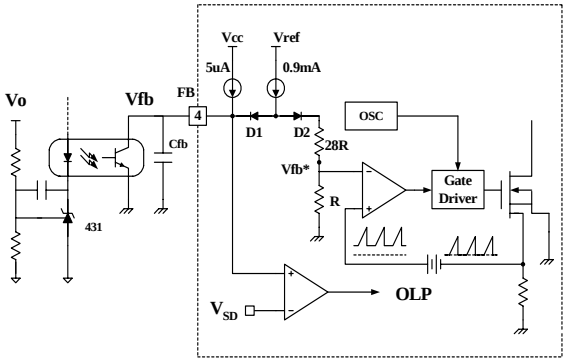

Figure 17. Pulse Width Modulation (PWM) Circuit

3. Protection Circuit

Besides pulse-by-pulse current limit, the FS6X-Series has the following self protection functions: over load protection (OLP), over voltage protection (OVP), and thermal shutdown (TSD). Because these protection circuits are fully integrated into the IC without external components, the reliability is improved. In the event of a fault condition, FS6X-Series enters into auto-restart operation. Once the fault condition occurs, switching operation is terminated, and the MOSFET remains off, which causes Vcc to be reduced. When Vcc reaches 9V, the protection is reset and the supply current reduces to 60uA. Then, Vcc begin to increase with the current provided through the start-up resistor. When Vcc reaches 15V, FS6X-Series resumes its normal operation if the fault condition is removed. In this manner, the auto-restart alternately enables and disables the switching of the power MOSFET until the fault condition is eliminated as illustrated in Figure 18.

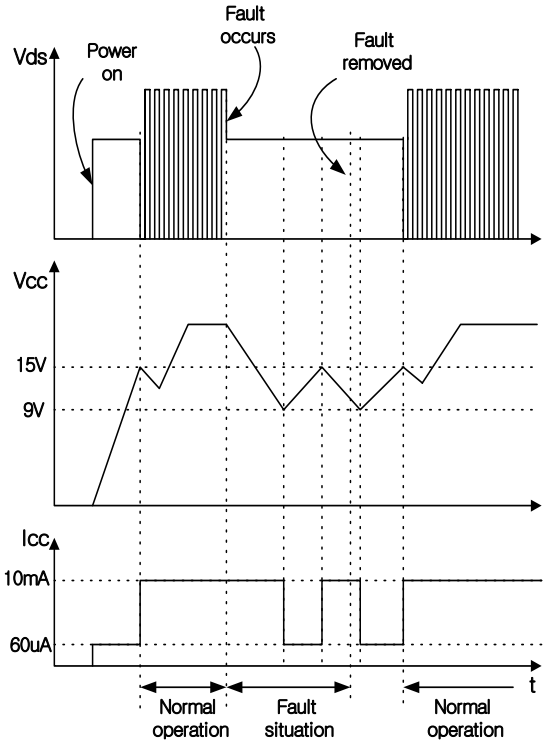

Figure 18. Auto Restart Operation After Protection

3.1 Pulse-by-pulse Current Limit

As shown in Figure 17, the drain current of the power MOSFET is limited by the inverting input of PWM comparator (Vfb*). Assuming that the 0.9mA current source flows only through the internal resistor (28R +R= 2.9k), the cathode voltage of diode D2 is about 2.6V. Since D1 is blocked when the feedback voltage (Vfb) exceeds 2.6V, the maximum voltage of the cathode of D2 is 2.6V. Therefore, the maximum value of Vfb* is about 0.1V, which limits the peak value of the power MOSFET drain current.

3.2 Over Load Protection (OLP)

Overload means that the load current exceeds a pre-set level due to an abnormal situation. In this situation, the protection circuit should be activated to protect the SMPS (Switch Mode Power Supplies). However, even when the SMPS is in normal operation, the over load protection circuit can be activated during the load transition. To avoid this undesired operation, the over load protection circuit is designed to be activated after a specified period to determine whether it is a transient situation or an overload situation. Because of the pulse-by-pulse current limit capability, the maximum peak current through the SMPS is limited, and therefore the maximum input power is restricted with a given input voltage. If the output consumes beyond this maximum power, the output voltage (Vo) decreases below the set voltage. This reduces the current through the opto-coupler diode which also reduces opto-coupler transistor current increasing Vfb. If Vfb exceeds 2.6V, D1 is blocked and the 5mA current source starts to charge Cfb slowly compared to when the 0.9mA current source charges Cfb. In this condition, Vfb continues increasing until it reaches 7.5V, and the switching operation is terminated at that time as shown in Figure 19. The delay time for shutdown is the time required to charge Cfb from 2.6V to 7.5V with 5mA. When Cfb is 10nF (103), T12 is approximately 9.8ms and when Cfb is 0.1mF (104), T12 is approximately 98ms. These values are enough to prevent SMPS from being shut down during transient situations.

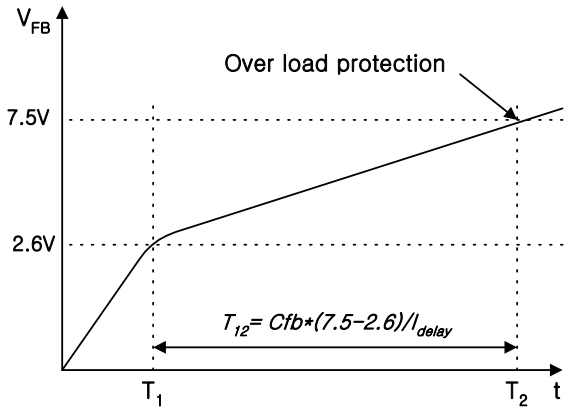

Figure 19. Over Load Protection

3.3 Over Voltage Protection (OVP)

In the case of a malfunction in the secondary side feedback circuit, or feedback loop open caused by a defect of solder, the current through the opto-coupler transistor becomes almost zero. Then, Vfb climbs up in a similar manner to the over load situation, forcing the preset maximum current to be supplied to the secondary side until the over load protection is activated. Because more than required energy is provided to the output, the output voltage may exceed the rated voltage before the over load protection is activated, resulting in the breakdown of the devices in the secondary side. To prevent this situation, an over voltage protection (OVP) circuit is employed. In general, Vcc is proportional to the output voltage and FS6X-Series uses Vcc instead of directly monitoring the output voltage. If VCC exceeds 25V, OVP circuit is activated resulting in termination of switching. To avoid undesired activation of OVP during normal operation, Vcc should be properly designed to be below 25V.

3.4 Thermal Shutdown (TSD)

The thermal shutdown circuitry senses the junction temperature. The threshold is set at 160×C. When the junction temperature rises above this threshold (160×C), the power MOSFET is disabled.

4. Line UVLO and Sleep Mode

According to the voltage of the Line Sense pin, three operation modes are defined: normal operation mode, line under voltage lock out mode, and sleep mode, as shown in Figure 20. When the voltage of this pin is over 2.55V, FS6X-Series operates in normal mode. When the voltage of this pin is less than 2.55V, it goes into line under voltage lock out mode terminating switching operation. When the voltage of this pin is less than 1.8V, it enters into sleep mode. During sleep mode, the reference voltage generation circuit, including the shunt regulator, is disabled and only 300mA operation current is required.

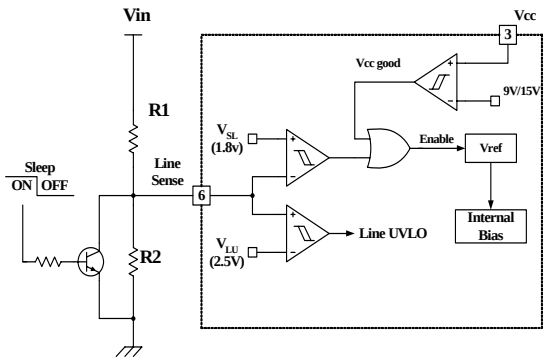

Figure 20. Line Sense Block

Typical Application Circuit

Application	Output power	Input voltage	Output voltage (Max current)
PoE Device	15W	36-72Vdc	5V (3.0A)

Features

- High switching frequency(300kHz)
- High power density
- Low component count
- Enhanced system reliability through various protection functions

Key Design Notes

- Capacitor C104 is employed to reduce the noise on sensed line voltage.
- The delay time for over load protection is designed to be about 12ms with C103 of 22nF. If a faster triggering of OLP is required, C103 can be reduced to 10nF.

1. Schematic

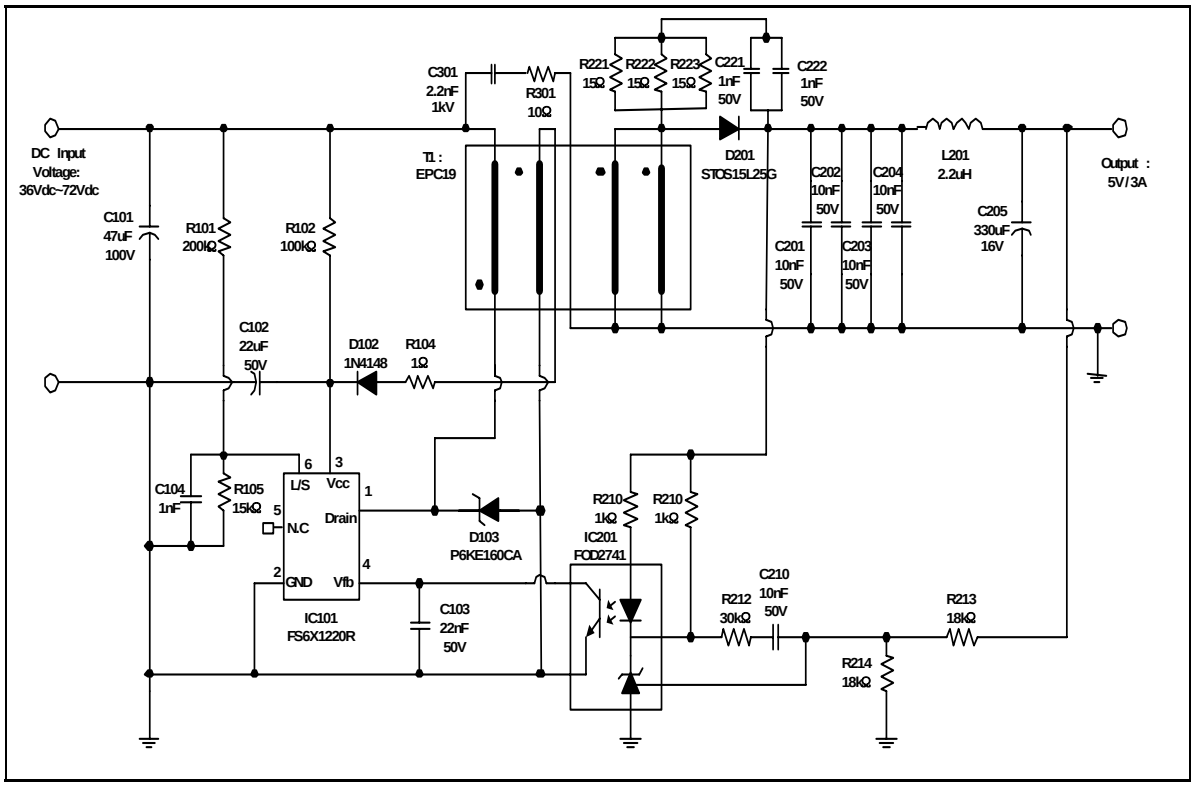

Figure 21. Demo Circuit

2. Transformer

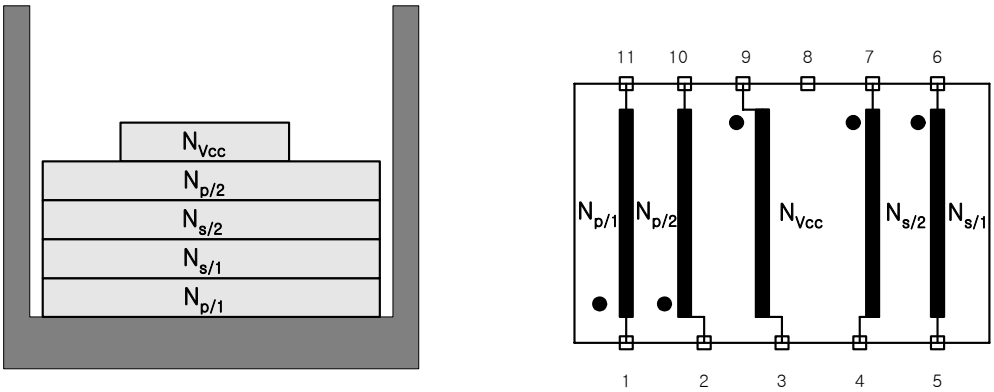

Figure 22. Transformer Schematic Diagram

3. Winding Specifications

No	Pin (s→f)	Wire	Turns	Winding Method
Np/1	1 → 11	$0.35^{\phi} \times 1$	25	Center Winding
Insulation: Polyester Tape t = 0.050mm, 2Layers				
Ns/1	6 → 5	$0.4^{\phi} \times 3$	4	Solenoid Winding
Insulation: Polyester Tape t = 0.050mm, 2Layers				
Np/2	2 → 10	$0.35^{\phi} \times 1$	25	Center Winding
Insulation: Polyester Tape t = 0.050mm, 2Layers				
Nvcc	9 → 3	$0.3^{\phi} \times 1$	12	Center Winding
Insulation: Polyester Tape t = 0.050mm, 2Layers				

4. Electrical Characteristics

Parameter	Pin	Specification	Remarks
Inductance	1,2 - 10,11	61uH ± 10%	100kHz, 1V
Leakage Inductance	1,2 - 10,11	8.8uH Max	2nd all short

5. Core & Bobbin

- Core: EPC19
- Bobbin: EPC19
- Ae(mm2): 22.7

6. Demo Circuit Part List

Part	Value	Note	Part	Value	Note
Resistor			**Capacitor**		
R101	200K	1/4W	C101	47uF/100V	Electrolytic Capacitor
R102	100K	1/4W	C102	22uF/50V	Electrolytic Capacitor
R104	1K	1/4W	C103	22uF/50V	Ceramic Capacitor
R105	18K	1/4W	C104	1nF/50V	Ceramic Capacitor
R210	40K	1/4W	C201	10uF/25V	Ceramic Capacitor
R201	1K	1/4W	C202	10F/25V	Ceramic Capacitor
R211	1K	1/4W	C203	10F/25V	Ceramic Capacitor
R212	30K	1/4W	C204	10F/25V	Ceramic Capacitor
R213	18K	1/4W	C205	330uF/16V	Electrolytic Capacitor
R214	18K	1/4W	C210	10nF/50V	Ceramic Capacitor
R221	15K	1/4W	C221	1nF/50v	Ceramic Capacitor
R222	15K	1/4W	C222	1nF/50v	Ceramic Capacitor
R223	15K	1/4W	C301	2.2nF/1kv	Film
R301	10K	1/4W	-	-	-
-	-	-	-	-	-
Diode			**IC**		
D102	1N4148		IC101	FS6X1220RJ	FPS™
D103	P6KE160CA	TVS	IC201	FOD2741	Optocoupler
D201	STPS15L25G	-	-	-	-
-	-	-	-	-	-
Inductor			-	-	-
L201	2.2uH	-	-	-	-
-	-	-	-	-	-

Mechanical Dimensions

D2-Pak-6L

Unit: mm

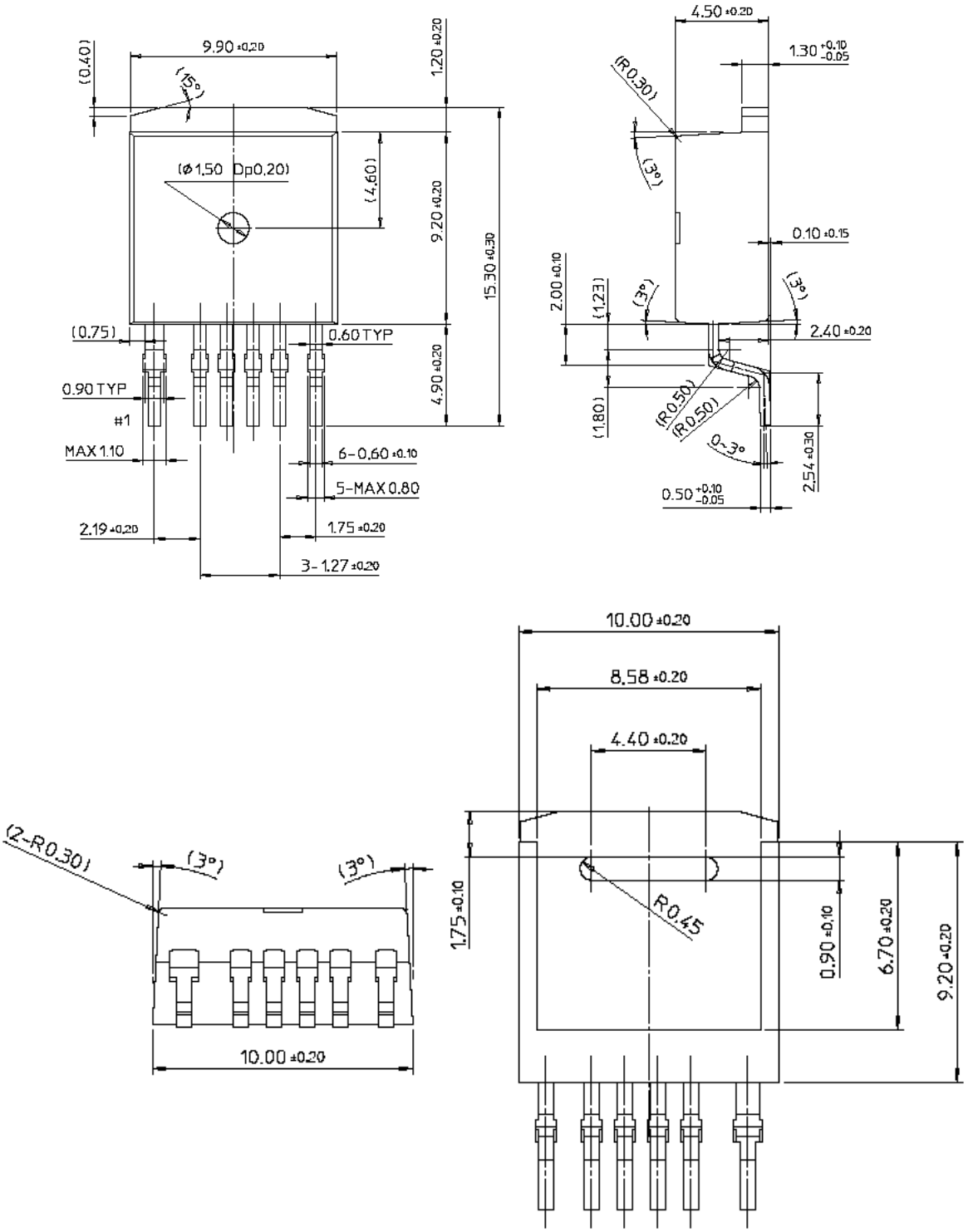

TRADEMARKS

The following are registered and unregistered trademarks Fairchild Semiconductor owns or is authorized to use and is not intended to be an exhaustive list of all such trademarks.

ACEx™
ActiveArray™
Bottomless™
Build it Now™
CoolFET™
CROSSVOLT™
DOME™
EcoSPARK™
E²CMOS™
EnSigna™
FACT™
FACT Quiet Series™
FAST®
FASTr™
FPS™
FRFET™
GlobalOptoisolator™
GTO™
HiSeC™
I²C™
i-Lo™
ImpliedDisconnect™
IntelliMAX™
ISOPLANAR™
LittleFET™
MICROCOUPLER™
MicroFET™
MicroPak™
MICROWIRE™
MSX™
MSXPro™
OCX™
OCXPro™
OPTOLOGIC®
OPTOPLANAR™
PACMAN™
POP™
Power247™
PowerEdge™
PowerSaver™
PowerTrench®
QFET®
QS™
QT Optoelectronics™
Quiet Series™
RapidConfigure™
RapidConnect™
µSerDes™
ScalarPump™
SILENT SWITCHER®
SMART START™
SPM™
Stealth™
SuperFET™
SuperSOT™-3
SuperSOT™-6
SuperSOT™-8
SyncFET™
TCM™
TinyLogic®
TINYOPTO™
TruTranslation™
UHC™
UltraFET®
UniFET™
VCX™
Wire™

Across the board. Around the world.™
The Power Franchise®
Programmable Active Droop™

DISCLAIMER

FAIRCHILD SEMICONDUCTOR RESERVES THE RIGHT TO MAKE CHANGES WITHOUT FURTHER NOTICE TO ANY PRODUCTS HEREIN TO IMPROVE RELIABILITY, FUNCTION OR DESIGN. FAIRCHILD DOES NOT ASSUME ANY LIABILITY ARISING OUT OF THE APPLICATION OR USE OF ANY PRODUCT OR CIRCUIT DESCRIBED HEREIN; NEITHER DOES IT CONVEY ANY LICENSE UNDER ITS PATENT RIGHTS, NOR THE RIGHTS OF OTHERS.

LIFE SUPPORT POLICY

FAIRCHILD'S PRODUCTS ARE NOT AUTHORIZED FOR USE AS CRITICAL COMPONENTS IN LIFE SUPPORT DEVICES OR SYSTEMS WITHOUT THE EXPRESS WRITTEN APPROVAL OF FAIRCHILD SEMICONDUCTOR CORPORATION.
As used herein:

1. Life support devices or systems are devices or systems which, (a) are intended for surgical implant into the body, or (b) support or sustain life, or (c) whose failure to perform when properly used in accordance with instructions for use provided in the labeling, can be reasonably expected to result in significant injury to the user.

2. A critical component is any component of a life support device or system whose failure to perform can be reasonably expected to cause the failure of the life support device or system, or to affect its safety or effectiveness.

PRODUCT STATUS DEFINITIONS

Definition of Terms

Datasheet Identification	Product Status	Definition
Advance Information	Formative or In Design	This datasheet contains the design specifications for product development. Specifications may change in any manner without notice.
Preliminary	First Production	This datasheet contains preliminary data, and supplementary data will be published at a later date. Fairchild Semiconductor reserves the right to make changes at any time without notice in order to improve design.
No Identification Needed	Full Production	This datasheet contains final specifications. Fairchild Semiconductor reserves the right to make changes at any time without notice in order to improve design.
Obsolete	Not In Production	This datasheet contains specifications on a product that has been discontinued by Fairchild semiconductor. The datasheet is printed for reference information only.

Rev. I18

О компании

ООО "ТрейдЭлектроникс" - это оперативные поставки широкого спектра электронных компонентов отечественного и импортного производства напрямую от производителей и с крупнейших мировых складов. Реализуемая нашей компанией продукция насчитывает более полумиллиона наименований.

Благодаря этому наша компания предлагает к поставке практически не ограниченный ассортимент компонентов как оптовыми, мелкооптовыми партиями, так и в розницу.

Наличие собственной эффективной системы логистики обеспечивает надежную поставку продукции по конкурентным ценам в точно указанные сроки.

Срок поставки со стоков в **Европе и Америке – от 3 до 14 дней.**

Срок поставки из **Азии – от 10 дней.**

Благодаря развитой сети поставщиков, помогаем в поиске и приобретении экзотичных или снятых с производства компонентов.

Предоставляем спец цены на элементы для создания инженерных сэмплов.

Упорный труд, качественный результат дают нам право быть уверенными в себе и надежными для наших клиентов.

Наша компания это:

- Гарантия качества поставляемой продукции
- Широкий ассортимент
- Минимальные сроки поставок
- Техническая поддержка
- Подбор комплектации
- Индивидуальный подход
- Гибкое ценообразование

Наша организация особенно сильна в поставках модулей, микросхем, пассивных компонентов, ксайленсах (XC), EPF, EPM и силовой электроники.

Большой выбор предлагаемой продукции, различные виды оплаты и доставки, позволят Вам сэкономить время и получить максимум выгоды от сотрудничества с нами!

Trade Electronics.ru

гарантия бесперебойности производства и качества выпускаемой продукции

Перечень производителей, продукцию которых мы поставляем на российский рынок

AMD
ANALOG DEVICES
BOURNS
Coilcraft
élantec Semiconductor, Inc.
HARRIS
Infineon
JRC
MICREL
MOTOROLA
nichicon
PHILIPS
ROHM
SGS-THOMSON
Sipex
TAIYO YUDEN
TOKO
ZILOG
Winbond
Allegro
ATMEL
BURR - BROWN
EXAR
HITACHI
intel
Lattice
muRata
OKI
QUALCOMM
SAMSUNG
SHARP
SONY
TDK
TOSHIBA
KYOCERA
ALTERA
AVX
CITILYST
CYPRESS
FAIRCHILD SEMICONDUCTOR
HOLTEK
International IOR Rectifier
LINEAR TECHNOLOGY
MITSUBISHI
National Semiconductor
ON Semiconductor
REALTEK
SANYO
SHINDENGEN
SGS
TECCOR
TUNDRA
XILINX
Amphenol
Bay Linear
CIRRUS LOGIC
DALLAS
FUJITSU
IDT
intersil
MAXIM
molex
NEC
Panasonic
RENESAS
SII
SIEMENS
ST
Texas Instruments
VISHAY
ZETEX SEMICONDUCTORS

Trade Electronics.ru

гарантия бесперебойности производства и качества выпускаемой продукции

С удовольствием будем прорабатывать для Вас поставки всех необходимых компонентов по текущим запросам для скорейшего выявления групп элементов, по которым сотрудничество именно с нашей компанией будет для Вас максимально выгодным!

С уважением,

Менеджер отдела продаж ООО

«Трейд Электроникс»

Шишлаков Евгений

8 (495)668-30-28 доб 169

manager28@tradeelectronics.ru

http://www.tradeelectronics.ru/