GM6603

3.0A LOW DROPOUT PRECISION REGULATOR

Description

GM6603 series of positive adjustable and fixed regulators is designed to provide 3A output current with low dropout voltage performance.

On-chip trimming adjusts the reference voltage with an accuracy of ±2%. Besides the features mentioned, GM6603 works well in post regulators or micro-processor power supplies where low voltage operation and fast transient response are required. GM6603 includes over current protection and thermal shutdown protection as well.

GM6605 is available in TO-220 and surface-mount TO-252 and TO-263 packages.

Features

- **Adjustable or Fixed Output**
- **Output Current of 3.0A**
- **Low Dropout, 1.15V max at 3A Output Current**
- **0.04% Line Regulation**
- **0.2 % Load Regulation**
- **Current Limit Protection**
- **100% Thermal Limit Burn-In**
- **Fast Transient Response**

Applications

- **Microprocessor Supply**
- **Post Regulators for Switching Supplies**
- **Telecommunication Systems**
- **Printer Supplies**
- **Motherboards**

Typical Application Circuit

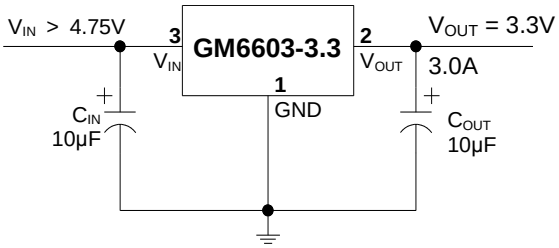

Fixed Output Voltage Version

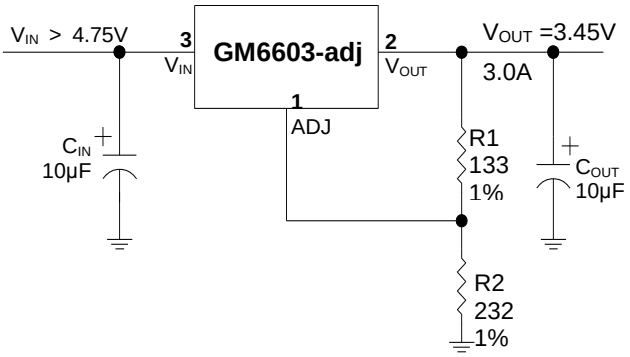

Adjustable Output Voltage Version

Notes:
1. C_{IN} needed if device is far from filter capacitors
2. C_{OUT} minimum value required for stability

Marking Information and Pin Configurations (Top View) – Pb Free Product

TO 220

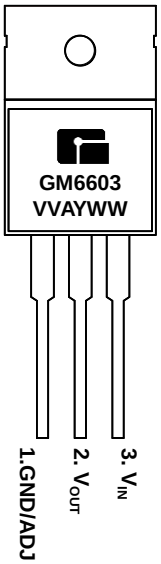

TO 263
(D^2-PAK)

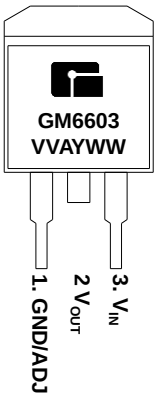

TO 252
(D-PAK)

VV: Output Voltage Codes (05: 5.0V, …A: ADJ)
A: Assembly/Test Site Code
Y: Year
WW: Week

Marking Information and Pin Configurations (Top View) – Green Product

TO 220

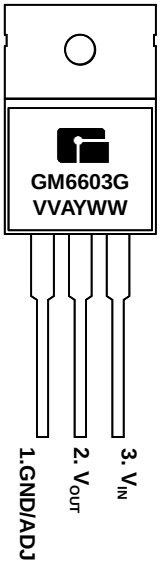

TO 263
(D^2-PAK)

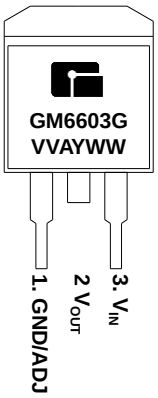

TO 252
(D-PAK)

G: Green Product
VV: Output Voltage Codes (05: 5.0V, …A: ADJ)
A: Assembly/Test Site Code
Y: Year
WW: Week

Ordering Information – Pb Free Product

Ordering Number	V_{OUT}	Package	Shipping
GM6603-ATA3T	Adj	TO-263	50 Units/Tube
GM6603-ATA3R		TO-263	800 Units / Reel
GM6603-ATB3T		TO-220	50 Units/Tube
GM6603-ATC3T		TO-252	80 Units/Tube
GM6603-ATC3R		TO-252	2,500 Units / Reel
GM6603-1.8TA3T	1.8V	TO-263	50 Units/Tube
GM6603-1.8TA3R		TO-263	800 Units / Reel
GM6603-1.8TB3T		TO-220	50 Units/Tube
GM6603-1.8TC3T		TO-252	80 Units/Tube
GM6603-1.8TC3R		TO-252	2,500 Units / Reel
GM6603-2.5TA3T	2.5V	TO-263	50 Units/Tube
GM6603-2.5TA3R		TO-263	800 Units / Reel
GM6603-2.5TB3T		TO-220	50 Units/Tube
GM6603-2.5TC3T		TO-252	80 Units/Tube
GM6603-2.5TC3R		TO-252	2,500 Units / Reel
GM6603-3.3TA3T	3.3V	TO-263	50 Units/Tube
GM6603-3.3TA3R		TO-263	800 Units / Reel
GM6603-3.3TB3T		TO-220	50 Units/Tube
GM6603-3.3TC3T		TO-252	80 Units/Tube
GM6603-3.3TC3R		TO-252	2,500 Units / Reel
GM6603-5.0TA3T	5.0V	TO-263	50 Units/Tube
GM6603-5.0TA3R		TO-263	800 Units / Reel
GM6603-5.0TB3T		TO-220	50 Units/Tube
GM6603-5.0TC3T		TO-252	80 Units/Tube
GM6603-5.0TC3R		TO-252	2,500 Units / Reel

Ordering Information – Green Product

Ordering Number	V_{OUT}	Package	Shipping
GM6603-ATA3TG	Adj	TO-263	50 Units/Tube
GM6603-ATA3RG		TO-263	800 Units / Reel
GM6603-ATB3TG		TO-220	50 Units/Tube
GM6603-ATC3TG		TO-252	80 Units/Tube
GM6603-ATC3RG		TO-252	2,500 Units / Reel
GM6603-1.8TA3TG	1.8V	TO-263	50 Units/Tube
GM6603-1.8TA3RG		TO-263	800 Units / Reel
GM6603-1.8TB3TG		TO-220	50 Units/Tube
GM6603-1.8TC3TG		TO-252	80 Units/Tube
GM6603-1.8TC3RG		TO-252	2,500 Units / Reel
GM6603-2.5TA3TG	2.5V	TO-263	50 Units/Tube
GM6603-2.5TA3RG		TO-263	800 Units / Reel
GM6603-2.5TB3TG		TO-220	50 Units/Tube
GM6603-2.5TC3TG		TO-252	80 Units/Tube
GM6603-2.5TC3RG		TO-252	2,500 Units / Reel
GM6603-3.3TA3TG	3.3V	TO-263	50 Units/Tube
GM6603-3.3TA3RG		TO-263	800 Units / Reel
GM6603-3.3TB3TG		TO-220	50 Units/Tube
GM6603-3.3TC3TG		TO-252	80 Units/Tube
GM6603-3.3TC3RG		TO-252	2,500 Units / Reel
GM6603-5.0TA3TG	5.0V	TO-263	50 Units/Tube
GM6603-5.0TA3RG		TO-263	800 Units / Reel
GM6603-5.0TB3TG		TO-220	50 Units/Tube
GM6603-5.0TC3TG		TO-252	80 Units/Tube
GM6603-5.0TC3RG		TO-252	2,500 Units / Reel

Absolute Maximum Ratings

PARAMETER	SYMBOL	RATINGS	UNITS
Input Voltage	V_I	15	V
Power Dissipation	P_D	Internally Limited	W
Operating Junction Temperature	T_J	- 40 to 125	°C
Storage Temperature	T_{stg}	- 60 to 150	°C
Lead Temperature 1.6mm (1/6 inch) from case for 10 seconds		260	°C

Block Diagram

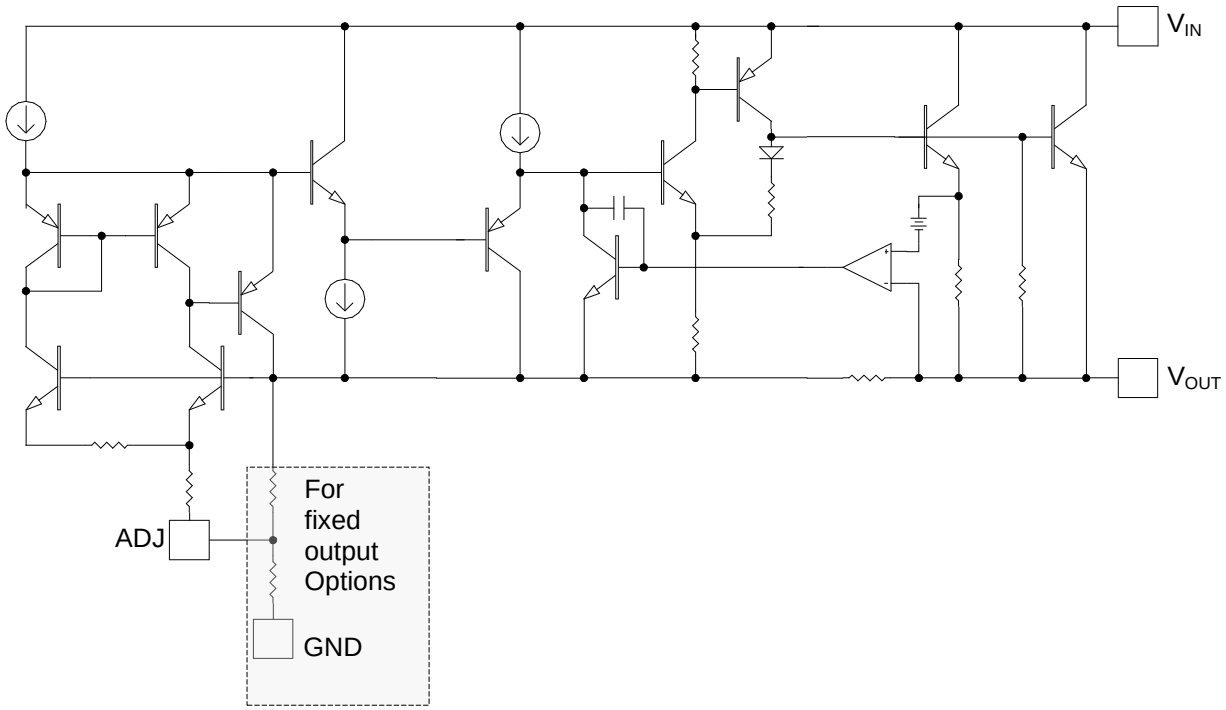

Electrical Characteristics (T_I = 25°C, Inless otherwise noted)

Parameter		Symbol	Test Condition	Min	Typ	Max	Unit
Reference Voltage	GM6603-A	V_{REF}	I_{OUT} = 10mA, V_{IN} = 5.0V	1.238	1.250	1.262	V
			10mA ≤ I_{OUT} ≤ 3A, 1.5V ≤ V_{IN} – V_{OUT} ≤10V	1.225	1.250	1.275	
Output Voltage	GM6603-1.8	V_O	I_{OUT} = 10mA, V_{IN} = 3.3V	1.782	1.800	1.818	V
			10mA ≤ I_{OUT} ≤ 3A, 1.5V ≤ V_{IN} – V_{OUT} ≤10V	1.764	1.800	1.836	
	GM6603-2.5		I_{OUT} = 10mA, V_{IN} = 4V	2.475	2.500	2.525	
			10mA ≤ I_{OUT} ≤ 3A, 1.5V ≤ V_{IN} – V_{OUT} ≤10V	2.460	2.500	2.540	
	GM6603-3.3		I_{OUT} = 10mA, V_{IN} = 4.8V	3.267	3.300	3.333	
			10mA ≤ I_{OUT} ≤ 3A, 1.5V ≤ V_{IN} – V_{OUT} ≤10V	3.247	3.300	3.353	
	GM6603-5.0		I_{OUT} = 10mA, V_{IN} = 6.5V	4.950	5.000	5.050	
			10mA ≤ I_{OUT} ≤ 3A, 1.5V ≤ V_{IN} – V_{OUT} ≤10V	4.920	5.000	5.080	
Line Regulation	GM6603-A	ΔV_{OI}	I_{OUT} = 10mA		0.04	0.20	%
	GM6603-1.8		I_{OUT} = 10mA, 3.3V ≤V_{IN} ≤10V				
	GM6603-2.5		I_{OUT} = 10mA, 4V ≤V_{IN} ≤10V				
	GM6603-3.3		I_{OUT} = 10mA, 4.8V ≤V_{IN} ≤10V				
	GM6603-5.0		I_{OUT} = 10mA, 6.5V ≤V_{IN} ≤10V				
Load Regulation	GM6603-A	ΔV_{OL}	V_{IN} –V_{OUT} =1.5V, 10mA ≤ I_{OUT} ≤ 3A		0.2	0.40	%
	GM6603-1.8		V_{IN} = 3.3V, 10mA ≤ I_{OUT} ≤ 3A				
	GM6603-2.5		V_{IN} = 4.0V, 10mA ≤ I_{OUT} ≤ 3A				
	GM6603-3.3		V_{IN} = 4.8V, 10mA ≤ I_{OUT} ≤ 3A				
	GM6603-5.0		V_{IN} = 6.5V, 10mA ≤ I_{OUT} ≤ 3A				
Dropout Voltage		V_D	I_{OUT} = 3A		1.15	1.3	V
Current Limit		I_{CL}	V_{IN} –V_{OUT} =3V	3	4.5		A
Minimum Load Current		$I_{O(MIN)}$	V_{IN} = 5.0V		3	7	mA
Quiescent Current	GM6603-1.8	I_Q	V_{IN} = 3.3V, 10mA ≤ I_{OUT} ≤ 3A		7	10	mA
	GM6603-2.5		V_{IN} = 4.0V, 10mA ≤ I_{OUT} ≤ 3A				
	GM6603-3.3		V_{IN} = 4,8V, 10mA ≤ I_{OUT} ≤ 3A				
	GM6603-5.0		V_{IN} = 6.5V, 10mA ≤ I_{OUT} ≤ 3A				
Adjust Pin Current	GM6603-A	I_{ADJ}	I_{OUT} = 10mA, 1.5V ≤V_{IN} – V_{OUT} ≤10V		40	90	μA
Temperature Coefficient			I_{OUT} = 10mA, V_{IN} – V_{OUT} = 1.5V		0.005		%/°C
Ripple Rejection		R_A	I_{OUT} = 3A, V_{IN} – V_{OUT} = 1.5V	60	80		dB

Application Information

GM6603 series linear regulators provide fixed and adjustable output voltages at currents up to 3.0A. These regulators are protected against over-current conditions and include thermal shutdown protection. The GM6603 has a composite PNP-NPN output transistor and require an output capacitor for stability.

A detailed procedure for selecting this capacitor is as below:

Stability Considerations

The circuit design used in the GM6603 series requires the use of an output capacitor as part of the device frequency compensation. The addition of 150µF aluminum electrolytic or a 22µF solid tantalum on the output will ensure stability for all operating conditions.

When the adjustment terminal is bypassed with a capacitor to improve the ripple rejection, the requirement for an output capacitor increases. The value of 22µF tantalum or 150µF aluminum covers all cases of bypassing the adjustment terminal. Without bypassing the adjustment terminal smaller capacitors can be used with equally good results.

To ensure good transient response with heavy load current changes capacitor values on the order of 100µF are used in the output of many regulators. To further improve stability and transient response of these devices larger values of output capacitor can be used.

Protection Diodes

Unlike older regulators, the GM6603 family does not need any protection diodes between the adjustment pin and the output and from the output to the input to prevent over stressing the die. Internal resistors are limiting the internal current paths on the GM6603 adjustment pin, therefore even with capacitors on the adjustment pin no protection diode is needed to ensure device safety under short-circuit conditions.

Microsecond surge currents of 50A to 100A can be handled by the internal diode between the input and output pins of the device. In normal operations it is difficult to get those values of surge currents even with the use of large output capacitances. If high value output capacitors are used, such as 1000µF to 5000µF at the input pin, is instantaneously shorted to ground, damage can occur. A diode from output to input is recommended, when a crowbar circuit at the input of the GM6603 is used. Normal power supply cycling or even plugging and unplugging in the system will not generate current large enough to do any damage.

The adjustment pin can be driven on a transient basis ±25V, with respect to the output without any device degradation. As with any IC regulator, none the protection circuitry will be functional and the internal transistors will break down if the maximum input to output voltage differential is exceeded.

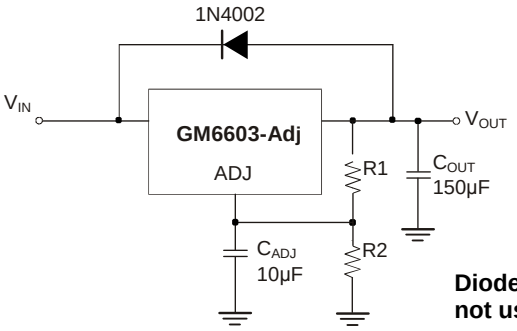

Diodes between the input and output are not usually needed.

Ripple Rejection

The ripple rejection values are measured with the adjustment pin bypassed. The impedance of the adjust pin capacitor at the ripple frequency should be less than the value of R1 (normally 100. to 120.) for a proper bypassing and ripple rejection approaching the values shown. The size of the required adjust pin capacitor is a function of the input ripple frequency. If R1=100. at 120Hz the adjust pin capacitor should be 25µF. At 10kHz only 0.22µF is needed. The ripple rejection will be a function of output voltage, in circuits without an adjust pin bypass capacitor. The output ripple will increase directly as a ratio of the output voltage to the reference voltage (V_{OUT} / V_{REF}).

Output Voltage Sensing

GM6603 series is a three-terminal regulator, so it cannot provide true remote load sensing. Load regulation is limited by the resistance of the conductors connecting the regulator to the load. For best results, GM6603 should be connected as shown 1n F1gure 2.

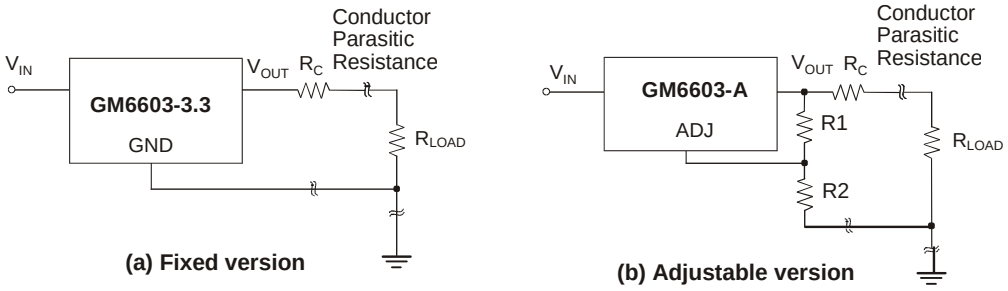

Figure 1. Conductor Parasitic Resistance Effects are Minimized by this Grounding Scheme.

Calculating Power Dissipation and Heat Sink Requirements

GM6603 series include thermal shutdown and current limit circuitry to protect the devices. However, high power regulators normally operate at high junction temperatures so it is important to calculate the power dissipation and junction temperatures accurately to be sure to use an adequate heat sink. The case is connected to V_{OUT} on GM6603, so electrical isolation may be required for some applicat1ons. Thermal compound should always be used with high current regulators like GM6603.

The thermal characteristics of an IC depend on four factors:

1. Maximum Ambient Temperature T_A (°C)
2. Power Dissipation P_D (Watts)
3. Maximum Junction Temperature T_J (°C)
4. Thermal Resistance Junction to amb1ent θ_{JA}

The relationship of these four factors is expressed by equation (1):

$$T_J = T_A + P_D \times \theta_{JA}$$

Maximum ambient temperature and power dissipation are determ1ned by the design while the maximum junction temperature and thermal resistance depend on the manufacturer and the package type.

The maximum power dissipation for a regulator is expressed by equation (2):

$$P_{D(MAX)} = (V_{IN(MAX)} - V_{OUT(MIN)}) \times I_{OUT(MIN)} + V_{IN(MIN)} \times I_Q$$

where:

$V_{IN(MAX)}$ is the maximum input voltage,
$V_{OUT(MIN)}$ is the minimum output voltage,
$I_{OUT(MAX)}$ is the maximum output current
I_Q is the max1mum quiescent current at $I_{OUT(MAX)}$.

A heat sink effect1vely increases the surface area of the package to improve the flow of heat away from the IC into the air. Each material in the heat flow path between the IC and the environment has a thermal resistance. Like series electrical resistances, these resistance are summed to determine θ_{JA}, the total thermal resistance between the junction and the air. This is expressed by equation (3):

$$\theta_{JA} = \theta_{JC} + \theta_{CS} + \theta_{SA}$$

where:

θ_{JC} is the thermal resistance of Junction to Case,
θ_{CS} is the thermal resistance of Case to Heat Sink,
θ_{SA} is the thermal resistance of Heat Sink to Ambient air.

The value for θ_{JA} is calculated using equation (3) and the result can be substituted in equation (1). The value for θ_{CS} is 3.5°C/W for a given package typed based on an average d1ie size. For a high current regulator such as GM6603, the majority of the heat is generated in the power transistor sect1on.

Typical Performance Characteristics

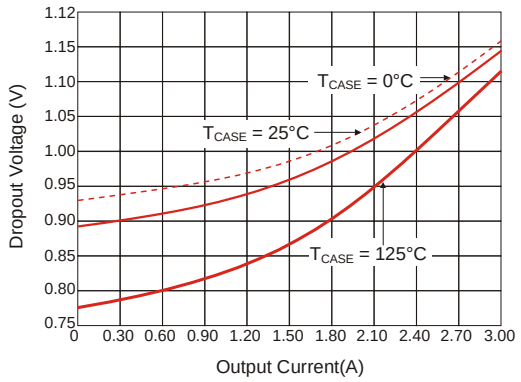

Figure 1. Dropout Voltage vs. Output Current

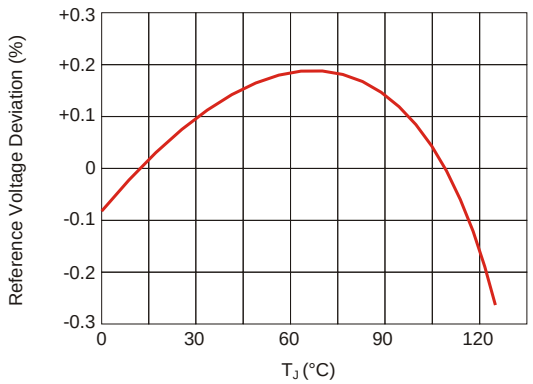

Figure 2. Bandgap Reference Voltage Deviation Vs. Temperature

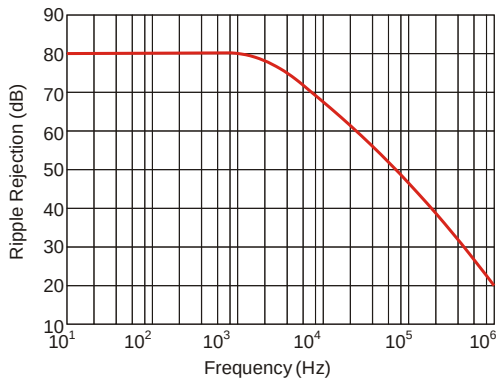

Figure 3. Ripple Rejection vs. Frequency

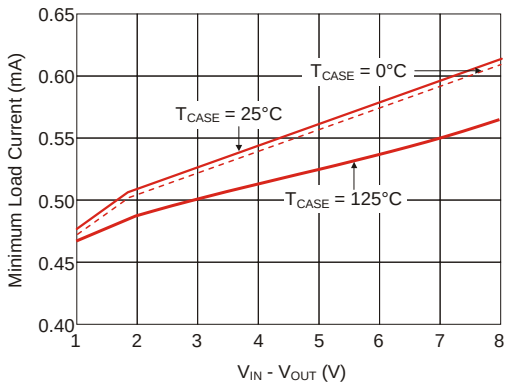

Figure 4. Minimum Load Current vs. V_{IN} - V_{OUT}

Package Outline Dimensions – TO263

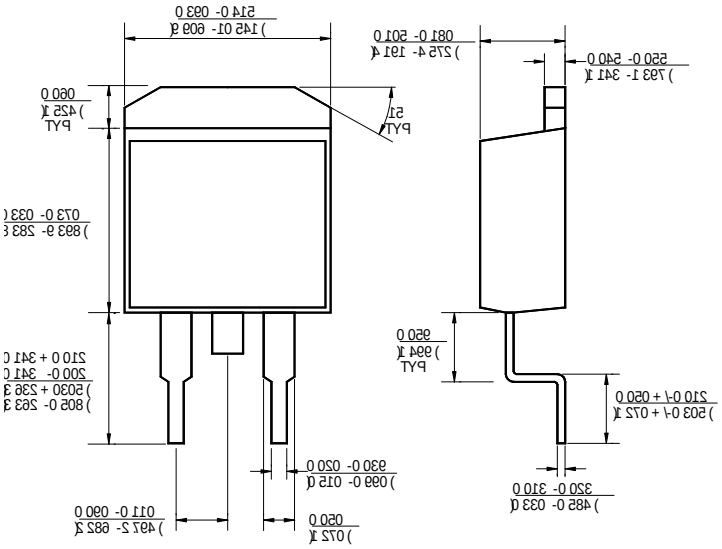

Package Outline Dimensions – TO220

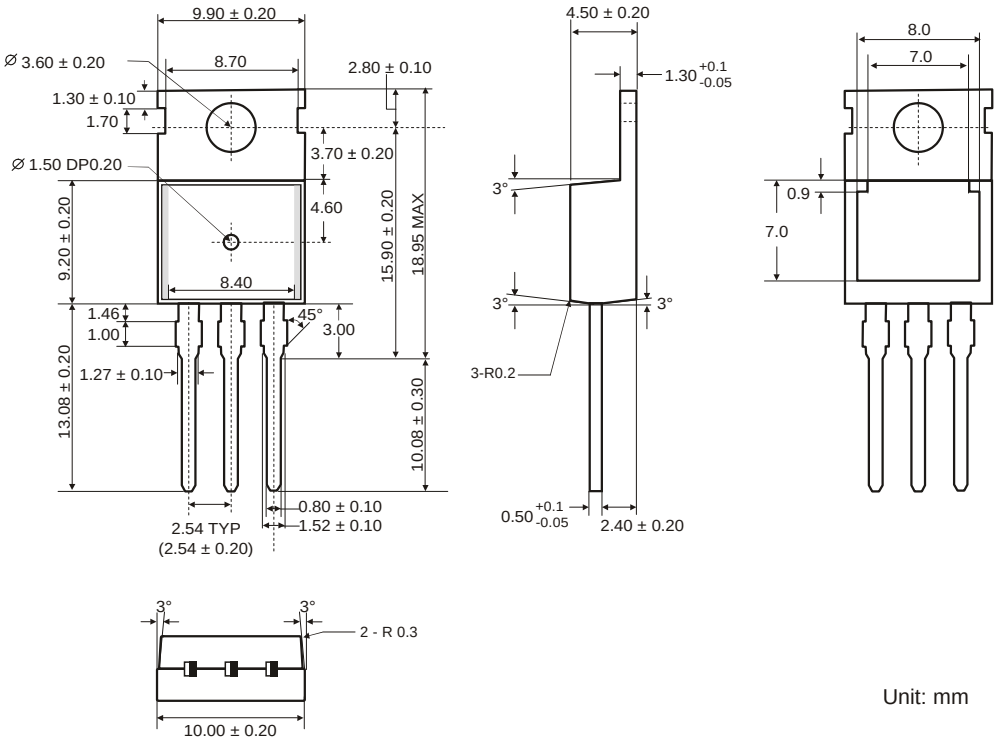

Unit: mm

Package Outline Dimensions – TO252

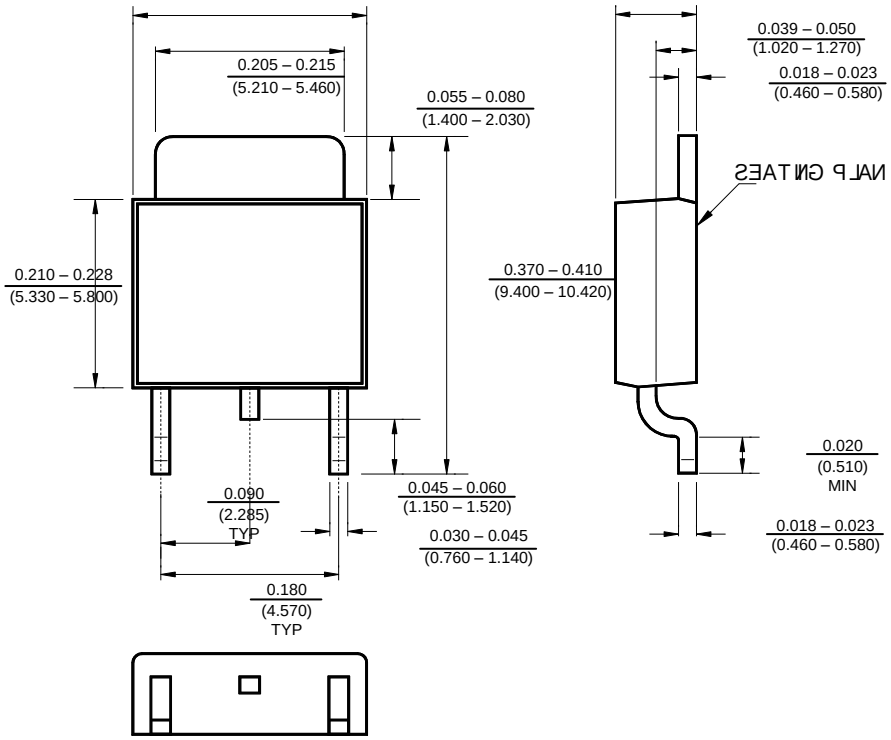

Note:

Pb-free products:

- RoHS compliant and compatible with the current require-ments of IPC/JEDEC J-STD-020.
- Suitable for use in Pb-free soldering processes with 100% matte tin (Sn) plating.

Green products:

- Lead-free (RoHS compliant)
- Halogen free(Br or Cl does not exceed 900ppm by weight in homogeneous material and total of Br and Cl does not exceed 1500ppm by weight)

Ordering Number

GM	6603	- 1.8	TA3	T	G
APM Gamma Micro	Circuit Type	Output Voltages	Package Type	Shipping Type	
		A: ADJ 1.8: 1.8V 2.5: 2.5V 3.3: 3.3V 5.0: 5.0V	TA3: TO263 TB3: TO220 TC3: TO252	T: Tube R: Tape & Reel	Blank: Pb-free G:Green

Note:

Pb-free products:

- RoHS compliant and compatible with the current require-ments of IPC/JEDEC J-STD-020.
- Suitable for use in Pb-free soldering processes with 100% matte tin (Sn) plating.

Green products:

- Lead-free (RoHS compliant)
- Halogen free(Br or Cl does not exceed 900ppm by weight in homogeneous material and total of Br and Cl does not exceed 1500ppm by weight)

О компании

ООО "ТрейдЭлектроникс" - это оперативные поставки широкого спектра электронных компонентов отечественного и импортного производства напрямую от производителей и с крупнейших мировых складов. Реализуемая нашей компанией продукция насчитывает более полумиллиона наименований.

Благодаря этому наша компания предлагает к поставке практически не ограниченный ассортимент компонентов как оптовыми, мелкооптовыми партиями, так и в розницу.

Наличие собственной эффективной системы логистики обеспечивает надежную поставку продукции по конкурентным ценам в точно указанные сроки.

Срок поставки со стоков в **Европе и Америке – от 3 до 14 дней.**

Срок поставки из **Азии – от 10 дней.**

Благодаря развитой сети поставщиков, помогаем в поиске и приобретении экзотичных или снятых с производства компонентов.

Предоставляем спец цены на элементы для создания инженерных сэмплов.

Упорный труд, качественный результат дают нам право быть уверенными в себе и надежными для наших клиентов.

Наша компания это:

- Гарантия качества поставляемой продукции
- Широкий ассортимент
- Минимальные сроки поставок
- Техническая поддержка
- Подбор комплектации
- Индивидуальный подход
- Гибкое ценообразование

Наша организация особенно сильна в поставках модулей, микросхем, пассивных компонентов, ксайленсах (XC), EPF, EPM и силовой электроники.

Большой выбор предлагаемой продукции, различные виды оплаты и доставки, позволят Вам сэкономить время и получить максимум выгоды от сотрудничества с нами!

Trade Electronics.ru

гарантия бесперебойности производства и качества выпускаемой продукции

Перечень производителей, продукцию которых мы поставляем на российский рынок

AMD
ANALOG DEVICES
BOURNS
Coilcraft
élantec Semiconductor, Inc.
HARRIS
Infineon
JRC
MICREL
MOTOROLA
nichicon
PHILIPS
ROHM
SGS-THOMSON
Sipex
TAIYO YUDEN
TOKO
ZILOG
Winbond
Allegro
ATMEL
BURR - BROWN
EXAR
HITACHI
intel
Lattice
muRata
OKI
QUALCOMM
SAMSUNG
SHARP
SONY
TDK
TOSHIBA
KYOCERA
ALTERA
AVX
CITILYST
CYPRESS
FAIRCHILD SEMICONDUCTOR
HOLTEK
International IOR Rectifier
LINEAR TECHNOLOGY
MITSUBISHI
National Semiconductor
ON Semiconductor
REALTEK
SANYO
SHINDENGEN
SGS
TECCOR
TUNDRA
XILINX
Amphenol
Bay Linear
CIRRUS LOGIC
DALLAS
FUJITSU
IDT
intersil
MAXIM
molex
NEC
Panasonic
RENESAS
SII
SIEMENS
ST
Texas Instruments
VISHAY
ZETEX SEMICONDUCTORS

Trade Electronics.ru

гарантия бесперебойности производства и качества выпускаемой продукции

С удовольствием будем прорабатывать для Вас поставки всех необходимых компонентов по текущим запросам для скорейшего выявления групп элементов, по которым сотрудничество именно с нашей компанией будет для Вас максимально выгодным!

С уважением,

Менеджер отдела продаж ООО

«Трейд Электроникс»

Шишлаков Евгений

8 (495)668-30-28 доб 169

manager28@tradeelectronics.ru

http://www.tradeelectronics.ru/