DATA SHEET

For a complete data sheet, please also download:

- The IC06 74HC/HCT/HCU/HCMOS Logic Family Specifications
- The IC06 74HC/HCT/HCU/HCMOS Logic Package Information
- The IC06 74HC/HCT/HCU/HCMOS Logic Package Outlines

74HC/HCT4511
BCD to 7-segment latch/decoder/driver

Product specification
File under Integrated Circuits, IC06

December 1990

Philips Semiconductors

PHILIPS

BCD to 7-segment latch/decoder/driver 74HC/HCT4511

FEATURES

- Latch storage of BCD inputs
- Blanking input
- Lamp test input
- Driving common cathode LED displays
- Guaranteed 10 mA drive capability per output
- Output capability: non-standard
- I_{CC} category: MSI

GENERAL DESCRIPTION

The 74HC/HCT4511 are high-speed Si-gate CMOS devices and are pin compatible with “4511” of the “4000B” series. They are specified in compliance with JEDEC standard no. 7A.

The 74HC/HCT4511 are BCD to 7-segment latch/decoder/drivers with four address inputs (D_1 to D_4), an active LOW latch enable input ($\overline{LE}$), an active LOW ripple blanking input ($\overline{BI}$), an active LOW lamp test input ($\overline{LT}$), and seven active HIGH segment outputs (Q_a to Q_g).

When $\overline{LE}$ is LOW, the state of the segment outputs (Q_a to Q_g) is determined by the data on D_1 to D_4.
When $\overline{LE}$ goes HIGH, the last data present on D_1 to D_4 are stored in the latches and the segment outputs remain stable.
When $\overline{LT}$ is LOW, all the segment outputs are HIGH independent of all other input conditions. With $\overline{LT}$ HIGH, a LOW on $\overline{BI}$ forces all segment outputs LOW. The inputs $\overline{LT}$ and $\overline{BI}$ do not affect the latch circuit.

APPLICATIONS

- Driving LED displays
- Driving incandescent displays
- Driving fluorescent displays
- Driving LCD displays
- Driving gas discharge displays

QUICK REFERENCE DATA

GND = 0 V; T_{amb} = 25 °C; $t_r = t_f$ = 6 ns

SYMBOL	PARAMETER	CONDITIONS	TYPICAL		UNIT
			HC	HCT	
t_{PHL}/ t_{PLH}	propagation delay	C_L = 15 pF; V_{CC} = 5 V			
	D_n to Q_n		24	24	ns
	$\overline{LE}$ to Q_n		23	24	ns
	$\overline{BI}$ to Q_n		19	20	ns
	$\overline{LT}$ to Q_n		12	13	ns
C_I	input capacitance		3.5	3.5	pF
C_{PD}	power dissipation capacitance per latch	notes 1 and 2	64	64	pF

Notes

1. C_{PD} is used to determine the dynamic power dissipation (P_D in μW):

   $P_D = C_{PD} \times V_{CC}^2 \times f_i + \sum (C_L \times V_{CC}^2 \times f_o)$ where:

   f_i = input frequency in MHz

   f_o = output frequency in MHz

   $\sum (C_L \times V_{CC}^2 \times f_o)$ = sum of outputs

   C_L = output load capacitance in pF

   V_{CC} = supply voltage in V
2. For HC the condition is V_I = GND to V_{CC}

   For HCT the condition is V_I = GND to V_{CC} – 1.5 V

ORDERING INFORMATION

See *"74HC/HCT/HCU/HCMOS Logic Package Information"*.

PIN DESCRIPTION

PIN NO.	SYMBOL	NAME AND FUNCTION
3	$\overline{LT}$	lamp test input (active LOW)
4	$\overline{BI}$	ripple blanking input (active LOW)
5	$\overline{LE}$	latch enable input (active LOW)
7, 1, 2, 6	D_1 to D_4	BCD address inputs
8	GND	ground (0 V)
13, 12, 11, 10, 9, 15, 14	Q_a to Q_g	segments outputs
16	V_{CC}	positive supply voltage

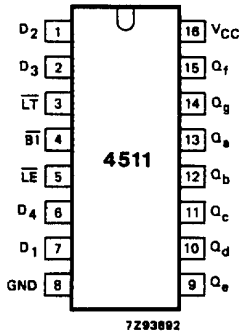

Fig.1 Pin configuration.

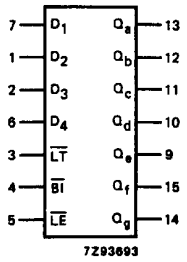

Fig.2 Logic symbol.

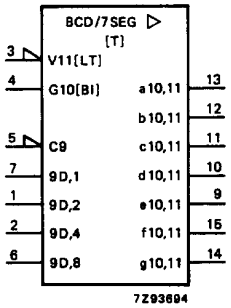

Fig.3 IEC logic symbol.

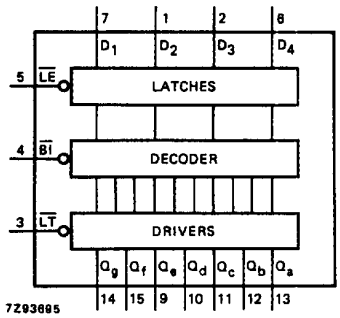

Fig.4 Functional diagram.

FUNCTION TABLE

INPUTS							OUTPUTS							DISPLAY
$\overline{LE}$	$\overline{BI}$	$\overline{LT}$	D_4	D_3	D_2	D_1	Q_a	Q_b	Q_c	Q_d	Q_e	Q_f	Q_g	
X	X	L	X	X	X	X	H	H	H	H	H	H	H	8
X	L	H	X	X	X	X	L	L	L	L	L	L	L	blank
L	H	H	L	L	L	L	H	H	H	H	H	H	L	0
L	H	H	L	L	L	H	L	H	H	L	L	L	L	1
L	H	H	L	L	H	L	H	H	L	H	H	L	H	2
L	H	H	L	L	H	H	H	H	H	H	L	L	H	3
L	H	H	L	H	L	L	L	H	H	L	L	H	H	4
L	H	H	L	H	L	H	H	L	H	H	L	H	H	5
L	H	H	L	H	H	L	L	L	H	H	H	H	H	6
L	H	H	L	H	H	H	H	H	H	L	L	L	L	7
L	H	H	H	L	L	L	H	H	H	H	H	H	H	8
L	H	H	H	L	L	H	H	H	H	L	L	H	H	9
L	H	H	H	L	H	L	L	L	L	L	L	L	L	blank
L	H	H	H	L	H	H	L	L	L	L	L	L	L	blank
L	H	H	H	H	L	L	L	L	L	L	L	L	L	blank
L	H	H	H	H	L	H	L	L	L	L	L	L	L	blank
L	H	H	H	H	H	L	L	L	L	L	L	L	L	blank
L	H	H	H	H	H	H	L	L	L	L	L	L	L	blank
H	H	H	X	X	X	X	(1)							(1)

Note

1. Depends upon the BCD-code applied during the LOW-to-HIGH transition of $\overline{LE}$.
   H = HIGH voltage level
   L = LOW voltage level
   X = don't care

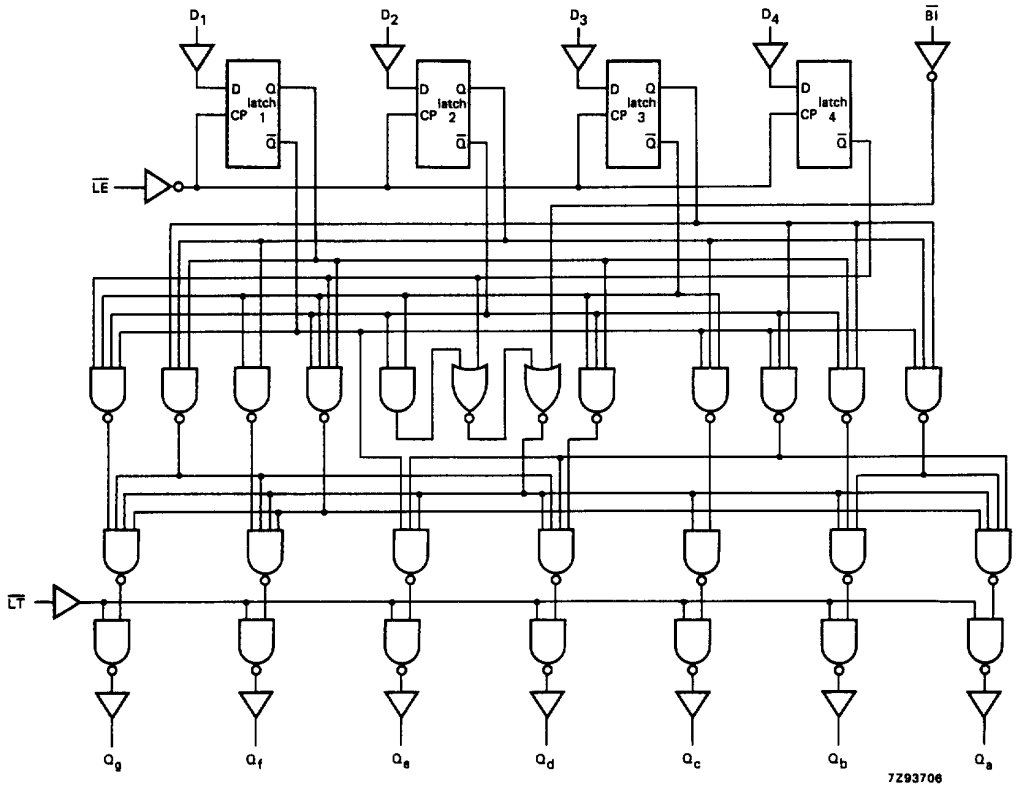

Fig.5 Logic diagram.

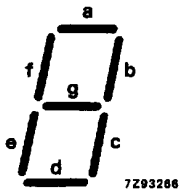

Fig.6 Segment designation.

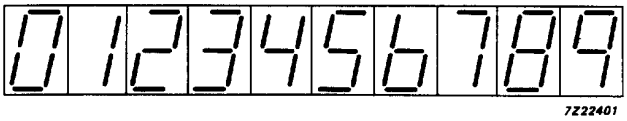

Fig.7 Display.

DC CHARACTERISTICS FOR 74HC

For the DC characteristics see *"74HC/HCT/HCU/HCMOS Logic Family Specifications"*.

Output capability: standard, excepting V_{OH} which is given below
I_{CC} category: MSI

Non-standard DC characteristics for 74HC

Voltages are referenced to GND (ground = 0 V)

SYMBOL	PARAMETER	T_{amb} (°C)							UNIT	TEST CONDITIONS		
		74HC										
		+25			−40 to +85		−40 to +125			V_{CC} (V)	V_I	$-I_O$ (mA)
		min.	typ.	max.	min.	max.	min.	max.				
V_{OH}	HIGH level output voltage	3.98 3.60			3.84 3.35		3.70 3.10		V	4.5	V_{IH} or V_{IL}	7.5 10.0
V_{OH}	HIGH level output voltage	5.60 5.48 4.80			5.45 5.34 4.50		5.35 5.20 4.20		V	6.0	V_{IH} or V_{IL}	7.5 10.0 15.0

AC CHARACTERISTICS FOR 74HC

GND = 0 V; $t_r = t_f = 6$ ns; $C_L = 50$ pF

SYMBOL	PARAMETER	T_{amb} (°C)							UNIT	TEST CONDITIONS	
		74HC								V_{CC} (V)	WAVEFORMS
		+25			−40 to +85		−40 to +125				
		min.	typ.	max.	min.	max.	min.	max.			
t_{PHL}/ t_{PLH}	propagation delay D_n to Q_n		77 28 22	300 60 51		375 75 64		450 90 77	ns	2.0 4.5 6.0	Fig.8
t_{PHL}/ t_{PLH}	propagation delay $\overline{LE}$ to Q_n		74 27 22	270 54 46		330 68 58		405 81 69	ns	2.0 4.5 6.0	Fig.9
t_{PHL}/ t_{PLH}	propagation delay $\overline{BI}$ to Q_n		61 22 18	220 44 37		275 55 47		330 66 56	ns	2.0 4.5 6.0	Fig.10
t_{PHL}/ t_{PLH}	propagation delay $\overline{LT}$ to Q_n		41 15 12	150 30 26		190 38 33		225 45 38	ns	2.0 4.5 6.0	Fig.8
t_{THL}/ t_{TLH}	output transition time		19 7 6	75 15 13		95 19 16		110 22 19	ns	2.0 4.5 6.0	Figs 8, 9 and 10
t_W	latch enable pulse width LOW	80 16 14	11 4 3		100 20 17		120 24 20		ns	2.0 4.5 6.0	Fig.9
t_{su}	set-up time D_n to $\overline{LE}$	60 12 10	14 5 4		75 15 13		90 18 15		ns	2.0 4.5 6.0	Fig.11
t_h	hold time D_n to $\overline{LE}$	0 0 0	−11 −4 −3		0 0 0		0 0 0		ns	2.0 4.5 6.0	Fig.11

DC CHARACTERISTICS FOR 74HCT

For the DC characteristics see *"74HC/HCT/HCU/HCMOS Logic Family Specifications"*.

Output capability: standard, excepting V_{OH} which is given below
I_{CC} category: MSI

Non-standard DC characteristics for 74HCT

Voltages are referenced to GND (ground = 0 V)

SYMBOL	PARAMETER	T_{amb} (°C)							UNIT	TEST CONDITIONS		
		74HCT										
		+25			−40 to +85		−40 to +125			V_{CC} (V)	V_I	$-I_O$ (mA)
		min.	typ.	max.	min.	max.	min.	max.				
V_{OH}	HIGH level output voltage	3.98 3.60			3.84 3.35		3.70 3.10		V	4.5	V_{IH} or V_{IL}	7.5 10.0

Note to HCT types

The value of additional quiescent supply current (ΔI_{CC}) for a unit load of 1 is given in the family specifications.
To determine ΔI_{CC} per input, multiply this value by the unit load coefficient shown in the table below.

INPUT	UNIT LOAD COEFFICIENT
$\overline{LT}$, $\overline{LE}$	1.50
$\overline{BI}$, D_n	0.30

AC CHARACTERISTICS FOR 74HCT

GND = 0 V; $t_r = t_f = 6$ ns; $C_L = 50$ pF

SYMBOL	PARAMETER	T_{amb} (°C)							UNIT	TEST CONDITIONS	
		74HCT								V_{CC} (V)	WAVEFORMS
		+25			−40 to +85		−40 to +125				
		min.	typ.	max.	min.	max.	min.	max.			
t_{PHL}/ t_{PLH}	propagation delay D_n to Q_n		28	60		75		90	ns	4.5	Fig.8
t_{PHL}/ t_{PLH}	propagation delay $\overline{LE}$ to Q_n		27	54		68		81	ns	4.5	Fig.9
t_{PHL}/ t_{PLH}	propagation delay $\overline{BI}$ to Q_n		23	44		55		66	ns	4.5	Fig.10
t_{PHL}/ t_{PLH}	propagation delay $\overline{LT}$ to Q_n		16	30		38		45	ns	4.5	Fig.8
t_{THL}/ t_{TLH}	output transition time		7	15		19		22	ns	4.5	Figs 8, 9 and 10
t_W	latch enable pulse width LOW	16	5		20		24		ns	4.5	Fig.9
t_{su}	set-up time D_n to $\overline{LE}$	12	5		15		18		ns	4.5	Fig.11
t_h	hold time D_n to $\overline{LE}$	0	−4		0		0		ns	4.5	Fig.11

AC WAVEFORMS

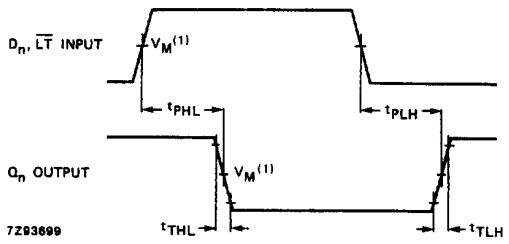

(1) HC : V_M = 50%; V_I = GND to V_{CC}.
HCT: V_M = 1.3 V; V_I = GND to 3 V.

Fig.8 Waveforms showing the input (D_n, $\overline{LT}$) to output (Q_n) propagation delays and the output transition times.

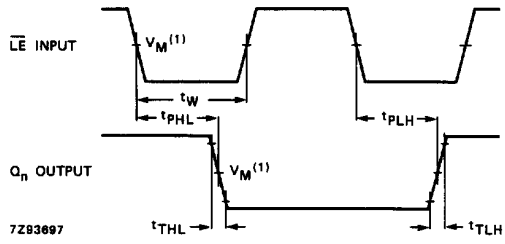

(1) HC : V_M = 50%; V_I = GND to V_{CC}.
HCT: V_M = 1.3 V; V_I = GND to 3 V.

Fig.9 Waveforms showing the input ($\overline{LE}$) to output (Q_n) propagation delays and the latch enable pulse width.

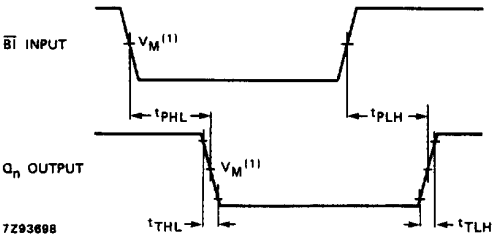

(1) HC : V_M = 50%; V_I = GND to V_{CC}.
HCT: V_M = 1.3 V; V_I = GND to 3 V.

Fig.10 Waveforms showing the input ($\overline{BI}$) to output (Q_n) propagation delays.

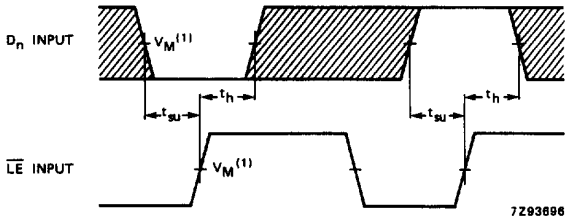

The shaded areas indicate when the input is permitted to change for predictable output performance.

(1) HC : V_M = 50%; V_I = GND to V_{CC}.
HCT: V_M = 1.3 V; V_I = GND to 3 V.

Fig.11 Waveforms showing the data set-up and hold times for D_n input to $\overline{LE}$ input.

APPLICATION DIAGRAMS

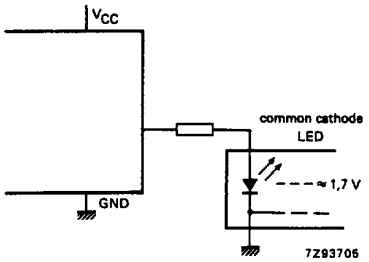

Fig.12 Connection to common cathode LED display readout.

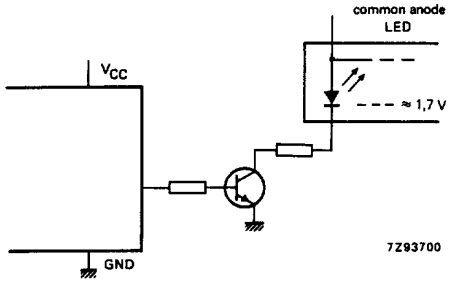

Fig.13 Connection to common anode LED display readout.

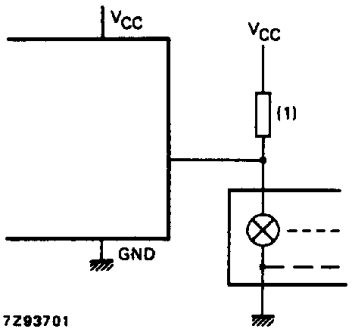

(1) A filament pre-warm resistor to reduce thermal shock and to increase effective cold resistance of the filament is recommended.

Fig.14 Connection to incandescent display readout.

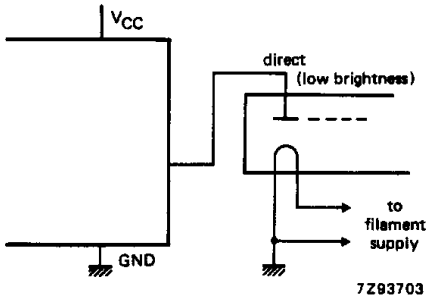

Fig.15 Connection to fluorescent display readout.

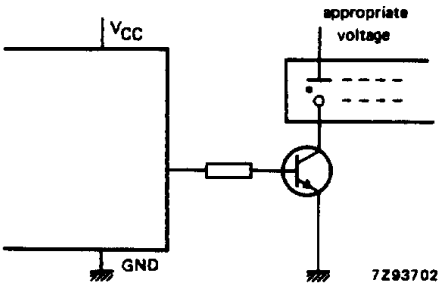

Fig.16 Connection to gas discharge display readout.

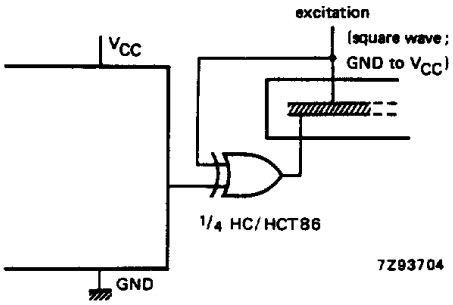

Fig.17 Connection to LCD display readout. (Direct DC drive is not recommended as it can shorten the life of LCD displays).

PACKAGE OUTLINES

See *"74HC/HCT/HCU/HCMOS Logic Package Outlines"*.

О компании

ООО "ТрейдЭлектроникс" - это оперативные поставки широкого спектра электронных компонентов отечественного и импортного производства напрямую от производителей и с крупнейших мировых складов. Реализуемая нашей компанией продукция насчитывает более полумиллиона наименований.

Благодаря этому наша компания предлагает к поставке практически не ограниченный ассортимент компонентов как оптовыми, мелкооптовыми партиями, так и в розницу.

Наличие собственной эффективной системы логистики обеспечивает надежную поставку продукции по конкурентным ценам в точно указанные сроки.

Срок поставки со стоков в **Европе и Америке – от 3 до 14 дней.**

Срок поставки из **Азии – от 10 дней.**

Благодаря развитой сети поставщиков, помогаем в поиске и приобретении экзотичных или снятых с производства компонентов.

Предоставляем спец цены на элементы для создания инженерных сэмплов.

Упорный труд, качественный результат дают нам право быть уверенными в себе и надежными для наших клиентов.

Наша компания это:

- Гарантия качества поставляемой продукции
- Широкий ассортимент
- Минимальные сроки поставок
- Техническая поддержка
- Подбор комплектации
- Индивидуальный подход
- Гибкое ценообразование

Наша организация особенно сильна в поставках модулей, микросхем, пассивных компонентов, ксайленсах (XC), EPF, EPM и силовой электроники.

Большой выбор предлагаемой продукции, различные виды оплаты и доставки, позволят Вам сэкономить время и получить максимум выгоды от сотрудничества с нами!

Trade Electronics.ru

гарантия бесперебойности производства и качества выпускаемой продукции

Перечень производителей, продукцию которых мы поставляем на российский рынок

AMD
ANALOG DEVICES
BOURNS
Coilcraft
élantec Semiconductor, Inc.
HARRIS
Infineon
JRC
MICREL
MOTOROLA
nichicon
PHILIPS
ROHM
SGS-THOMSON
Sipex
TAIYO YUDEN
TOKO
ZILOG
Winbond
Allegro
ATMEL
BURR - BROWN
EXAR
HITACHI
intel
Lattice
muRata
OKI
QUALCOMM
SAMSUNG
SHARP
SONY
TDK
TOSHIBA
KYOCERA
ALTERA
AVX
CITILYST
CYPRESS
FAIRCHILD SEMICONDUCTOR
HOLTEK
International IOR Rectifier
LINEAR TECHNOLOGY
MITSUBISHI
National Semiconductor
ON Semiconductor
REALTEK
SANYO
SHINDENGEN
SGS
TECCOR
TUNDRA
XILINX
Amphenol
Bay Linear
CIRRUS LOGIC
DALLAS
FUJITSU
IDT
intersil
MAXIM
molex
NEC
Panasonic
RENESAS
SII
SIEMENS
ST
Texas Instruments
VISHAY
ZETEX SEMICONDUCTORS

Trade Electronics.ru

гарантия бесперебойности производства и качества выпускаемой продукции

С удовольствием будем прорабатывать для Вас поставки всех необходимых компонентов по текущим запросам для скорейшего выявления групп элементов, по которым сотрудничество именно с нашей компанией будет для Вас максимально выгодным!

С уважением,

Менеджер отдела продаж ООО

«Трейд Электроникс»

Шишлаков Евгений

8 (495)668-30-28 доб 169

manager28@tradeelectronics.ru

http://www.tradeelectronics.ru/