AT&T Microelectronics

LH1263 E & M Signaling Circuit

Features

- Switches controlled by TTL compatible data inputs
- One switch with 250 mA current-break capability
- Two switches have low ON-resistance
  — <8 Ω at 250 mA
  — <35 Ω at 85 mA (current-limit switch)
- No EMI
- 180 mA driver circuit for external relays (TTL compatible)
- Clean, bounce-free switching
- Solid-state reliability
- High-voltage monolithic IC fabricated in a dielectric process

Description

The LH1263AE E & M Signaling Circuit replaces electromechanical relays and discrete components that are utilized in line signaling interface circuits such as E & M trunk signaling and FX ground-start applications. This IC is comprised of logic-programmable, latched switch control; three high-voltage switches (one for overcurrent protection); a ground-reference comparator, and a driver for external relays. The latches store data, which establishes this IC as a Type I, II, III, IV, or V interface. The ground reference comparator and a few resistors provide the E lead and M lead detector. The overcurrent protection eliminates the need for a positive temperature coefficient (PTC) resistor or a ballast lamp on the M lead battery supply.

The LH1263AE device can be configured to perform Type I, II, III, IV, and V interfaces. Multiple ICs are required for some of the interfaces. The LH1263AE device is available in a 20-pin, plastic DIP.

0050026 0019748 242

Description (continued)

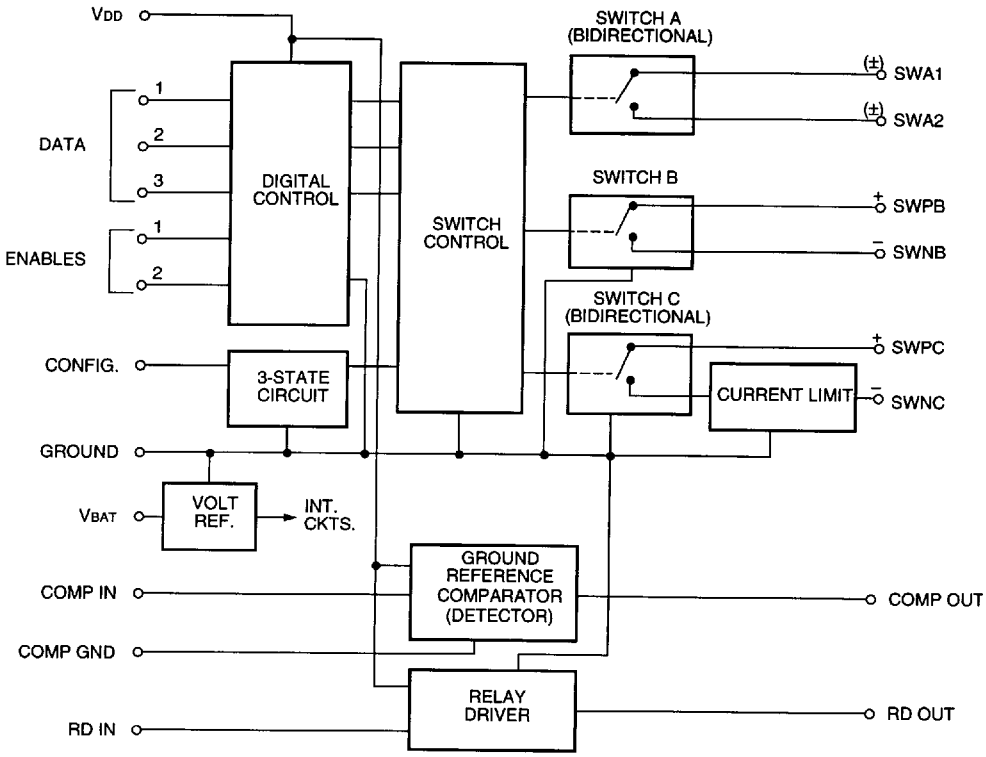

Figure 1. Functional Block Diagram

0050026 0019749 189

Pin Information

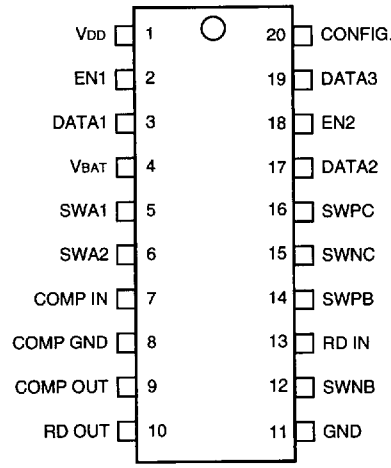

Figure 2. Pin Diagram

Table 1. Pin Descriptions

Pin	Symbol	Name/Function
1	VDD	**Positive Supply Voltage**. Operating voltage is +5.0 V (±0.25 V).
2 18	EN1 EN2	**ENABLE**. These TTL compatible inputs enable (logic-high) or disable (logic-low) inputs DATA1 and DATA3 respectively.
3 17 19	DATA1 DATA2 DATA3	**DATA.** These TTL-compatible inputs provide the logic for controlling switches 1, 2, and 3.
4	VBAT	**VBAT.** Connections for the negative external power (operating voltage is –42.5 V to –60 V). This pin is typically connected to a central office supply in telephone applications.
5 6	SWA1 SWA2	**Outputs for Bidirectional Switch A**. Loads can be connected to these outputs irrespective of polarity.
7 9	COMP IN COMP OUT	**Comparator**. Ground reference comparator input and output respectively.
8	COMP GND	**Comparator Ground**. An independent ground or common for the comparator.
10 13	RD OUT RD IN	**Relay I/O**. Relay output and input respectively.
11	GND	**Ground**. Common ground point for device circuitry (except the comparator).
12 14	SWNB SWPB	**Outputs for Switch B**. SWNB and SWPB connect to the negative and positive potentials respectively of a load for Switch B.
15 16	SWNC SWPC	**Outputs for Switch C**. SWNC and SWPC connect to the negative and positive potentials respectively of a load for Switch C.
20	CONFIG	**Configuration**. Pin for determining one of three possible logic combinations for switch control (see Table 7).

0050026 0019750 9T0

Absolute Maximum Ratings (T_A = 25 °C)

Stresses in excess of the Absolute Maximum Ratings can cause permanent damage to the device. These are absolute stress ratings only. Functional operation of the device is not implied at these or any other conditions in excess of those given in the operational sections of the data sheet. Exposure to Absolute Maximum Ratings for extended periods of time can adversely affect device reliability.

Table 2. Absolute Maximum Ratings

Parameter	Symbol	Min	Max	Unit
Ambient Operating Temperature Range	T_A	–40	+85	°C
Storage Temperature Range	T_{stg}	–40	+125	°C
Pin Soldering Temperature (t = 15 s max)	T_S	—	300	°C
Supply Voltage (V_{DD} to Common)	V_S	—	5.50	V
Supply Voltage (V_{NEG} to Common)	V_S	–60	—	V
Switch A and B Terminal Voltage	—	–200	+200	V
Switch C Terminal Voltage Pin 15 (Pin 16 at GND) Pin 16 (Pin 15 at –48 V)	 — —	 –80 –200	 +200 +152	 V V
dc Switch Current Capacity Switch A and B Switch C	 — —	 — —	 360 *	 mA mA

* Switch C is current limited between 140 mA and 360 mA.

Table 3. Excessive Fault Conditions

Description	Condition	Specifications	Switch
Fault Current	On On Shutdown	4 A to 0.8 A in 10 ms 1.5 A for 1 s Between 140 mAdc & 360 mAdc	A A C
Lightning	On/Off	1000 V, 10 x 1000 µs, 2.5 A peak 1000 V, 10 x 1000 µs, 50 mA peak	A B, C
Power Cross	On/Off	600 Vrms — 1 s, 1 kΩ	A

Recommended Operating Conditions

Table 4. Supply Voltages

Name	Symbol	Value	Unit
Supply Voltage	V_{DD}	+5.0 ± 0.25	V
Supply Voltage	V_{BAT}	–42.5 to –52.5	V

Table 5. Comparator Operation (BAT/GND Detector)

COMP GND pin is connected to an external ground reference.

Input Voltage at COMP IN*	Resulting Output Voltage at COMP OUT	Operational Conditions at COMP OUT
+50 mV to V_{DD}	2.4 V to V_{DD} (TTL high)	Sources current up to 50 µA
≤–50 mV	0 V to 0.4 V (TTL low)	Sinks current up to 500 µA

* COMP IN is internally diode clamped to V_{DD} and COMP GND with a maximum current of 20 mA.

0050026 0019751 837

Recommended Operating Conditions (continued)

Table 6. Relay Driver Operation

Input Voltage at RD IN	Resulting Output Voltage at RD OUT	Operational Conditions at RD OUT
Low — 0 V to 0.8 V	≤0.9 V	Sinks current ≤ 180 mA
High — 2.2 V to V_{DD}	Open circuit	≤50 µA leakage at ≤ V_{DD}

Electrical Characteristics T_A = 25 °C

Parameter	Test Condition	Min	Typ	Max	Unit
Power Supply Current V_{DD}	Measure I_{VDD} (See Figure 7.)	—	0.5	5.0	mA
Power Supply Current V_{BAT}	Measure I_{BAT} (See Figure 7.)	—	1.6	2.5	mA
Switch A On Voltage	Measure pin 6 = +85 mA (See Figure 8.)	—	1.0	2.0	V
	Measure pin 6 = –85 mA (See Figure 8.)	—	1.0	2.0	V
Switch B On Voltage	Measure pin 14 = 250 mA (See Figure 9.)	—	1.6	2.0	V
Switch C On Voltage	Measure pin 16 = 85 mA (See Figure 10.)	—	2.2	3.0	V
Switch A Break Current*	Pin 6 = +130 mA (See Figure 11.)	—			
	Pin 6 = –130 mA (See Figure 11.)				
Switch B Break Current*	Pin 14 = 250 mA (See Figure 12.)	—			
Switch A Leakage Current	V_S = +200 V, Measure +I (See Figure 13.)	—	<1.0	10	µA
	V_S = –200 V, Measure –I (See Figure 13.)	—	<–1.0	–10	µA
	V_S = +152 V, Measure +I (See Figure 14.)	—	<1.0	10	µA
	V_S = –248 V, Measure –I (See Figure 14.)	—	<–1.0	–10	µA
Switch B Leakage Current	V_S = +200 V, Measure +I (See Figure 15.)	—	<1.0	10	µA
	V_S = –200 V, Measure –I (See Figure 15.)	—	<–1.0	–10	µA
	V_S = +152 V, Measure +I (See Figure 16.)	—	<1.0	10	µA
	V_S = –248 V, Measure –I (See Figure 16.)	—	<–1.0	–10	µA
Switch C Leakage Current	V_S = +200 V, Measure +I (See Figure 17.)	—	<1.0	10	µA
	V_S = –80 V, Measure –I (See Figure 17.)	—	<–1.0	–10	µA
	V_S = +152 V, Measure +I (See Figure 18.)	—	<1.0	10	µA
	V_S = –200 V, Measure –I (See Figure 18.)	—	<–1.0	–10	µA
Relay Driver On Voltage	Measure Pin 10 (See Figure 19.)	—	—	0.9	V
Relay Driver Output Leakage Current	(See Figure 20.)	—	—	50	µA
Comparator Output:	Measure Pin 9 (See Figure 21.)				
On Voltage	V_S = –50 mV, Pin 9 = +500 µA	—	—	0.4	V
Off Voltage	V_S = +50 mV, Pin 9 = –50 µA	2.4	—	—	V
Switch C Shutdown†	(See Figure 22.)	—			
Digital Input Low-level Voltage	—	—	—	0.8	V
Digital Input High-level Voltage	—	2.2	—	—	V
Feedthrough Capacitance:					
Switch A	Switch off, f = 1 MHz	—	9.0	—	pF
Switch B	Switch off, f = 1 MHz	—	2.0	—	pF
Switch C	Switch off, f = 1 MHz	—	65	—	pF

* The test figures show the initial setup conditions (relay in the normally closed position). The relay is activated to complete the break-current capability test.

† This switch has overcurrent protection. Figure 22 describes the fault condition. S1 is to be closed after all other connections have been made. Typical average current on pin 15 during a fault is less than 30 mA. The shutdown current window is between 140 mA and 360 mA.

0050026 0019752 773

Typical Characteristic Curves

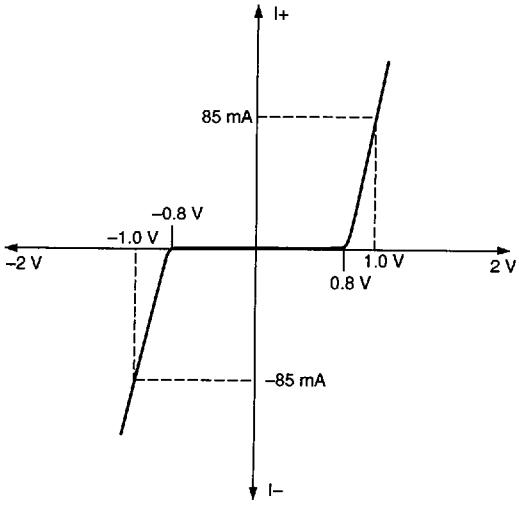

Figure 3. Typical ON Characteristics Switch A

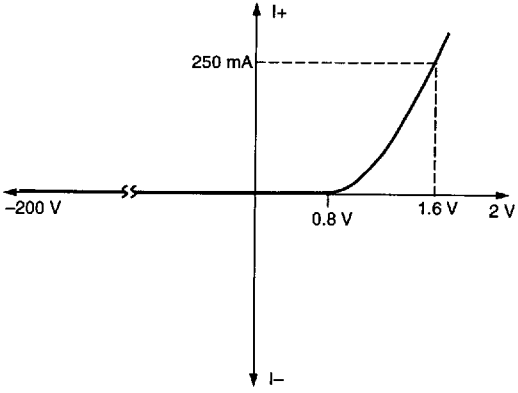

Figure 4. Typical ON Characteristics Switch C

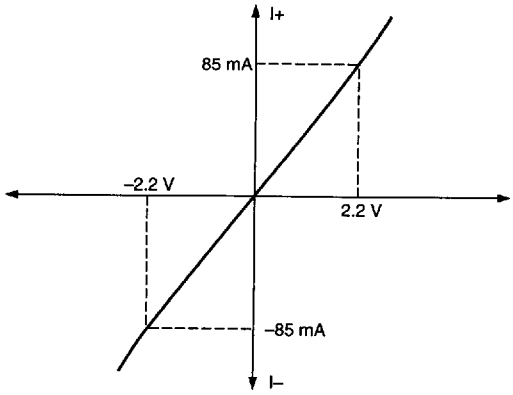

Figure 5. Typical ON Characteristics Switch B

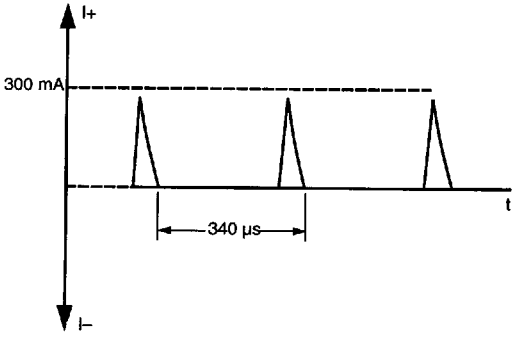

Figure 6. Switch C, Current-Limit Mode

0050026 0019753 60T

Logic Table

Table 7. Logic Table

Pins EN1 and EN2 are enabled (logic high).

Inputs				Device State		
DATA1	DATA2	DATA3	CONFIG	Switch A	Switch B	Switch C
Low	Low	Low	Ground	Closed	Open	Open
Low	Low	High	Ground	Closed	Open	Open
Low	High	Low	Ground	Open	Open	Open
Low	High	High	Ground	Open	Open	Open
High	Low	Low	Ground	Closed	Open	Open
High	Low	High	Ground	Closed	Closed	Closed
High	High	Low	Ground	Open	Open	Open
High	High	High	Ground	Open	Closed	Closed
Low	Low	Low	N/C	Closed	Open	Open
Low	Low	High	N/C	Closed	Open	Closed
Low	High	Low	N/C	Open	Open	Open
Low	High	High	N/C	Open	Open	Closed
High	Low	Low	N/C	Closed	Open	Open
High	Low	High	N/C	Closed	Open	Closed
High	High	Low	N/C	Open	Closed	Open
High	High	High	N/C	Open	Closed	Closed
Low	Low	Low	V_{BAT}	Closed	Open	Open
Low	Low	High	V_{BAT}	Closed	Open	Closed
Low	High	Low	V_{BAT}	Open	Open	Open
Low	High	High	V_{BAT}	Open	Open	Closed
High	Low	Low	V_{BAT}	Open	Closed	Open
High	Low	High	V_{BAT}	Open	Closed	Closed
High	High	Low	V_{BAT}	Open	Open	Open
High	High	High	V_{BAT}	Open	Open	Closed

0050026 0019754 546

Test Circuits

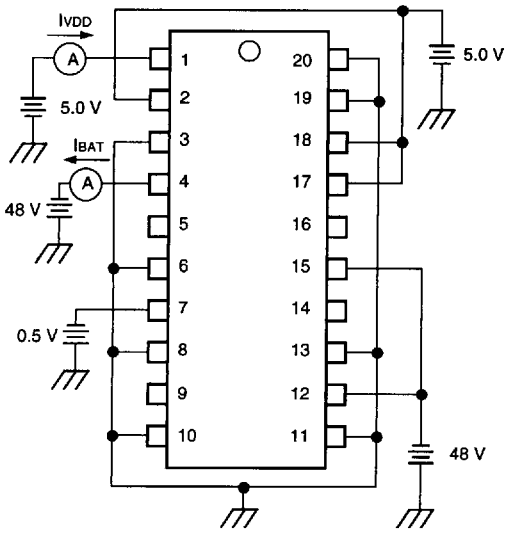

Figure 7. Supply Currents

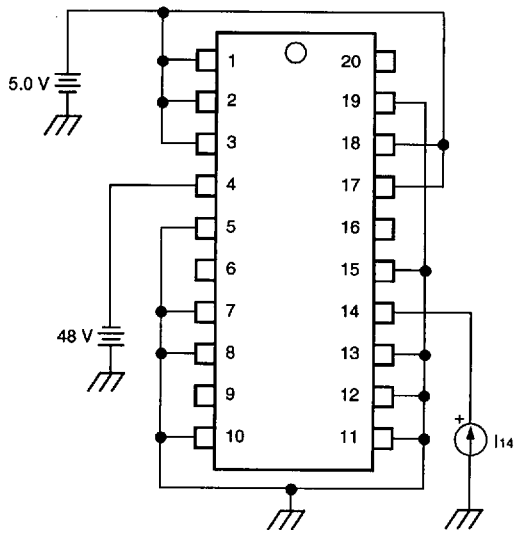

Figure 9. Positive ON Voltage — Switch B

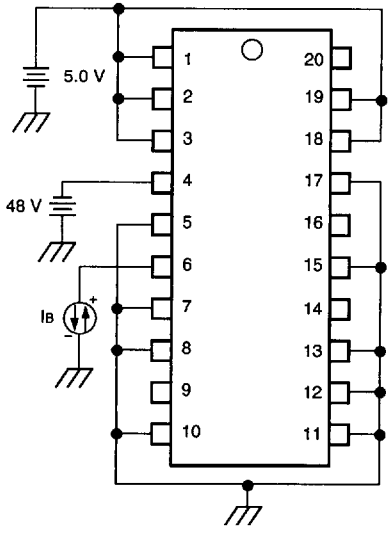

Figure 8. Positive/Negative ON Voltage — Switch A

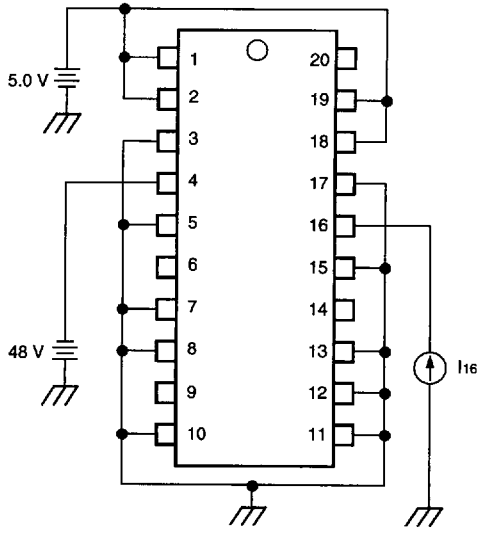

Figure 10. Positive ON Voltage — Switch C

0050026 0019755 482

Test Circuits (continued)

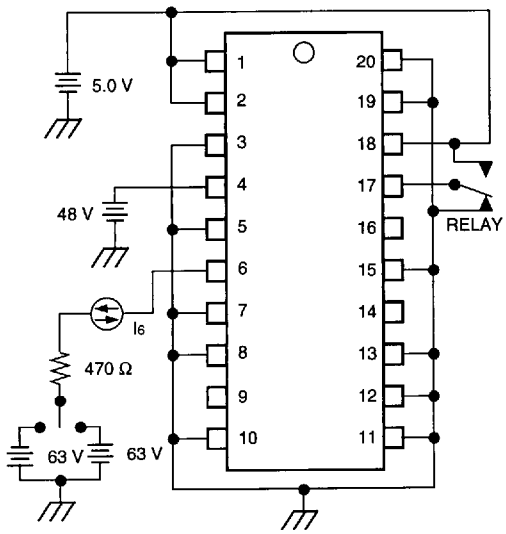

Figure 11. Break-Current Capability — Switch A

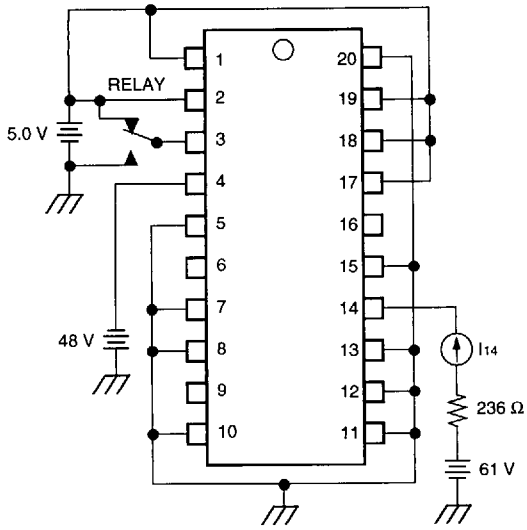

Figure 12. Break-Current Capability — Switch B

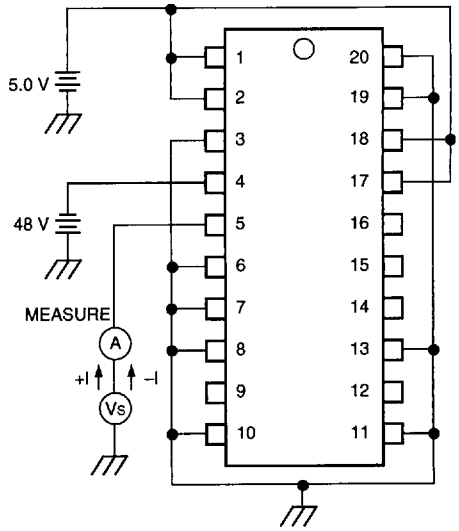

Figure 13. High-Voltage Leakage Current — Switch A

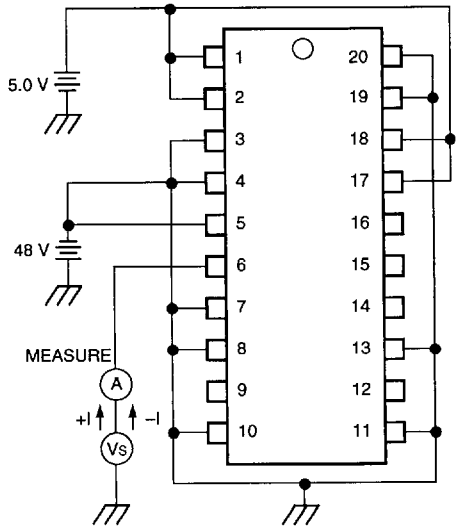

Figure 14. High-Voltage Leakage Current — Switch A

0050026 0019756 319

Test Circuits (continued)

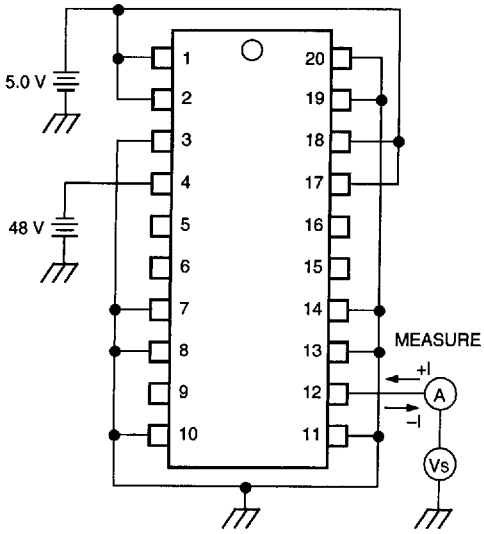

Figure 15. High-Voltage Leakage Current — Switch B

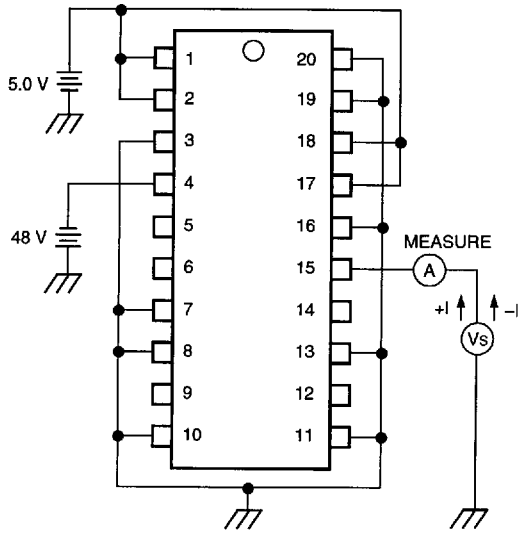

Figure 17. High-Voltage Leakage Current — Switch C

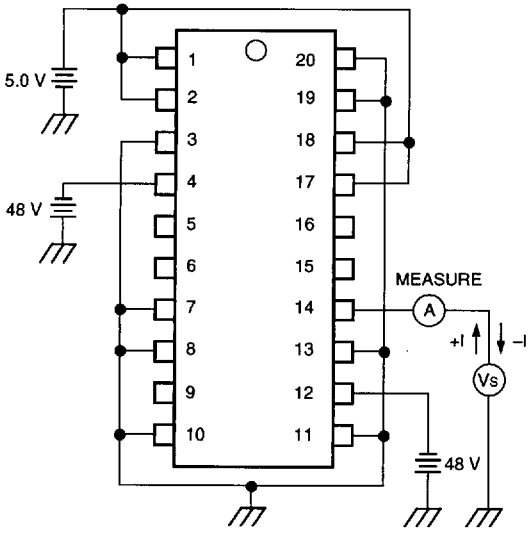

Figure 16. High-Voltage Leakage Current — Switch B

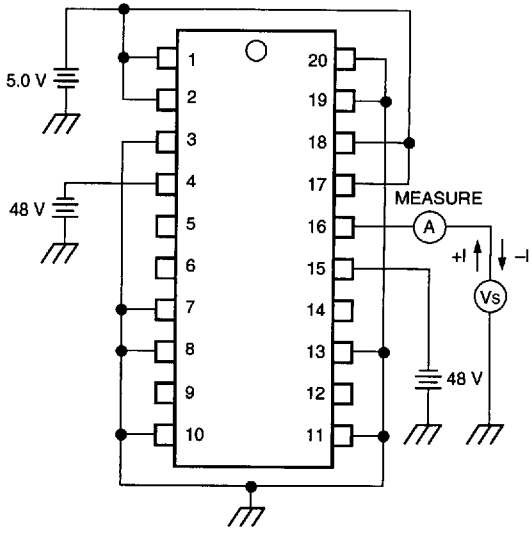

Figure 18. High-Voltage Leakage Current — Switch C

0050026 0019757 255

Test Circuits (continued)

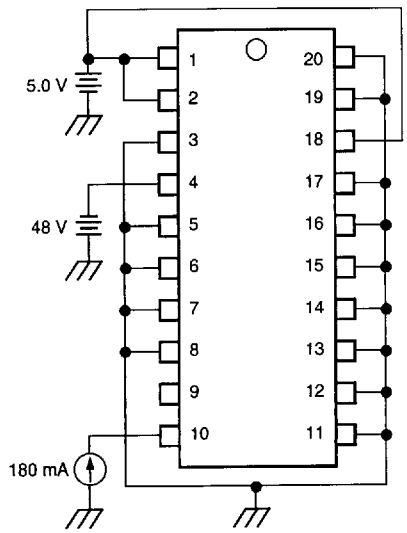

Figure 19. Relay Driver ON Voltage

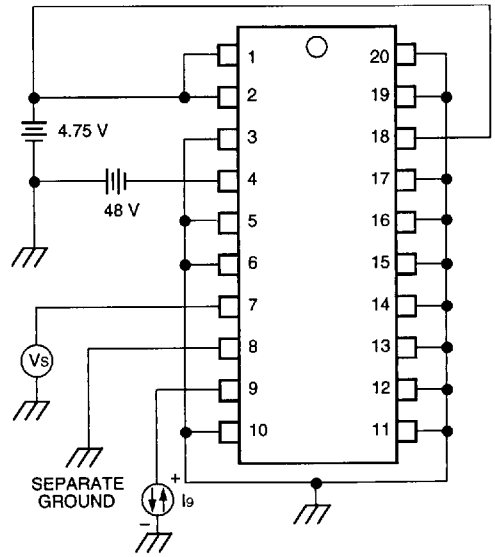

Figure 21. Comparator ON/OFF Voltage

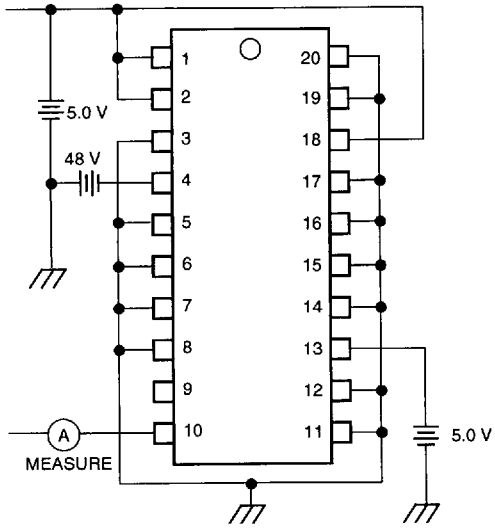

Figure 20. Relay Driver Output, Leakage Current

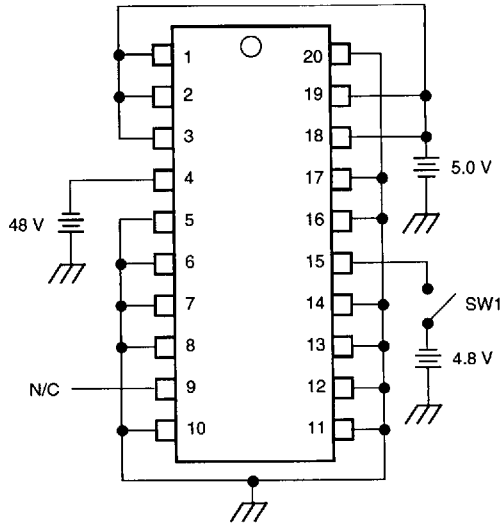

Figure 22. Switch C Shutdown Test

0050026 0019758 191

Simplified Output Circuits

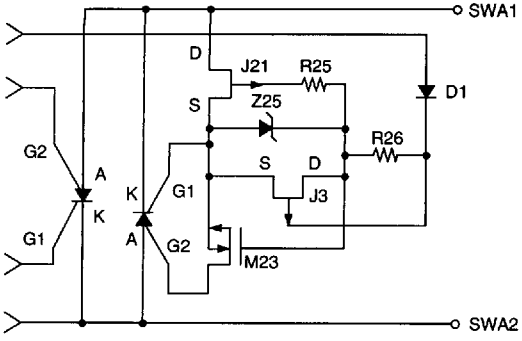

Figure 23. Switch A Output

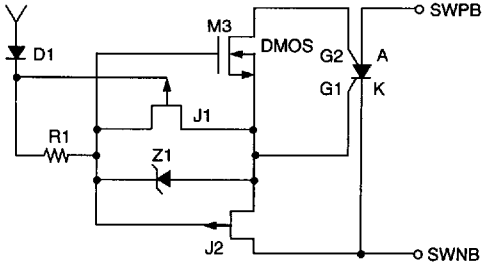

Figure 24. Switch B Output

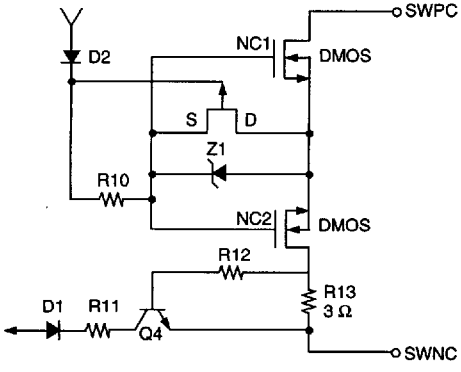

Figure 25. Switch C Output

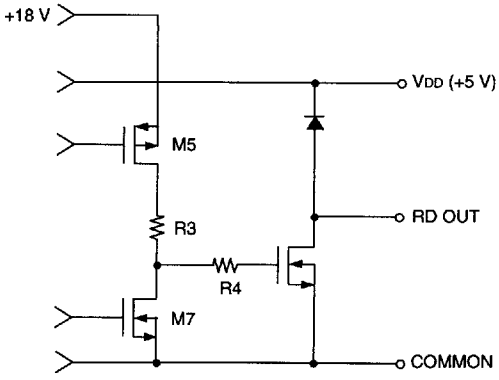

Figure 26. Relay Driver Output

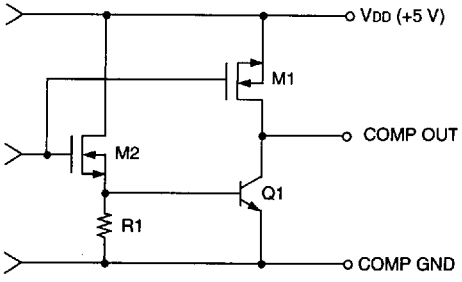

Figure 27. Comparator (Detector) Output

0050026 0019759 028

Applications

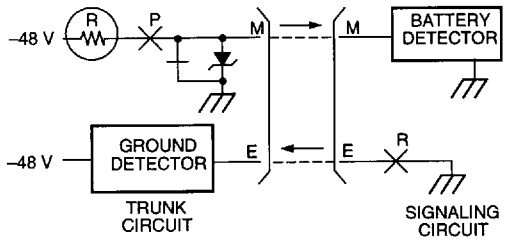

Figure 28. Type I Interface

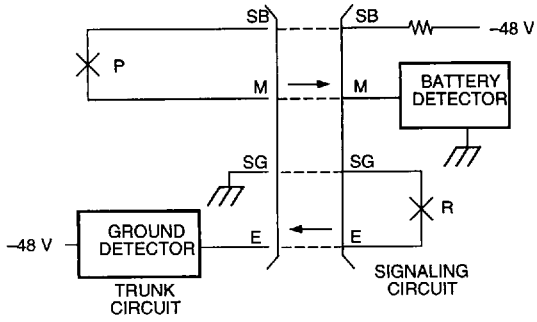

Figure 29. Type II Interface

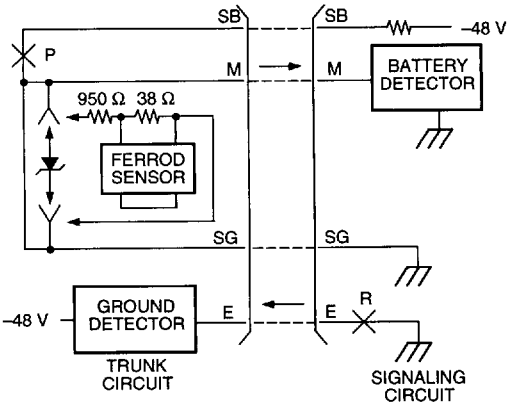

Figure 30. Type III Interface

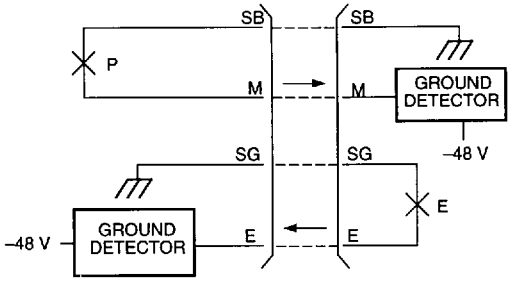

Figure 31. Type IV Interface

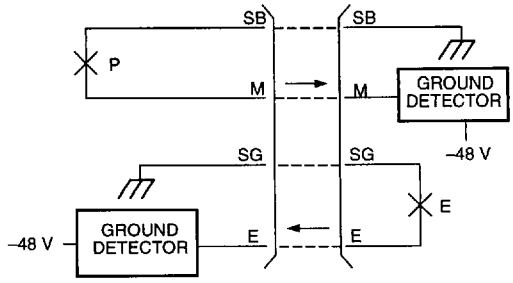

Figure 32. Type V Interface

0050026 0019760 84T

Outline Diagrams

20-Pin Plastic DIP (LH1263AE)

Dimensions are in inches and (millimeters).

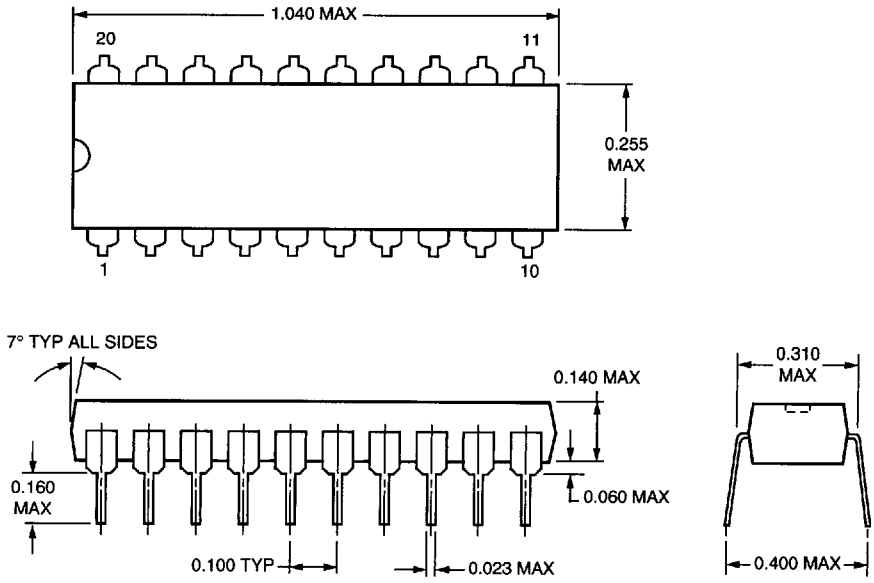

0050026 0019761 786

Packaging and Ordering Information

Throughout this section the following abbreviations are used:

DIP — Dual in-line package; SOG — Small-outline gull wing; SOJ — Small-outline J-lead; SONB — Small-outline narrow body; PLCC — Plastic leaded chip carrier.

Device Code	Package Type	Temperature
ATTL7551AP	44-Pin PLCC	–40 °C to +85 °C
ATTL7551AF	24-Pin DIP	–40 °C to +85 °C
ATTL7554AP	44-Pin PLCC	–40 °C to +85 °C
ATTL7556AAU	32-Pin PLCC	–40 °C to +85 °C
ATTL7557AAU		
ATTL7561AP	44-Pin PLCC	–40 °C to +85 °C
ATTL7564AP		
ATTL7581AC/BC	16-Pin DIP	–40 °C to +85 °C
ATTL7581AAE/BAE	16-Pin Plastic SOG	–40 °C to +85 °C
ATTL7582AE/BE	16-Pin Plastic DIP	–40 °C to +85 °C
ATTL7582AAE/BAE	16-Pin Plastic SOG	–40 °C to +85 °C
ATTL7583AF/BF	24-Pin Plastic DIP (600 mil)	–40 °C to +85 °C
ATTL7583ACG/BCG	24-Pin Plastic DIP (300 mil)	–40 °C to +85 °C
ATTL7583AAJ/BAJ	28-Pin Plastic SOG	–40 °C to +85 °C
ATTL7590AAF	14-Pin	–40 °C to +85 °C
ATTL7591AB	8-Pin, DIP	–40 °C to +85 °C
ATTL7591AS	8-Pin, SONB	–40 °C to +85 °C
LB1011AB	8-Pin, DIP	–20 °C to +70 °C
LB1013AD	18-Pin, DIP	–25 °C to +85 °C
LB1060AB	8-Pin, DIP	–40 °C to +65 °C
LB1201AB	8-Pin, DIP	–40 °C to +85 °C
LB1201AS	8-Pin, SONB	–40 °C to +85 °C
LB1208AAJ	28-pin SOG	–40 °C to +85 °C
LB1276AP	44-Pin PLCC	–40 °C to +85 °C
LB1276AF	24-Pin DIP	–40 °C to +85 °C
LB1356AF	24-Pin DIP	–40 °C to +85 °C
LH1263AR	20-Pin Plastic DIP	–40 °C to +85 °C
LH1571AB	8-pin Plastic DIP	–40 °C to +85 °C
LH1571AAC	8-pin SOG	–40 °C to +85 °C
T - 7503 - - - EL	20-Pin, SOJ	–40 °C to +85 °C
T - 7503 - - 1EC	20-Pin, SOJ	0 °C to 70 °C
T - 7504 - - - PL	28-Pin, DIP	–40 °C to +85 °C
T - 7504 - - - ML	28-Pin, PLCC	–40 °C to +85 °C
T - 5504 - - - PL	28-Pin, DIP	–40 °C to +85 °C
T - 5504 - - - ML	28-Pin, PLCC	–40 °C to +85 °C
T - 7513B - - EE	20-Pin, SOJ	–40 °C to +85 °C
T - 7513B - - PE	20-Pin, DIP	–40 °C to +85 °C
T - 7517A - - EE	16-Pin, DIP	–40 °C to +85 °C
T - 7517A - - PE	16-Pin, SOJ	–40 °C to +85 °C
T - 7548 - - - ME2	28-Pin, PLCC	0 °C to 85 °C
T - 7570 - - - ML2	28-Pin, PLCC	–40 °C to +85 °C

О компании

ООО "ТрейдЭлектроникс" - это оперативные поставки широкого спектра электронных компонентов отечественного и импортного производства напрямую от производителей и с крупнейших мировых складов. Реализуемая нашей компанией продукция насчитывает более полумиллиона наименований.

Благодаря этому наша компания предлагает к поставке практически не ограниченный ассортимент компонентов как оптовыми, мелкооптовыми партиями, так и в розницу.

Наличие собственной эффективной системы логистики обеспечивает надежную поставку продукции по конкурентным ценам в точно указанные сроки.

Срок поставки со стоков в **Европе и Америке – от 3 до 14 дней.**

Срок поставки из **Азии – от 10 дней.**

Благодаря развитой сети поставщиков, помогаем в поиске и приобретении экзотичных или снятых с производства компонентов.

Предоставляем спец цены на элементы для создания инженерных сэмплов.

Упорный труд, качественный результат дают нам право быть уверенными в себе и надежными для наших клиентов.

Наша компания это:

- Гарантия качества поставляемой продукции
- Широкий ассортимент
- Минимальные сроки поставок
- Техническая поддержка
- Подбор комплектации
- Индивидуальный подход
- Гибкое ценообразование

Наша организация особенно сильна в поставках модулей, микросхем, пассивных компонентов, ксайленсах (XC), EPF, EPM и силовой электроники.

Большой выбор предлагаемой продукции, различные виды оплаты и доставки, позволят Вам сэкономить время и получить максимум выгоды от сотрудничества с нами!

Trade Electronics.ru

гарантия бесперебойности производства и качества выпускаемой продукции

Перечень производителей, продукцию которых мы поставляем на российский рынок

AMD
ANALOG DEVICES
BOURNS
Coilcraft
élantec Semiconductor, Inc.
HARRIS
Infineon
JRC
MICREL
MOTOROLA
nichicon
PHILIPS
ROHM
SGS-THOMSON
Sipex
TAIYO YUDEN
TOKO
ZILOG
Winbond
Allegro
ATMEL
BURR - BROWN
EXAR
HITACHI
intel
Lattice
muRata
OKI
QUALCOMM
SAMSUNG
SHARP
SONY
TDK
TOSHIBA
KYOCERA
ALTERA
AVX
CITILYST
CYPRESS
FAIRCHILD SEMICONDUCTOR
HOLTEK
International IOR Rectifier
LINEAR TECHNOLOGY
MITSUBISHI
National Semiconductor
ON Semiconductor
REALTEK
SANYO
SHINDENGEN
SGS
TECCOR
TUNDRA
XILINX
Amphenol
Bay Linear
CIRRUS LOGIC
DALLAS
FUJITSU
IDT
intersil
MAXIM
molex
NEC
Panasonic
RENESAS
SII
SIEMENS
ST
Texas Instruments
VISHAY
ZETEX SEMICONDUCTORS

Trade Electronics.ru

гарантия бесперебойности производства и качества выпускаемой продукции

С удовольствием будем прорабатывать для Вас поставки всех необходимых компонентов по текущим запросам для скорейшего выявления групп элементов, по которым сотрудничество именно с нашей компанией будет для Вас максимально выгодным!

С уважением,

Менеджер отдела продаж ООО

«Трейд Электроникс»

Шишлаков Евгений

8 (495)668-30-28 доб 169

manager28@tradeelectronics.ru

http://www.tradeelectronics.ru/