JST

Crimp

2.5mm
(.098") pitch

# EH CONNECTOR

Radial Tape

*Disconnectable Crimp style connectors*

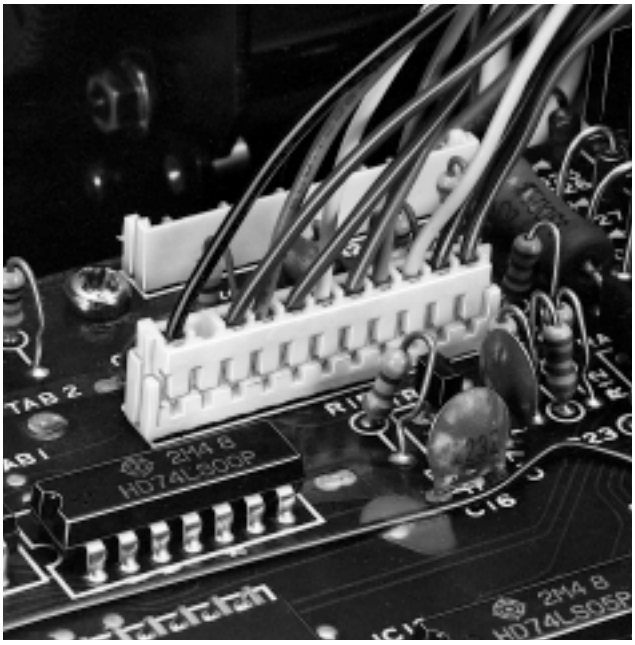

***This, the thinnest, 2.5mm (.098") pitch connector, is 8.1mm (.319") in height after mounting and 3.8mm (.150") in width. It is designed to meet the demand for the high-density connection of internal wires to printed circuit boards. It is compact, highly reliable and low in cost.***

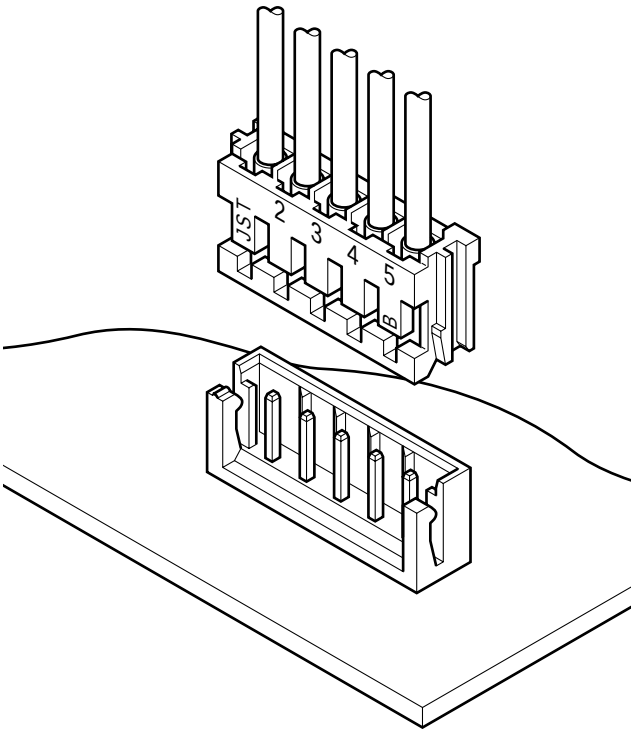


## Features

### • Compact and slim

This connector is designed to be compact and unusually thin. It measures only 8.1mm (.319") high after mounting and is just 3.8mm (.150") wide.

### • Highly reliable contact

The contact has long dimples near the center that ensure continuity of low voltage and low current circuits at all times, even under conditions of vibration and abusive prying.

### • Polarizing guides

The header and housing have guides to prevent improper mating.

### • Whisker prevention

The contact material is treated with a reflow process, and the square post is copper-undercoated and tin/lead-plated for whisker prevention.

### • Easy and effective crimping

Although the contact is compact, it has a long wire strip length, 2.6±0.4mm (.102"±.016"). This long length is very useful for automatic crimping and when crimping shielded wires.

## Specifications

- Current rating: 3A AC, DC (AWG#22)
- Voltage rating: 250V AC, DC
- Temperature range: -25˚C to +85˚C (including temperature rise in applying electrical current)
- Contact resistance: Initial value/10m Ω max. After environmental testing/20m Ω max.
- Insulation resistance: 1,000M Ω min.
- Withstanding voltage: 800V AC/minute
- Applicable wire: AWG #32 to #22
- Applicable PC board thickness: 0.8 to 1.6mm(.031" to .063")

* Contact JST for details.

## Standards

Recognized E60389

Certified LR20812

R75089

## Contact

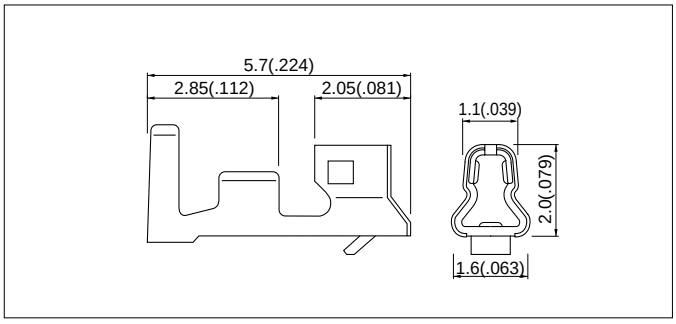


| Model No. | Applicable wire | | | Q'ty / reel |
|---|---|---|---|---|
| | mm² | AWG # | Insulation O.D. mm(in.) | |
| **SEH-001T-P0.6** | 0.05 to 0.3 | 30 to 22 | 1.0 to 1.9(.039 to .075) | 10,000 |
| **SEH-003T-P0.6L** | 0.032 to 0.08 | 32 to 28 | 0.5 to 1.1(.020 to .043) | |

| Material and Finish |
|---|
| Phosphor bronze, tin-plated |

*Note: 1. Contact JST for gold-plated contacts.*
*2. SEH-003T-P0.6L is not TÜV approved.*

## Housing

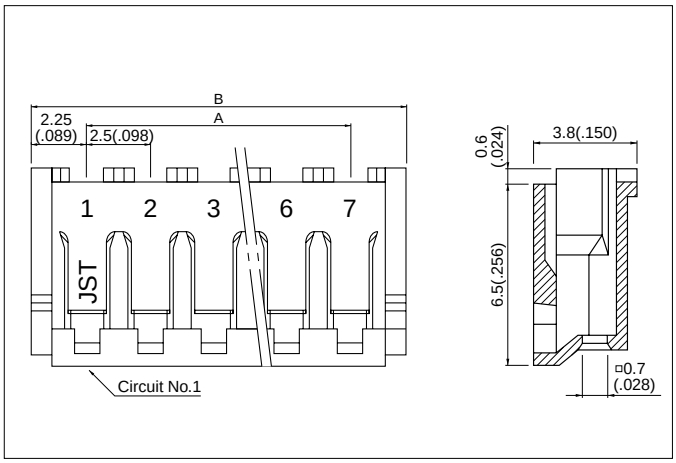


| Cir-cuits | Model No. | Dimensions mm(in.) | | Q'ty / bag |
|---|---|---|---|---|
| | | A | B | |
| 2 | **EHR- 2** | 2.5( .098) | 7.0( .276) | 1,000 |
| 3 | **EHR- 3** | 5.0( .197) | 9.5( .374) | 1,000 |
| 4 | **EHR- 4** | 7.5( .295) | 12.0( .472) | 1,000 |
| 5 | **EHR- 5** | 10.0( .394) | 14.5( .571) | 1,000 |
| 6 | **EHR- 6** | 12.5( .492) | 17.0( .669) | 1,000 |
| 7 | **EHR- 7** | 15.0( .591) | 19.5( .768) | 1,000 |
| 8 | **EHR- 8** | 17.5( .689) | 22.0( .866) | 1,000 |
| 9 | **EHR- 9** | 20.0( .787) | 24.5( .965) | 1,000 |
| 10 | **EHR-10** | 22.5( .866) | 27.0(1.063) | 1,000 |
| 11 | **EHR-11** | 25.0( .984) | 29.5(1.161) | 1,000 |
| 12 | **EHR-12** | 27.5(1.083) | 32.0(1.260) | 1,000 |
| 13 | **EHR-13** | 30.0(1.181) | 34.5(1.358) | 1,000 |
| 14 | **EHR-14** | 32.5(1.280) | 37.0(1.457) | 1,000 |
| 15 | **EHR-15** | 35.0(1.378) | 39.5(1.555) | 1,000 |

| Material |
|---|
| Nylon 66, UL94V-0, natural (white) |

*<For reference> As the color identification,*
*the following alphabet shall be put in the underlined part.*
*For availability, delivery and minimum order quantity, contact JST.*

*ex.* EHR-2-oo
*(blank)…natural (white)*
*K…black R…red TR…tomato red E…blue Y…yellow*
*L…lemon yellow M…green O…orange N…brown PL…purple*
*PK…pink H…gray LE…light blue FY…vivid yellow*

## Shrouded header

The shrouded headers are interchangeable with those of the HR crimp style and insulation displacement connectors.

Top entry type

(2 circuits)

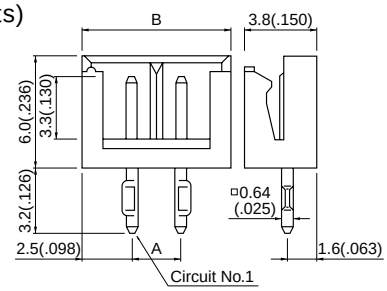


(3 to 15 circuits)

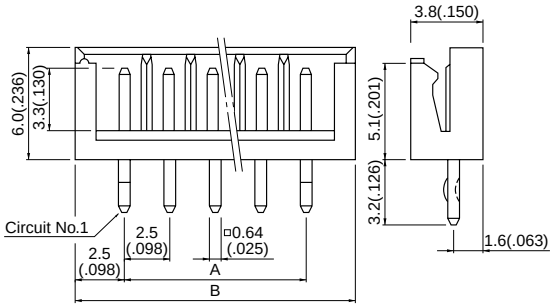


Side entry type

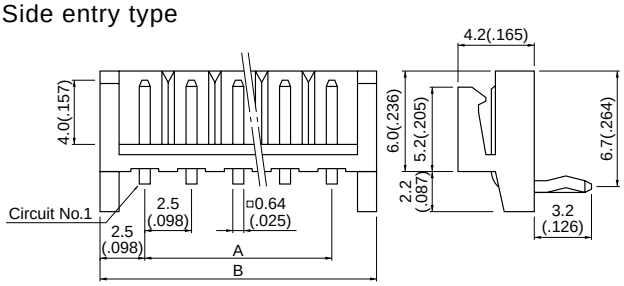


| Circuits | Model No. | | Dimensions mm.(in) | | Q'ty / box | |
|---|---|---|---|---|---|---|
| | Top entry type | Side entry type | A | B | Top entry type | Side entry type |
| 2 | **B 2B-EH-A** | **S 2B-EH** | 2.5( .098) | 7.5( .295) | 1,000 | 1,000 |
| 3 | **B 3B-EH-A** | **S 3B-EH** | 5.0( .197) | 10.0( .394) | 1,000 | 1,000 |
| 4 | **B 4B-EH-A** | **S 4B-EH** | 7.5( .295) | 12.5( .492) | 1,000 | 1,000 |
| 5 | **B 5B-EH-A** | **S 5B-EH** | 10.0( .394) | 15.0( .591) | 1,000 | 1,000 |
| 6 | **B 6B-EH-A** | **S 6B-EH** | 12.5( .492) | 17.5( .689) | 1,000 | 500 |
| 7 | **B 7B-EH-A** | **S 7B-EH** | 15.0( .591) | 20.0( .787) | 1,000 | 500 |
| 8 | **B 8B-EH-A** | **S 8B-EH** | 17.5( .689) | 22.5( .886) | 500 | 500 |
| 9 | **B 9B-EH-A** | **S 9B-EH** | 20.0( .787) | 25.0( .984) | 500 | 500 |
| 10 | **B10B-EH-A** | **S10B-EH** | 22.5( .866) | 27.5(1.083) | 500 | 500 |
| 11 | **B11B-EH-A** | **S11B-EH** | 25.0( .984) | 30.0(1.181) | 500 | 250 |
| 12 | **B12B-EH-A** | **S12B-EH** | 27.5(1.083) | 32.5(1.280) | 500 | 250 |
| 13 | **B13B-EH-A** | **S13B-EH** | 30.0(1.181) | 35.0(1.378) | 250 | 250 |
| 14 | **B14B-EH-A** | **S14B-EH** | 32.5(1.280) | 37.5(1.476) | 250 | 250 |
| 15 | **B15B-EH-A** | **S15B-EH** | 35.0(1.378) | 40.0(1.575) | 250 | 250 |

| Material and Finish |
|---|
| Post: Brass, copper-undercoated, tin/lead plated<br>Wafer: Nylon 66, UL94V-0, natural (white) |

*Note:*
*1. Also available and identified as model BxxB-EH is a top entry type having a post extension length of 4.0mm(.157")*
*2. Top entry type headers are not TÜV approved.*

*<For reference> As the color identification, the following alphabet shall be put in the underlined part. For availability, delivery and minimum order quantity, contact JST.*

*<Top entry type>*

*ex.* B2B-EH-A-oo
*(blank)…natural (white)*
*K…black R…red E…blue Y…yellow M…green*

*<Side entry type>*

*ex.* S2B-EH-oo
*(blank)…natural (white)*
*K…black R…red TR…tomato red E…blue Y…yellow*
*L…lemon yellow M…green O…orange N…brown P…purple*
*PK…pink H…gray LE…light blue FY…vivid yellow*

## PC board layout (viewed from soldering side) and Assembly layout

Top entry type

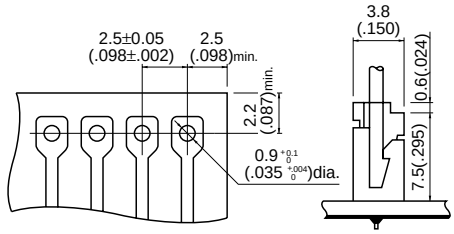


Side entry type

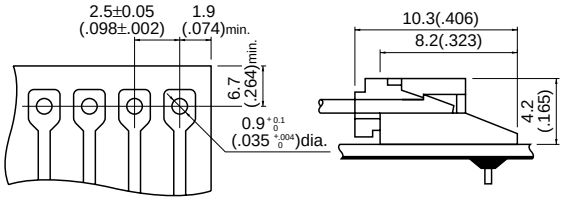


*Note:*
*1. Tolerances are non-cumulative: ±0.05mm(±.002" ) for all centers.*
*2. Hole dimension differ according to the kind of PC board and piercing method. If PC boards made of hard material such as FR-4 are used, the hole dimensions should be larger. The dimensions above should serve as a guideline. Contact JST for details.*

## *Shrouded header on radial-tape*

<Taping specifications conform to EIAJ-RC-1008B and JIS C0805.>
•The shrouded headers are interchangeable with those of the HR crimp style and insulation displacement connectors .
*•Shrouded headers on radial-tape are not TÜV approved.*

TS type
(2 circuits)

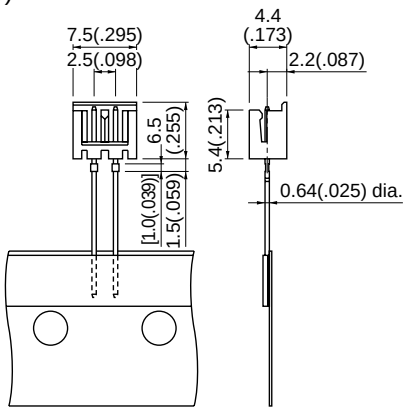


(3 to 8 circuits)

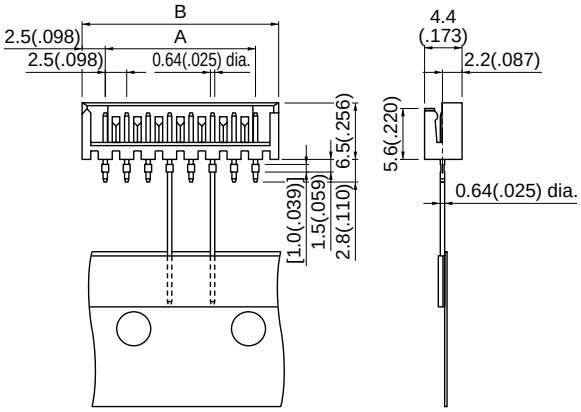


| Cir-cuits | Model No. | Dimensions mm(in.) | | Q'ty / box |
|---|---|---|---|---|
| | | A | B | |
| 2 | **B2B-EH-TS** | – | – | 1,400 |
| 3 | **B3B-EH-TS** | 5.0(.197) | 10.0(.394) | 1,400 |
| 4 | **B4B-EH-TS** | 7.5(.295) | 12.5(.492) | 700 |
| 5 | **B5B-EH-TS** | 10.0(.394) | 15.0(.591) | 700 |
| 6 | **B6B-EH-TS** | 12.5(.492) | 17.5(.689) | 700 |
| 7 | **B7B-EH-TS** | 15.0(.591) | 20.0(.787) | 700 |
| 8 | **B8B-EH-TS** | 17.5(.689) | 22.5(.886) | 700 |

| Material and Finish |
|---|
| Pin: Brass, copper-undercoated, tin/lead-plated<br>Wafer: Nylon 66, UL94V-0, natural (white) |

*<For reference> As the color identification,*
*the following alphabet shall be put in the underlined part.*
*For availability, delivery and minimum order quantity, contact JST.*

*ex.* B2B-EH-TS-oo
*(blank)…natural (white)*
*K…black R…red E…blue Y…yellow M…green N…brown*

TV4 type

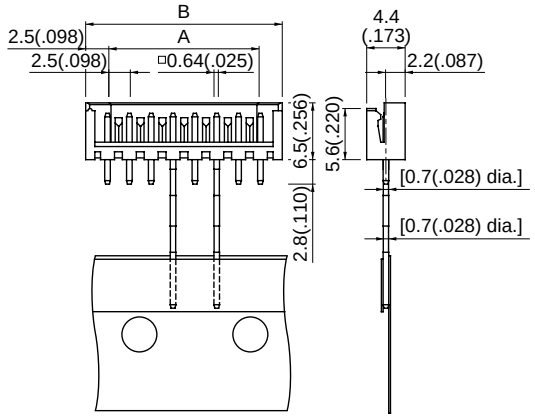


| Cir-cuits | Model No. | Dimensions mm(in.) | | Q'ty / box |
|---|---|---|---|---|
| | | A | B | |
| 3 | **B3B-EH-TV4** | 5.0(.197) | 10.0(.394) | 1,400 |
| 4 | **B4B-EH-TV4** | 7.5(.295) | 12.5(.492) | 700 |
| 5 | **B5B-EH-TV4** | 10.0(.394) | 15.0(.591) | 700 |
| 6 | **B6B-EH-TV4** | 12.5(.492) | 17.5(.689) | 700 |
| 7 | **B7B-EH-TV4** | 15.0(.591) | 20.0(.787) | 700 |
| 8 | **B8B-EH-TV4** | 17.5(.689) | 22.5(.886) | 700 |

| Material and Finish |
|---|
| Post: Brass, copper-undercoated, tin/lead-plated<br>Wafer: Nylon 66, UL94V-0, natural (white) |

## Taping specifications

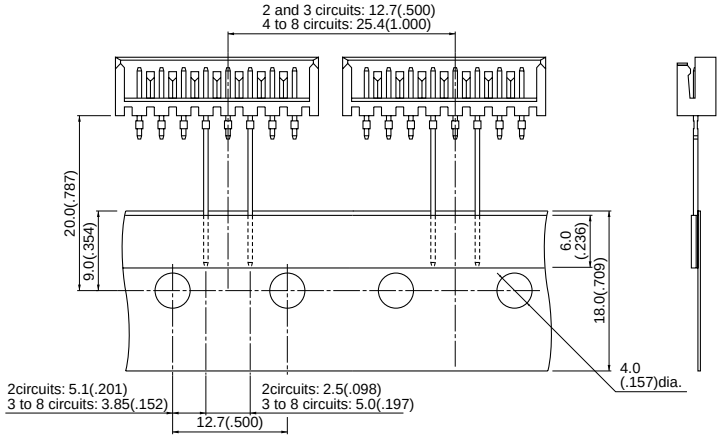


*Note: Conforms to JIS C0825.*

## Packaging specifications

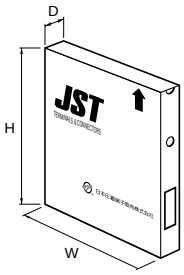


| | |
|---|---|
| Package type | Flat pack (zigzag folded) |
| Distance between folds | 24 indexing holes per fold (304.8mm/12") |
| Box size | (316x45x330mm)12.4"(W)x1.8"(D) x13.0"(H) |
| Distance between the end of the tape and the first connector´s center line (either end) | 19.05mm(.750") |

*Distance between the end of the tape and the first connector's center line (either end)*

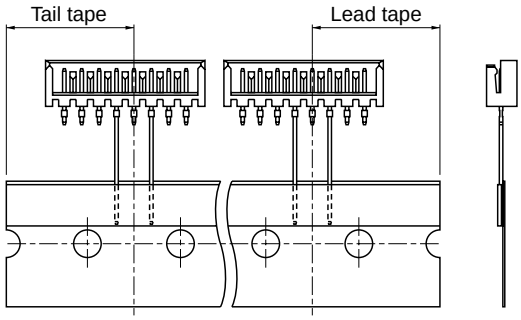


## PC board layout (viewed from soldering side) and Assembly layout

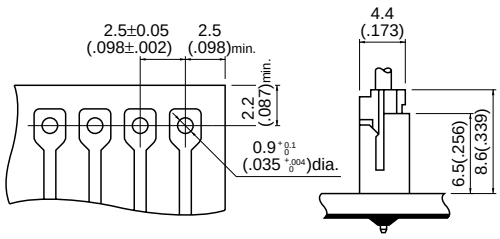


*Note:*
*1. Tolerances are non-cumulative: ±0.05mm(±.002" ) for all centers.*
*2. Hole dimension differ according to the kind of PC board and piercing method. If PC boards made of hard material such as FR-4 are used, the hole dimensions should be larger. The dimensions above should serve as a guideline. Contact JST for details.*

## *Applicator for the semi-automatic press AP-K2N*

| Contact | Crimp applicator MKS-L(-10) | | Compact crimp applicator MKS-LS | | Strip-crimp applicator MKS-SC |
|---|---|---|---|---|---|
| | with safety cover | without safety cover | with safety cover | without safety cover | with safety cover |
| SEH-001T-P0.6 | APLMK SEH001-06 | APLNC SEH001-06 | APLMKLS SEH001-06 | APLLSNC SEH001-06 | APLSC SEH001-06 |
| SEH-003T-P0.6L | APLMK SEH003-06 | APLNC SEH003-06 | – | – | APLSC SEH003-06 |

## О компании

ООО "ТрейдЭлектроникс" - это оперативные поставки широкого спектра электронных компонентов отечественного и импортного производства напрямую от производителей и с крупнейших мировых складов. Реализуемая нашей компанией продукция насчитывает более полумиллиона наименований.

Благодаря этому наша компания предлагает к поставке практически не ограниченный ассортимент компонентов как оптовыми, мелкооптовыми партиями, так и в розницу.

Наличие собственной эффективной системы логистики обеспечивает надежную поставку продукции по конкурентным ценам в точно указанные сроки.

Срок поставки со стоков в **Европе и Америке – от 3 до 14 дней.**

Срок поставки из **Азии – от 10 дней.**

Благодаря развитой сети поставщиков, помогаем в поиске и приобретении экзотичных или снятых с производства компонентов.

Предоставляем спец цены на элементы для создания инженерных сэмплов.

**Упорный труд, качественный результат дают нам право быть уверенными в себе и надежными для наших клиентов.**

## Наша компания это:

- Гарантия качества поставляемой продукции
- Широкий ассортимент
- Минимальные сроки поставок
- Техническая поддержка
- Подбор комплектации
- Индивидуальный подход
- Гибкое ценообразование

Наша организация особенно сильна в поставках модулей, микросхем, пассивных компонентов, ксайленсах (XC), EPF, EPM и силовой электроники.

Большой выбор предлагаемой продукции, различные виды оплаты и доставки, позволят Вам сэкономить время и получить максимум выгоды от сотрудничества с нами!

Trade Electronics.ru

гарантия бесперебойности производства и качества выпускаемой продукции

**Перечень производителей, продукцию которых мы поставляем на российский рынок**

AMD
ANALOG DEVICES
BOURNS
Coilcraft
élantec Semiconductor, Inc.
HARRIS
Infineon
JRC
MICREL
MOTOROLA
nichicon
PHILIPS
ROHM
SGS-THOMSON
Sipex
TAIYO YUDEN
TOKO
ZILOG
Winbond
Allegro
ATMEL
BURR - BROWN
EXAR
HITACHI
intel
Lattice
muRata
OKI
QUALCOMM
SAMSUNG
SHARP
SONY
TDK
TOSHIBA
KYOCERA
ALTERA
AVX
CITILYST
CYPRESS
FAIRCHILD SEMICONDUCTOR
HOLTEK
International IOR Rectifier
LINEAR TECHNOLOGY
MITSUBISHI
National Semiconductor
ON Semiconductor
REALTEK
SANYO
SHINDENGEN
SGS
TECCOR
TUNDRA
XILINX
Amphenol
Bay Linear
CIRRUS LOGIC
DALLAS
FUJITSU
IDT
intersil
MAXIM
molex
NEC
Panasonic
RENESAS
SII
SIEMENS
ST
Texas Instruments
VISHAY
ZETEX SEMICONDUCTORS

Trade Electronics.ru

гарантия бесперебойности производства и качества выпускаемой продукции

С удовольствием будем прорабатывать для Вас поставки всех необходимых компонентов по текущим запросам для скорейшего выявления групп элементов, по которым сотрудничество именно с нашей компанией будет для Вас максимально выгодным!

С уважением,

Менеджер отдела продаж ООО

«Трейд Электроникс»

Шишлаков Евгений

8 (495)668-30-28 доб 169

manager28@tradeelectronics.ru

http://www.tradeelectronics.ru/