TNY274-280

TinySwitch®-III Family

Energy Efficient, Off-Line Switcher with Enhanced Flexibility and Extended Power Range

Product Highlights

Lowest System Cost with Enhanced Flexibility

- Simple ON/OFF control, no loop compensation needed
- Selectable current limit through BP/M capacitor value
  - Higher current limit extends peak power or, in open frame applications, maximum continuous power
  - Lower current limit improves efficiency in enclosed adapters/chargers
  - Allows optimum *TinySwitch-III* choice by swapping devices with no other circuit redesign
- Tight I^2f parameter tolerance reduces system cost
  - Maximizes MOSFET and magnetics power delivery
  - Minimizes max overload power, reducing cost of transformer, primary clamp & secondary components
- ON-time extension – extends low line regulation range/ hold-up time to reduce input bulk capacitance
- Self-biased: no bias winding or bias components
- Frequency jittering reduces EMI filter costs
- Pin-out simplifies heatsinking to the PCB
- SOURCE pins are electrically quiet for low EMI

Enhanced Safety and Reliability Features

- Accurate hysteretic thermal shutdown protection with automatic recovery eliminates need for manual reset
- Improved auto-restart delivers <3% of maximum power in short circuit and open loop fault conditions
- Output overvoltage shutdown with optional Zener
- Line under-voltage detect threshold set using a single optional resistor
- Very low component count enhances reliability and enables single-sided printed circuit board layout
- High bandwidth provides fast turn on with no overshoot and excellent transient load response
- Extended creepage between DRAIN and all other pins improves field reliability

EcoSmart® – Extremely Energy Efficient

- Easily meets all global energy efficiency regulations
- No-load <150 mW at 265 VAC without bias winding, <50 mW with bias winding
- ON/OFF control provides constant efficiency down to very light loads – ideal for mandatory CEC regulations and 1 W PC standby requirements

Applications

- Chargers/adapters for cell/cordless phones, PDAs, digital cameras, MP3/portable audio, shavers, etc.
- PC Standby and other auxiliary supplies
- DVD/PVR and other low power set top decoders
- Supplies for appliances, industrial systems, metering, etc.

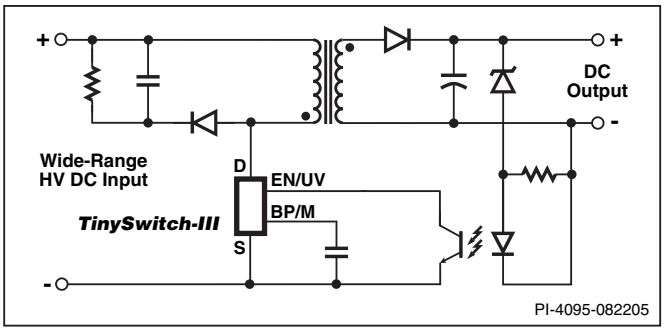

Figure 1. Typical Standby Application.

OUTPUT POWER TABLE				
PRODUCT[3]	230 VAC ±15%		85-265 VAC	
	Adapter[1]	Peak or Open Frame[2]	Adapter[1]	Peak or Open Frame[2]
TNY274 P or G	6 W	11 W	5 W	8.5 W
TNY275 P or G	8.5 W	15 W	6 W	11.5 W
TNY276 P or G	10 W	19 W	7 W	15 W
TNY277 P or G	13 W	23.5 W	8 W	18 W
TNY278 P or G	16 W	28 W	10 W	21.5 W
TNY279 P or G	18 W	32 W	12 W	25 W
TNY280 P or G	20 W	36.5 W	14 W	28.5 W

Table 1. Notes: **1.** Minimum continuous power in a typical non-ventilated enclosed adapter measured at 50 °C ambient. Use of an external heatsink will increase power capability **2.** Minimum peak power capability in any design or minimum continuous power in an open frame design (see Key Application Considerations). **3.** Packages: P: DIP-8C, G: SMD-8C. See Part Ordering Information.

Description

TinySwitch-III incorporates a 700 V power MOSFET, oscillator, high voltage switched current source, current limit (user selectable) and thermal shutdown circuitry. The IC family uses an ON/OFF control scheme and offers a design flexible solution with a low system cost and extended power capability.

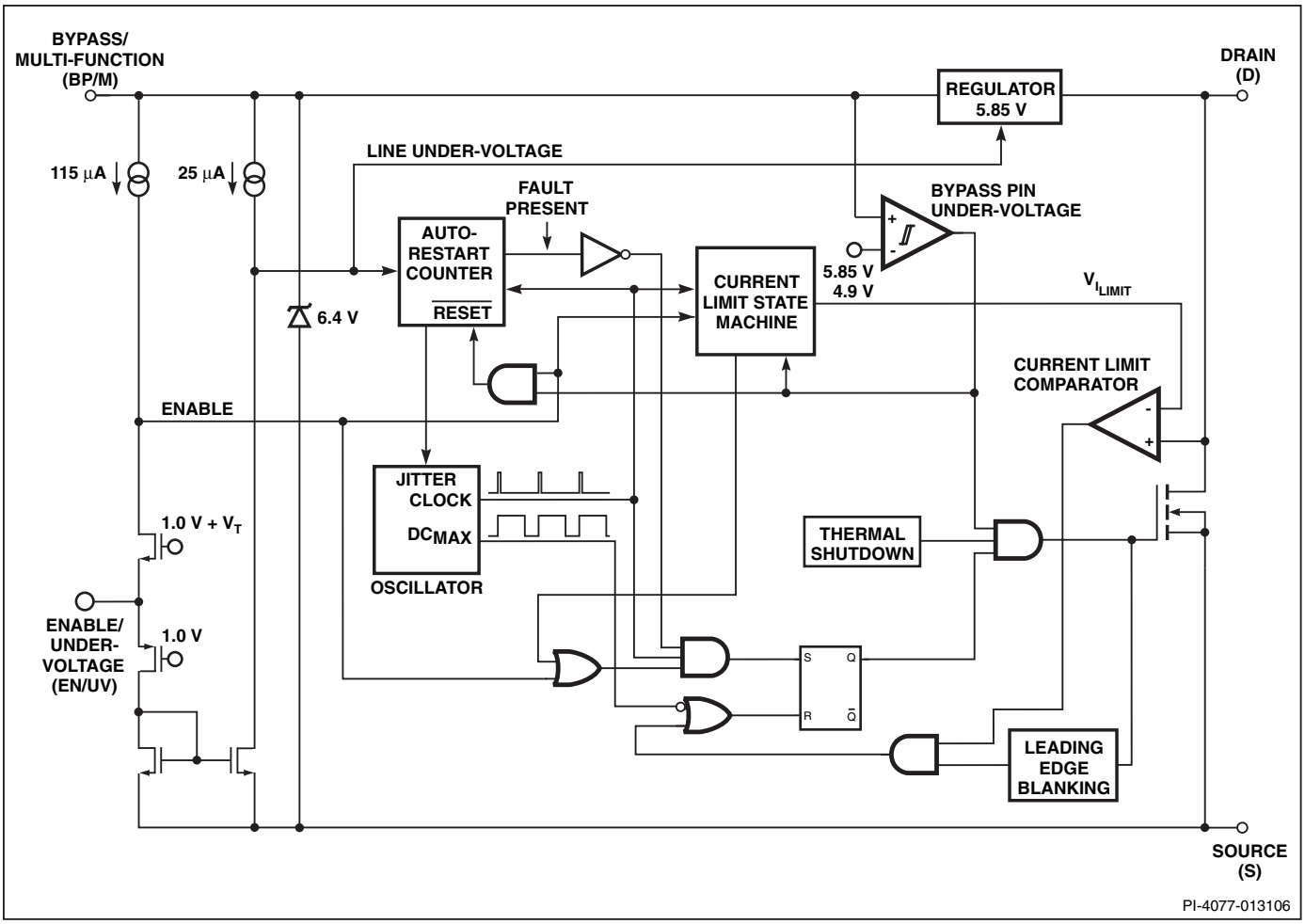

Figure 2. Functional Block Diagram.

Pin Functional Description

DRAIN (D) Pin:
This pin is the power MOSFET drain connection. It provides internal operating current for both start-up and steady-state operation.

BYPASS/MULTI-FUNCTION (BP/M) Pin:
This pin has multiple functions:

1. It is the connection point for an external bypass capacitor for the internally generated 5.85 V supply.
2. It is a mode selector for the current limit value, depending on the value of the capacitance added. Use of a 0.1 µF capacitor results in the standard current limit value. Use of a 1 µF capacitor results in the current limit being reduced to that of the next smaller device size. Use of a 10 µF capacitor results in the current limit being increased to that of the next larger device size for TNY275-280.
3. It provides a shutdown function. When the current into the bypass pin exceeds 5.5 mA, the device latches off until the BP/M voltage drops below 4.9 V, during a power down. This can be used to provide an output overvoltage function with a Zener connected from the BP/M pin to a bias winding supply.

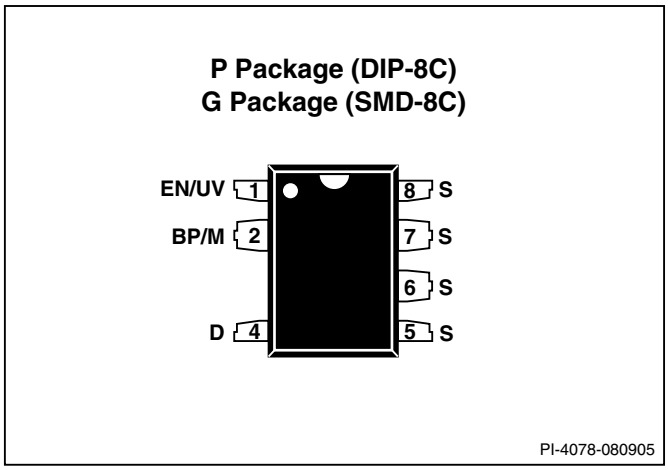

Figure 3. Pin Configuration.

ENABLE/UNDER-VOLTAGE (EN/UV) Pin:
This pin has dual functions: enable input and line under-voltage sense. During normal operation, switching of the power

MOSFET is controlled by this pin. MOSFET switching is terminated when a current greater than a threshold current is drawn from this pin. Switching resumes when the current being pulled from the pin drops to less than a threshold current. A modulation of the threshold current reduces group pulsing. The threshold current is between 60 µA and 115 µA.

The EN/UV pin also senses line under-voltage conditions through an external resistor connected to the DC line voltage. If there is no external resistor connected to this pin, *TinySwitch-III* detects its absence and disables the line under-voltage function.

SOURCE (S) Pin:
This pin is internally connected to the output MOSFET source for high voltage power return and control circuit common.

TinySwitch-III Functional Description

TinySwitch-III combines a high voltage power MOSFET switch with a power supply controller in one device. Unlike conventional PWM (pulse width modulator) controllers, it uses a simple ON/OFF control to regulate the output voltage.

The controller consists of an oscillator, enable circuit (sense and logic), current limit state machine, 5.85 V regulator, BYPASS/MULTI-FUNCTION pin under-voltage, overvoltage circuit, and current limit selection circuitry, over- temperature protection, current limit circuit, leading edge blanking, and a 700 V power MOSFET. *TinySwitch-III* incorporates additional circuitry for line under-voltage sense, auto-restart, adaptive switching cycle on-time extension, and frequency jitter. Figure 2 shows the functional block diagram with the most important features.

Oscillator
The typical oscillator frequency is internally set to an average of 132 kHz. Two signals are generated from the oscillator: the maximum duty cycle signal (DC_{MAX}) and the clock signal that indicates the beginning of each cycle.

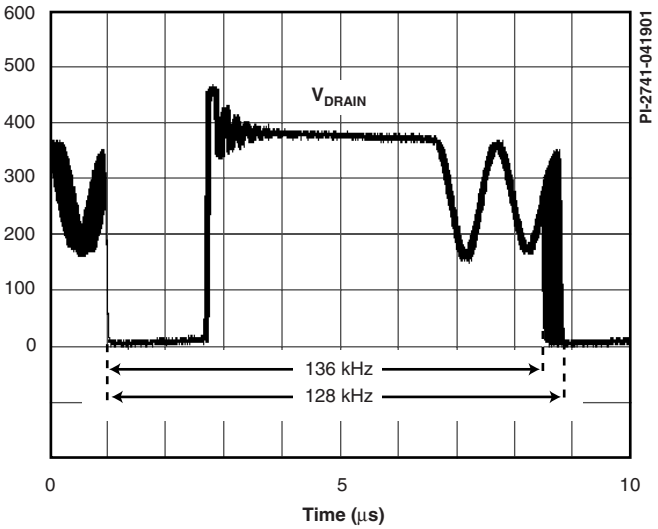

Figure 4. Frequency Jitter.

The oscillator incorporates circuitry that introduces a small amount of frequency jitter, typically 8 kHz peak-to-peak, to minimize EMI emission. The modulation rate of the frequency jitter is set to 1 kHz to optimize EMI reduction for both average and quasi-peak emissions. The frequency jitter should be measured with the oscilloscope triggered at the falling edge of the DRAIN waveform. The waveform in Figure 4 illustrates the frequency jitter.

Enable Input and Current Limit State Machine
The enable input circuit at the EN/UV pin consists of a low impedance source follower output set at 1.2 V. The current through the source follower is limited to 115 µA. When the current out of this pin exceeds the threshold current, a low logic level (disable) is generated at the output of the enable circuit, until the current out of this pin is reduced to less than the threshold current. This enable circuit output is sampled at the beginning of each cycle on the rising edge of the clock signal. If high, the power MOSFET is turned on for that cycle (enabled). If low, the power MOSFET remains off (disabled). Since the sampling is done only at the beginning of each cycle, subsequent changes in the EN/UV pin voltage or current during the remainder of the cycle are ignored.

The current limit state machine reduces the current limit by discrete amounts at light loads when *TinySwitch-III* is likely to switch in the audible frequency range. The lower current limit raises the effective switching frequency above the audio range and reduces the transformer flux density, including the associated audible noise. The state machine monitors the sequence of enable events to determine the load condition and adjusts the current limit level accordingly in discrete amounts.

Under most operating conditions (except when close to no-load), the low impedance of the source follower keeps the voltage on the EN/UV pin from going much below 1.2 V in the disabled state. This improves the response time of the optocoupler that is usually connected to this pin.

5.85 V Regulator and 6.4 V Shunt Voltage Clamp
The 5.85 V regulator charges the bypass capacitor connected to the BYPASS pin to 5.85 V by drawing a current from the voltage on the DRAIN pin whenever the MOSFET is off. The BYPASS/MULTI-FUNCTION pin is the internal supply voltage node. When the MOSFET is on, the device operates from the energy stored in the bypass capacitor. Extremely low power consumption of the internal circuitry allows *TinySwitch-III* to operate continuously from current it takes from the DRAIN pin. A bypass capacitor value of 0.1 µF is sufficient for both high frequency decoupling and energy storage.

In addition, there is a 6.4 V shunt regulator clamping the BYPASS/MULTI-FUNCTION pin at 6.4 V when current is provided to the BYPASS/MULTI-FUNCTION pin through an external resistor. This facilitates powering of *TinySwitch-III* externally through a bias winding to decrease the no-load consumption to well below 50 mW.

BYPASS/MULTI-FUNCTION Pin Under-Voltage
The BYPASS/MULTI-FUNCTION pin under-voltage circuitry disables the power MOSFET when the BYPASS/MULTI-FUNCTION pin voltage drops below 4.9 V in steady state operation. Once the BYPASS/MULTI-FUNCTION pin voltage drops below 4.9 V in steady state operation, it must rise back to 5.85 V to enable (turn-on) the power MOSFET.

Over Temperature Protection
The thermal shutdown circuitry senses the die temperature. The threshold is typically set at 142 °C with 75 °C hysteresis. When the die temperature rises above this threshold the power MOSFET is disabled and remains disabled until the die temperature falls by 75 °C, at which point it is re-enabled. A large hysteresis of 75 °C (typical) is provided to prevent overheating of the PC board due to a continuous fault condition.

Current Limit
The current limit circuit senses the current in the power MOSFET. When this current exceeds the internal threshold (I_{LIMIT}), the power MOSFET is turned off for the remainder of that cycle. The current limit state machine reduces the current limit threshold by discrete amounts under medium and light loads.

The leading edge blanking circuit inhibits the current limit comparator for a short time (t_{LEB}) after the power MOSFET is turned on. This leading edge blanking time has been set so that current spikes caused by capacitance and secondary-side rectifier reverse recovery time will not cause premature termination of the switching pulse.

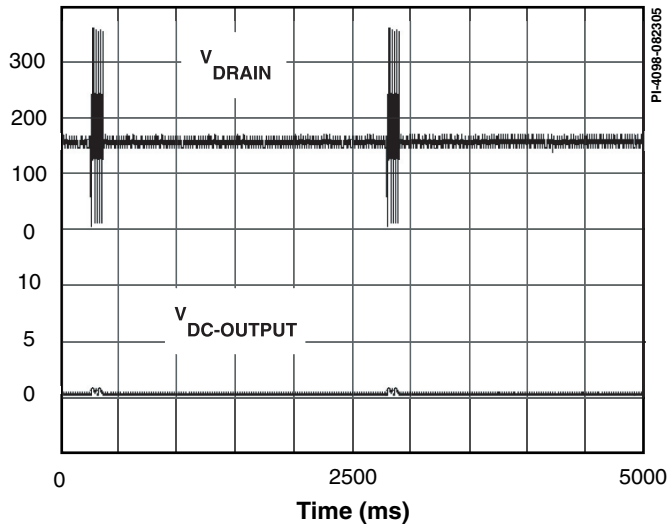

Figure 5. Auto-Restart Operation.

Auto-Restart
In the event of a fault condition such as output overload, output short circuit, or an open loop condition, *TinySwitch-III* enters into auto-restart operation. An internal counter clocked by the oscillator is reset every time the EN/UV pin is pulled low. If the EN/UV pin is not pulled low for 64 ms, the power MOSFET switching is normally disabled for 2.5 seconds (except in the case of line under-voltage condition, in which case it is disabled until the condition is removed). The auto-restart alternately enables and disables the switching of the power MOSFET until the fault condition is removed. Figure 5 illustrates auto-restart circuit operation in the presence of an output short circuit.

In the event of a line under-voltage condition, the switching of the power MOSFET is disabled beyond its normal 2.5 seconds until the line under-voltage condition ends.

Adaptive Switching Cycle On-Time Extension
Adaptive switching cycle on-time extension keeps the cycle on until current limit is reached, instead of prematurely terminating after the DC_{MAX} signal goes low. This feature reduces the minimum input voltage required to maintain regulation, extending hold-up time and minimizing the size of bulk capacitor required. The on-time extension is disabled during the startup of the power supply, until the power supply output reaches regulation.

Line Under-Voltage Sense Circuit
The DC line voltage can be monitored by connecting an external resistor from the DC line to the EN/UV pin. During power-up or when the switching of the power MOSFET is disabled in auto-restart, the current into the EN/UV pin must exceed 25 µA to initiate switching of the power MOSFET. During power-up, this is accomplished by holding the BYPASS/MULTI-FUNCTION pin to 4.9 V while the line under-voltage condition exists. The BYPASS/MULTI-FUNCTION pin then rises from 4.9 V to 5.85 V when the line under-voltage condition goes away. When the switching of the power MOSFET is disabled in auto-restart mode and a line under-voltage condition exists, the auto-restart counter is stopped. This stretches the disable time beyond its normal 2.5 seconds until the line under-voltage condition ends.

The line under-voltage circuit also detects when there is no external resistor connected to the EN/UV pin (less than ~1 µA into the pin). In this case the line under-voltage function is disabled.

TinySwitch-III Operation

TinySwitch-III devices operate in the current limit mode. When enabled, the oscillator turns the power MOSFET on at the beginning of each cycle. The MOSFET is turned off when the current ramps up to the current limit or when the DC_{MAX} limit is reached. Since the highest current limit level and frequency of a *TinySwitch-III* design are constant, the power delivered to the

load is proportional to the primary inductance of the transformer and peak primary current squared. Hence, designing the supply involves calculating the primary inductance of the transformer for the maximum output power required. If the *TinySwitch-III* is appropriately chosen for the power level, the current in the calculated inductance will ramp up to current limit before the DC_{MAX} limit is reached.

Enable Function

TinySwitch-III senses the EN/UV pin to determine whether or not to proceed with the next switching cycle. The sequence of cycles is used to determine the current limit. Once a cycle is started, it always completes the cycle (even when the EN/UV pin changes state half way through the cycle). This operation results in a power supply in which the output voltage ripple is determined by the output capacitor, amount of energy per switch cycle and the delay of the feedback.

The EN/UV pin signal is generated on the secondary by comparing the power supply output voltage with a reference voltage. The EN/UV pin signal is high when the power supply output voltage is less than the reference voltage.

In a typical implementation, the EN/UV pin is driven by an optocoupler. The collector of the optocoupler transistor is connected to the EN/UV pin and the emitter is connected to the SOURCE pin. The optocoupler LED is connected in series with a Zener diode across the DC output voltage to be regulated. When the output voltage exceeds the target regulation voltage level (optocoupler LED voltage drop plus Zener voltage), the optocoupler LED will start to conduct, pulling the EN/UV pin low. The Zener diode can be replaced by a TL431 reference circuit for improved accuracy.

ON/OFF Operation with Current Limit State Machine

The internal clock of the *TinySwitch-III* runs all the time. At the beginning of each clock cycle, it samples the EN/UV pin to decide whether or not to implement a switch cycle, and based on the sequence of samples over multiple cycles, it determines the appropriate current limit. At high loads, the state machine sets the current limit to its highest value. At lighter loads, the state machine sets the current limit to reduced values.

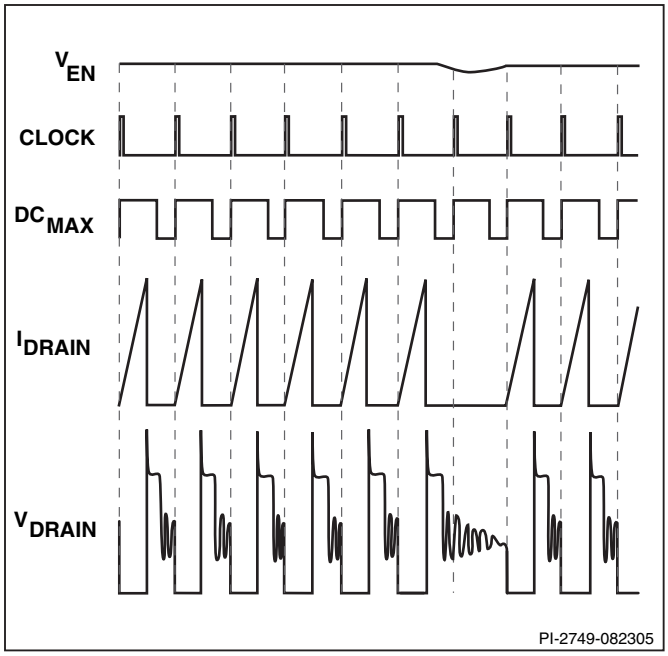

Figure 6. Operation at Near Maximum Loading.

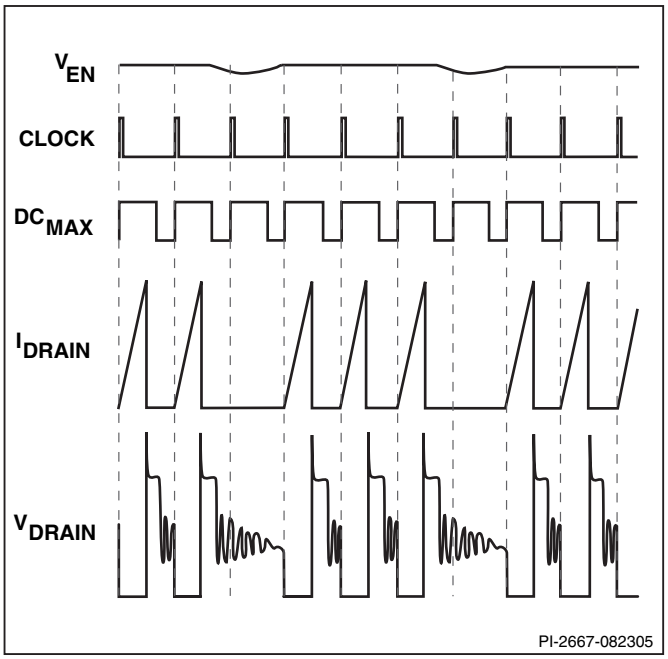

Figure 7. Operation at Moderately Heavy Loading.

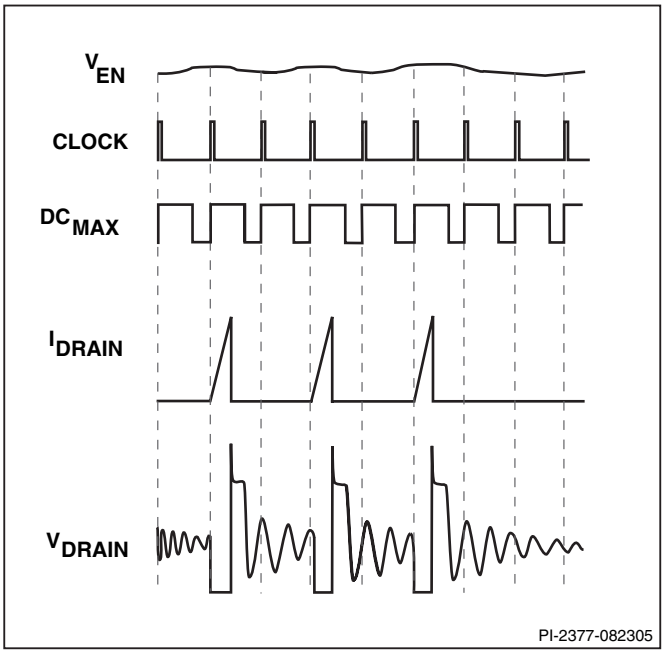

Figure 8. Operation at Medium Loading.

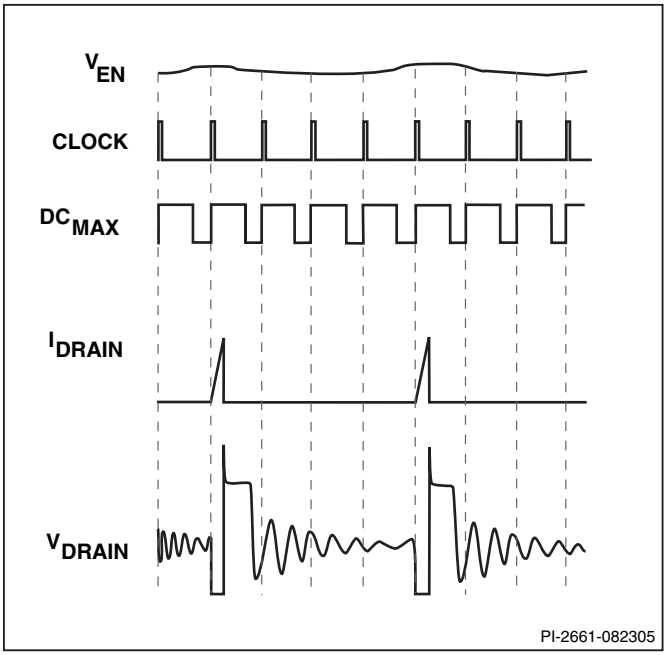

Figure 9. Operation at Very Light Load.

At near maximum load, *TinySwitch-III* will conduct during nearly all of its clock cycles (Figure 6). At slightly lower load, it will "skip" additional cycles in order to maintain voltage regulation at the power supply output (Figure 7). At medium loads, cycles will be skipped and the current limit will be reduced (Figure 8). At very light loads, the current limit will be reduced even further (Figure 9). Only a small percentage of cycles will occur to satisfy the power consumption of the power supply.

The response time of the ON/OFF control scheme is very fast compared to PWM control. This provides tight regulation and excellent transient response.

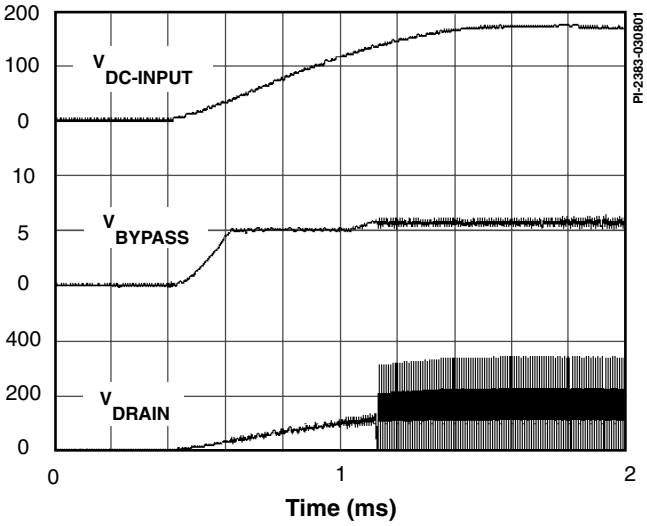

Figure 10. Power-Up with Optional External UV Resistor (4 MΩ) Connected to EN/UV Pin.

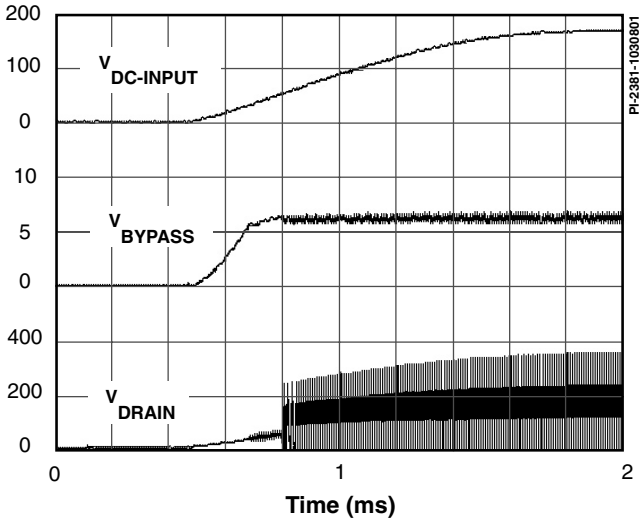

Figure 11. Power-Up Without Optional External UV Resistor Connected to EN/UV Pin.

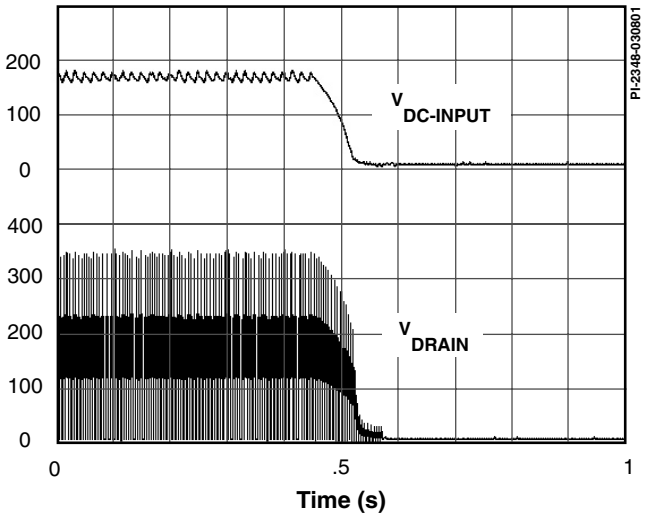

Figure 12. Normal Power-Down Timing (without UV).

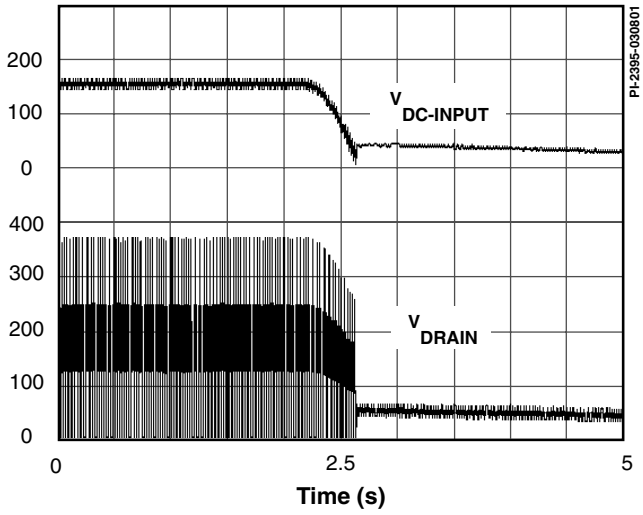

Figure 13. Slow Power-Down Timing with Optional External (4 MΩ) UV Resistor Connected to EN/UV Pin.

Power Up/Down

The *TinySwitch-III* requires only a 0.1 µF capacitor on the BYPASS/MULTI-FUNCTION pin to operate with standard current limit. Because of its small size, the time to charge this capacitor is kept to an absolute minimum, typically 0.6 ms. The time to charge will vary in proportion to the BYPASS/MULTI-FUNCTION pin capacitor value when selecting different current limits. Due to the high bandwidth of the ON/OFF feedback, there is no overshoot at the power supply output. When an external resistor (4 MΩ) is connected from the positive DC input to the EN/UV pin, the power MOSFET switching will be delayed during power-up until the DC line voltage exceeds the threshold (100 V). Figures 10 and 11 show the power-up timing waveform in applications with and without an external resistor (4 MΩ) connected to the EN/UV pin.

Under startup and overload conditions, when the conduction time is less than 400 ns, the device reduces the switching frequency to maintain control of the peak drain current.

During power-down, when an external resistor is used, the power MOSFET will switch for 64 ms after the output loses regulation. The power MOSFET will then remain off without any glitches since the under-voltage function prohibits restart when the line voltage is low.

Figure 12 illustrates a typical power-down timing waveform. Figure 13 illustrates a very slow power-down timing waveform as in standby applications. The external resistor (4 MΩ) is connected to the EN/UV pin in this case to prevent unwanted restarts.

No bias winding is needed to provide power to the chip because it draws the power directly from the DRAIN pin (see Functional Description above). This has two main benefits. First, for a nominal application, this eliminates the cost of a bias winding and associated components. Secondly, for battery charger applications, the current-voltage characteristic often allows the output voltage to fall close to zero volts while still delivering power. *TinySwitch-III* accomplishes this without a forward bias winding and its many associated components. For applications that require very low no-load power consumption (50 mW), a resistor from a bias winding to the BYPASS/MULTI-FUNCTION pin can provide the power to the chip. The minimum recommended current supplied is 1 mA. The BYPASS/MULTI-FUNCTION pin in this case will be clamped at 6.4 V. This method will eliminate the power draw from the DRAIN pin, thereby reducing the no-load power consumption and improving full-load efficiency.

Current Limit Operation

Each switching cycle is terminated when the DRAIN current reaches the current limit of the device. Current limit operation provides good line ripple rejection and relatively constant power delivery independent of input voltage.

BYPASS/MULTI-FUNCTION Pin Capacitor

The BYPASS/MULTI-FUNCTION pin can use a ceramic capacitor as small as 0.1 µF for decoupling the internal power supply of the device. A larger capacitor size can be used to adjust the current limit. For TNY275-280, a 1 µF BP/M pin capacitor will select a lower current limit equal to the standard current limit of the next smaller device and a 10 µF BP/M pin capacitor will select a higher current limit equal to the standard current limit of the next larger device. The higher current limit level of the TNY280 is set to 850 mA typical. The TNY274 MOSFET does not have the capability for increased current limit so this feature is not available in this device.

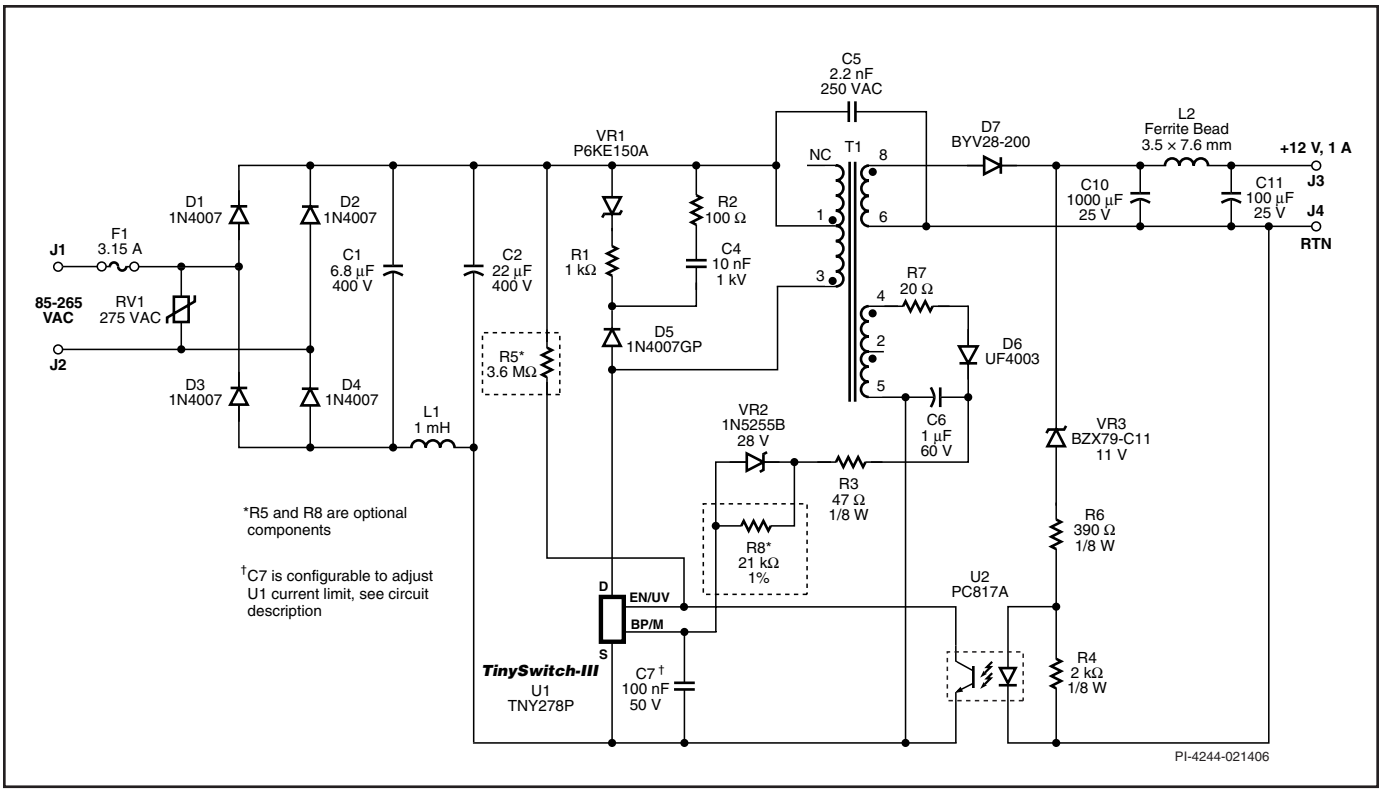

Figure 14. TNY278P, 12 V, 1 A Universal Input Power Supply.

Applications Example

The circuit shown in Figure 14 is a low cost, high efficiency, flyback power supply designed for 12 V, 1 A output from universal input using the TNY278.

The supply features under-voltage lockout, primary sensed output overvoltage latching shutdown protection, high efficiency (>80%), and very low no-load consumption (<50 mW at 265 VAC). Output regulation is accomplished using a simple zener reference and optocoupler feedback.

The rectified and filtered input voltage is applied to the primary winding of T1. The other side of the transformer primary is driven by the integrated MOSFET in U1. Diode D5, C2, R1, R2, and VR1 comprise the clamp circuit, limiting the leakage inductance turn-off voltage spike on the DRAIN pin to a safe value. The use of a combination a Zener clamp and parallel RC optimizes both EMI and energy efficiency. Resistor R2 allows the use of a slow recovery, low cost, rectifier diode by limiting the reverse current through D5. The selection of a slow diode also improves efficiency and conducted EMI but should be a glass passivated type, with a specified recovery time of ≤2 µs.

The output voltage is regulated by the Zener diode VR3. When the output voltage exceeds the sum of the Zener and optocoupler LED forward drop, current will flow in the optocoupler LED. This will cause the transistor of the optocoupler to sink current. When this current exceeds the ENABLE pin threshold current the next switching cycle is inhibited. When the output voltage falls below the feedback threshold, a conduction cycle is allowed to occur and, by adjusting the number of enabled cycles, output regulation is maintained. As the load reduces, the number of enabled cycles decreases, lowering the effective switching frequency and scaling switching losses with load. This provides almost constant efficiency down to very light loads, ideal for meeting energy efficiency requirements.

As the *TinySwitch-III* devices are completely self-powered, there is no requirement for an auxiliary or bias winding on the transformer. However by adding a bias winding, the output overvoltage protection feature can be configured, protecting the load against open feedback loop faults.

When an overvoltage condition occurs, such that bias voltage exceeds the sum of VR2 and the BYPASS/MULTIFUNCTION (BP/M) pin voltage (28 V+5.85 V), current begins to flow into the BP/M pin. When this current exceeds 5 mA the internal latching shutdown circuit in *TinySwitch-III* is activated. This condition is reset when the BP/M pin voltage drops below 2.6 V after removal of the AC input. In the example shown, on opening the loop, the OVP trips at an output of 17 V.

For lower no-load input power consumption, the bias winding may also be used to supply the *TinySwitch-III* device. Resistor R8 feeds current into the BP/M pin, inhibiting the internal high voltage current source that normally maintains the BP/M pin capacitor voltage (C7) during the internal MOSFET off time. This reduces the no-load consumption of this design from 140 mW to 40 mW at 265 VAC.

Under-voltage lockout is configured by R5 connected between the DC bus and EN/UV pin of U1. When present, switching is inhibited until the current in the EN/UV pin exceeds 25 µA. This allows the startup voltage to be programmed within the normal operating input voltage range, preventing glitching of the output under abnormal low voltage conditions and also on removal of the AC input.

In addition to the simple input pi filter (C1, L1, C2) for differential mode EMI, this design makes use of *E-Shield*™ shielding techniques in the transformer to reduce common mode EMI displacement currents, and R2 and C4 as a damping network to reduce high frequency transformer ringing. These techniques, combined with the frequency jitter of TNY278, give excellent conducted and radiated EMI performance with this design achieving >12 dBµV of margin to EN55022 Class B conducted EMI limits.

For design flexibility the value of C7 can be selected to pick one of the 3 current limits options in U1. This allows the designer to select the current limit appropriate for the application.

- Standard current limit (I_{LIMIT}) is selected with a 0.1 µF BP/M pin capacitor and is the normal choice for typical enclosed adapter applications.
- When a 1 µF BP/M pin capacitor is used, the current limit is reduced ($I_{LIMITred}$ or I_{LIMIT}-1) offering reduced RMS device currents and therefore improved efficiency, but at the expense of maximum power capability. This is ideal for thermally challenging designs where dissipation must be minimized.
- When a 10 µF BP/M pin capacitor is used, the current limit is increased ($I_{LIMITinc}$ or I_{LIMIT}+1), extending the power capability for applications requiring higher peak power or continuous power where the thermal conditions allow.

Further flexibility comes from the current limits between adjacent *TinySwitch-III* family members being compatible. The reduced current limit of a given device is equal to the standard current limit of the next smaller device and the increased current limit is equal to the standard current limit of the next larger device.

Key Application Considerations

TinySwitch-III Design Considerations

Output Power Table

The data sheet output power table (Table 1) represents the minimum practical continuous output power level that can be obtained under the following assumed conditions:

1. The minimum DC input voltage is 100 V or higher for 85 VAC input, or 220 V or higher for 230 VAC input or 115 VAC with a voltage doubler. The value of the input capacitance should be sized to meet these criteria for AC input designs.
2. Efficiency of 75%.
3. Minimum data sheet value of I^2f.
4. Transformer primary inductance tolerance of ±10%.
5. Reflected output voltage (V_{OR}) of 135 V.
6. Voltage only output of 12 V with a fast PN rectifier diode.
7. Continuous conduction mode operation with transient K_P* value of 0.25.
8. Increased current limit is selected for peak and open frame power columns and standard current limit for adapter columns.
9. The part is board mounted with SOURCE pins soldered to a sufficient area of copper and/or a heatsink is used to keep the SOURCE pin temperature at or below 110 °C.
10. Ambient temperature of 50 °C for open frame designs and 40 °C for sealed adapters.

*Below a value of 1, K_P is the ratio of ripple to peak primary current. To prevent reduced power capability due to premature termination of switching cycles a transient K_P limit of ≥0.25 is recommended. This prevents the initial current limit (I_{INIT}) from being exceeded at MOSFET turn on.

For reference, Table 2 provides the minimum practical power delivered from each family member at the three selectable current limit values. This assumes open frame operation (not thermally limited) and otherwise the same conditions as listed above. These numbers are useful to identify the correct current limit to select for a given device and output power requirement.

Overvoltage Protection

The output overvoltage protection provided by *TinySwitch-III* uses an internal latch that is triggered by a threshold current of approximately 5.5 mA into the BP/M pin. In addition to an internal filter, the BP/M pin capacitor forms an external filter providing noise immunity from inadvertent triggering. For the bypass capacitor to be effective as a high frequency filter, the capacitor should be located as close as possible to the SOURCE and BP/M pins of the device.

OUTPUT POWER TABLE						
PRODUCT	230 VAC ±15%			85-265 VAC		
	I_{LIMIT}-1	I_{LIMIT}	I_{LIMIT}+1	I_{LIMIT}-1	I_{LIMIT}	I_{LIMIT}+1
TNY274 P or G	9	10.9	9.1	7.1	8.5	7.1
TNY275 P or G	10.8	12	15.1	8.4	9.3	11.8
TNY276 P or G	11.8	15.3	19.4	9.2	11.9	15.1
TNY277 P or G	15.1	19.6	23.7	11.8	15.3	18.5
TNY278 P or G	19.4	24	28	15.1	18.6	21.8
TNY279 P or G	23.7	28.4	32.2	18.5	22	25.2
TNY280 P or G	28	32.7	36.6	21.8	25.4	28.5

Table 2. Minimum Practical Power at Three Selectable Current Limit Levels.

For best performance of the OVP function, it is recommended that a relatively high bias winding voltage is used, in the range of 15 V-30 V. This minimizes the error voltage on the bias winding due to leakage inductance and also ensures adequate voltage during no-load operation from which to supply the BP/M pin for reduced no-load consumption.

Selecting the Zener diode voltage to be approximately 6 V above the bias winding voltage (28 V for 22 V bias winding) gives good OVP performance for most designs, but can be adjusted to compensate for variations in leakage inductance. Adding additional filtering can be achieved by inserting a low value (10 Ω to 47 Ω) resistor in series with the bias winding diode and/or the OVP Zener as shown by R7 and R3 in Figure 14. The resistor in series with the OVP Zener also limits the maximum current into the BP/M pin.

Reducing No-load Consumption

As *TinySwitch-III* is self-powered from the BP/M pin capacitor, there is no need for an auxillary or bias winding to be provided on the transformer for this purpose. Typical no-load consumption when self-powered is <150 mW at 265 VAC input. The addition of a bias winding can reduce this down to <50 mW by supplying the *TinySwitch-III* from the lower bias voltage and inhibiting the internal high voltage current source. To achieve this, select the value of the resistor (R8 in Figure 14) to provide the data sheet DRAIN supply current. In practice, due to the reduction of the bias voltage at low load, start with a value equal to 40% greater than the data sheet maximum current, and then increase the value of the resistor to give the lowest no-load consumption.

Audible Noise

The cycle skipping mode of operation used in *TinySwitch-III* can generate audio frequency components in the transformer. To limit this audible noise generation the transformer should be designed such that the peak core flux density is below 3000 Gauss (300 mT). Following this guideline and using the standard transformer production technique of dip varnishing practically eliminates audible noise. Vacuum impregnation of the transformer should not be used due to the high primary capacitance and increased losses that result. Higher flux densities are possible, however careful evaluation of the audible noise performance should be made using production transformer samples before approving the design.

Ceramic capacitors that use dielectrics such as Z5U, when used in clamp circuits, may also generate audio noise. If this is the case, try replacing them with a capacitor having a different dielectric or construction, for example a film type.

TinySwitch-III Layout Considerations

Layout

See Figure 15 for a recommended circuit board layout for *TinySwitch-III*.

Single Point Grounding

Use a single point ground connection from the input filter capacitor to the area of copper connected to the SOURCE pins.

Bypass Capacitor (C_{BP})

The BP/M pin capacitor should be located as near as possible to the BP/M and SOURCE pins.

Primary Loop Area

The area of the primary loop that connects the input filter capacitor, transformer primary and *TinySwitch-III* together should be kept as small as possible.

Primary Clamp Circuit

A clamp is used to limit peak voltage on the DRAIN pin at turn off. This can be achieved by using an RCD clamp or a Zener (~200 V) and diode clamp across the primary winding. In all cases, to minimize EMI, care should be taken to minimize the circuit path from the clamp components to the transformer and *TinySwitch-III*.

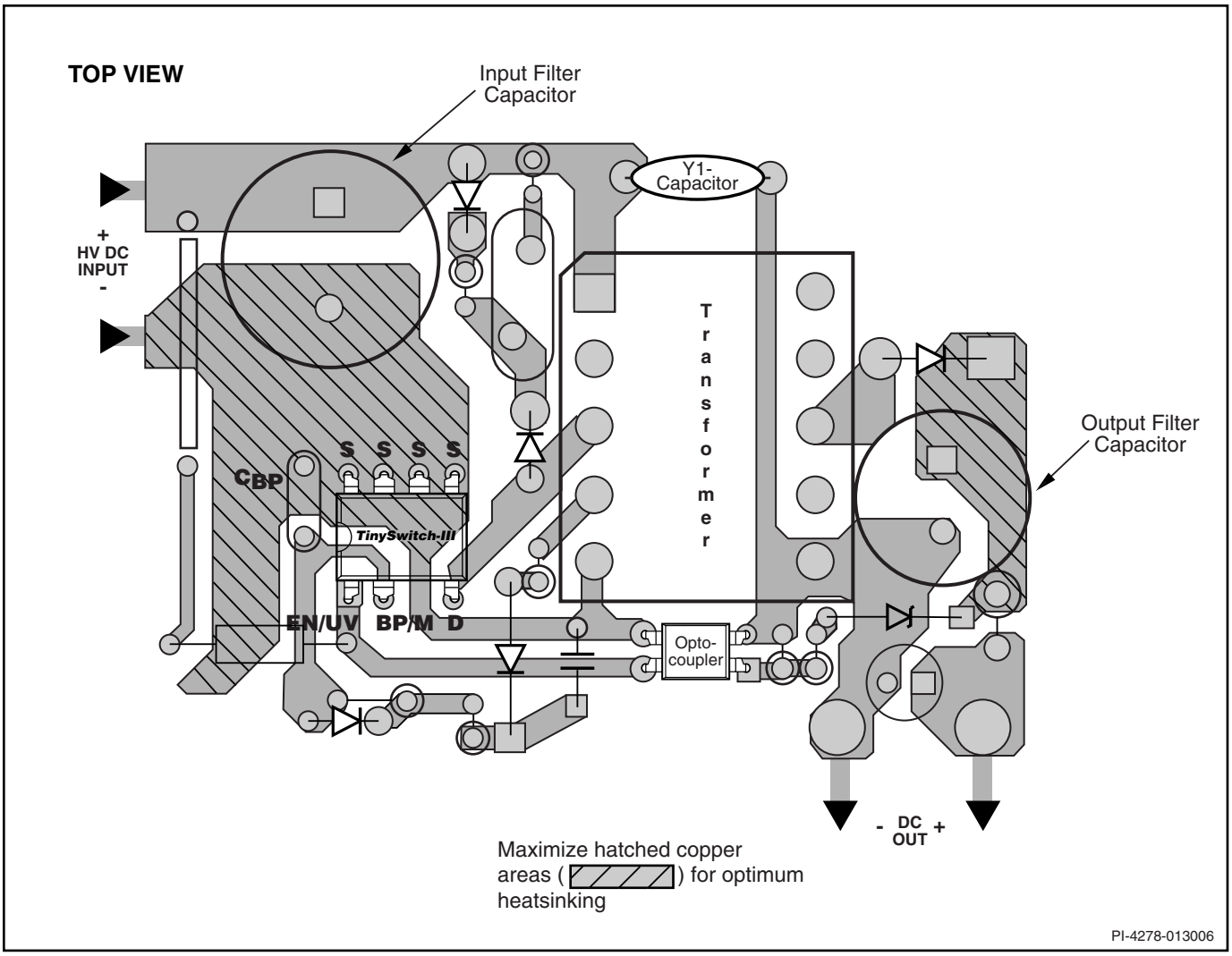

Figure 15. Recommended Circuit Board Layout for TinySwitch-III with Under-Voltage Lock Out Resistor.

Thermal Considerations

The four SOURCE pins are internally connected to the IC lead frame and provide the main path to remove heat from the device. Therefore all the SOURCE pins should be connected to a copper area underneath the *TinySwitch-III* to act not only as a single point ground, but also as a heatsink. As this area is connected to the quiet source node, this area should be maximized for good heatsinking. Similarly for axial output diodes, maximize the PCB area connected to the cathode.

Y-Capacitor

The placement of the Y-capacitor should be directly from the primary input filter capacitor positive terminal to the common/return terminal of the transformer secondary. Such a placement will route high magnitude common mode surge currents away from the *TinySwitch-III* device. Note – if an input π (C, L, C) EMI filter is used then the inductor in the filter should be placed between the negative terminals of the input filter capacitors.

Optocoupler

Place the optocoupler physically close to the *TinySwitch-III* to minimizing the primary-side trace lengths. Keep the high current, high voltage drain and clamp traces away from the optocoupler to prevent noise pick up.

Output Diode

For best performance, the area of the loop connecting the secondary winding, the output diode and the output filter capacitor, should be minimized. In addition, sufficient copper area should be provided at the anode and cathode terminals of the diode for heatsinking. A larger area is preferred at the quiet cathode terminal. A large anode area can increase high frequency radiated EMI.

Quick Design Checklist

As with any power supply design, all *TinySwitch-III* designs should be verified on the bench to make sure that component specifications are not exceeded under worst case conditions. The following minimum set of tests is strongly recommended:

1. Maximum drain voltage – Verify that V_{DS} does not exceed 650 V at highest input voltage and peak (overload) output power. The 50 V margin to the 700 V BV_{DSS} specification gives margin for design variation.
2. Maximum drain current – At maximum ambient temperature, maximum input voltage and peak output (overload) power, verify drain current waveforms for any signs of transformer saturation and excessive leading edge current spikes at startup. Repeat under steady state conditions and verify that the leading edge current spike event is below $I_{LIMIT(Min)}$ at the end of the $t_{LEB(Min)}$. Under all conditions, the maximum drain current should be below the specified absolute maximum ratings.
3. Thermal Check – At specified maximum output power, minimum input voltage and maximum ambient temperature, verify that the temperature specifications are not exceeded for *TinySwitch-III*, transformer, output diode, and output capacitors. Enough thermal margin should be allowed for part-to-part variation of the $R_{DS(ON)}$ of *TinySwitch-III* as specified in the data sheet. Under low line, maximum power, a maximum *TinySwitch-III* SOURCE pin temperature of 110 °C is recommended to allow for these variations.

ABSOLUTE MAXIMUM RATINGS[1,5]

DRAIN Voltage .....-0.3 V to 700 V
DRAIN Peak Current: TNY274.....400 (750) mA[2]
TNY275.....560 (1050) mA[2]
TNY276.....720 (1350) mA[2]
TNY277.....880 (1650) mA[2]
TNY278.....1040 (1950) mA[2]
TNY279 ..... 1200 (2250) mA[2]
TNY280 ..... 1360 (2550) mA[2]
EN/UV Voltage ..... -0.3 V to 9 V
EN/UV Current ..... 100 mA
BP/M Voltage .....-0.3 V to 9 V
Storage Temperature .....-65 °C to 150 °C
Operating Junction Temperature[3] .....-40 °C to 150 °C
Lead Temperature[4] ..... 260 °C

Notes:
1. All voltages referenced to SOURCE, T_A = 25 °C.
2. The higher peak DRAIN current is allowed while the DRAIN voltage is simultaneously less than 400 V.
3. Normally limited by internal circuitry.
4. 1/16 in. from case for 5 seconds.
5. Maximum ratings specified may be applied one at a time, without causing permanent damage to the product. Exposure to Absolute Maximum Rating conditions for extended periods of time may affect product reliability.

THERMAL IMPEDANCE

Thermal Impedance: P or G Package:
(θ_{JA}) ..... 70 °C/W[2]; 60 °C/W[3]
(θ_{JC})[1] ..... 11 °C/W

Notes:
1. Measured on the SOURCE pin close to plastic interface.
2. Soldered to 0.36 sq. in. (232 mm^2), 2 oz. (610 g/m^2) copper clad.
3. Soldered to 1 sq. in. (645 mm^2), 2 oz. (610 g/m^2) copper clad.

Parameter	Symbol	Conditions SOURCE = 0 V; T_J = -40 to 125 °C See Figure 16 (Unless Otherwise Specified)		Min	Typ	Max	Units
CONTROL FUNCTIONS							
Output Frequency in Standard Mode	f_{OSC}	T_J = 25 °C See Figure 4	Average	124	132	140	kHz
			Peak-Peak Jitter		8		
Maximum Duty Cycle	DC_{MAX}	S1 Open		62	65		%
EN/UV Pin Upper Turnoff Threshold Current	I_{DIS}			-150	-115	-90	µA
EN/UV Pin Voltage	V_{EN}	$I_{EN/UV}$ = 25 µA		1.8	2.2	2.6	V
		$I_{EN/UV}$ = -25 µA		0.8	1.2	1.6	
DRAIN Supply Current	I_{S1}	EN/UV Current > I_{DIS} (MOSFET Not Switching) See Note A			290		µA
	I_{S2}	EN/UV Open (MOSFET Switching at f_{OSC}) See Note B	TNY274		275	360	µA
			TNY275		295	400	
			TNY276		310	430	
			TNY277		365	460	
			TNY278		445	540	
			TNY279		510	640	
			TNY280		630	760	

Parameter	Symbol	Conditions SOURCE = 0 V; T_J = -40 to 125 °C See Figure 16 (Unless Otherwise Specified)		Min	Typ	Max	Units
CONTROL FUNCTIONS (cont.)							
BP/M Pin Charge Current	I_{CH1}	$V_{BP/M}$ = 0 V, T_J = 25 °C See Note C, D	TNY274	-6	-3.8	-1.8	mA
			TNY275-279	-8.3	-5.4	-2.5	
			TNY280	-9.7	-6.8	-3.9	
	I_{CH2}	$V_{BP/M}$ = 4 V, T_J = 25 °C See Note C, D	TNY274	-4.1	-2.3	-1	
			TNY275-279	-5	-3.5	-1.5	
			TNY280	-6.6	-4.6	-2.1	
BP/M Pin Voltage	$V_{BP/M}$	See Note C		5.6	5.85	6.15	V
BP/M Pin Voltage Hysteresis	$V_{BP/MH}$			0.80	0.95	1.20	V
BP/M Pin Shunt Voltage	V_{SHUNT}	I_{BP} = 2 mA		6.0	6.4	6.7	V
EN/UV Pin Line Under-Voltage Threshold	I_{LUV}	T_J = 25 °C		22.5	25	27.5	µA
CIRCUIT PROTECTION							
Standard Current Limit (BP/M Capacitor = 0.1 µF) See Note D	I_{LIMIT}	TNY274 T_J = 25 °C	di/dt = 50 mA/µs See Note E	233	250	267	mA
		TNY275 T_J = 25 °C	di/dt = 55 mA/µs See Note E	256	275	294	
		TNY276 T_J = 25 °C	di/dt = 70 mA/µs See Note E	326	350	374	
		TNY277 T_J = 25 °C	di/dt = 90 mA/µs See Note E	419	450	481	
		TNY278 T_J = 25 °C	di/dt = 110 mA/µs See Note E	512	550	588	
		TNY279 T_J = 25 °C	di/dt = 130 mA/µs See Note E	605	650	695	
		TNY280 T_J = 25 °C	di/dt = 150 mA/µs See Note E	698	750	802	
Reduced Current Limit (BP/M Capacitor = 1 µF)	$I_{LIMITred}$	TNY274 T_J = 25 °C	di/dt = 50 mA/µs See Note E	196	210	233	mA
		TNY275 T_J = 25 °C	di/dt = 55 mA/µs See Note E	233	250	277	

Parameter	Symbol	Conditions SOURCE = 0 V; T_J = -40 to 125 °C See Figure 16 (Unless Otherwise Specified)		Min	Typ	Max	Units
CIRCUIT PROTECTION (cont.)							
Reduced Current Limit (BP/M Capacitor = 1 µF) See Note D	$I_{LIMITred}$	TNY276 T_J = 25 °C	di/dt = 70 mA/µs See Note E	256	275	305	mA
		TNY277 T_J = 25 °C	di/dt = 90 mA/µs See Note E	326	350	388	
		TNY278 T_J = 25 °C	di/dt = 110 mA/µs See Note E	419	450	499	
		TNY279 T_J = 25 °C	di/dt = 130 mA/µs See Note E	512	550	610	
		TNY280 T_J = 25 °C	di/dt = 150 mA/µs See Note E	605	650	721	
Increased Current Limit (BP/M Capacitor = 10 µF) See Note D	$I_{LIMITinc}$	TNY274 T_J = 25 °C	di/dt = 50 mA/µs See Note E, F	196	210	233	mA
		TNY275 T_J = 25 °C	di/dt = 55 mA/µs See Note E	326	350	388	
		TNY276 T_J = 25 °C	di/dt = 70 mA/µs See Note E	419	450	499	
		TNY277 T_J = 25 °C	di/dt = 90 mA/µs See Note E	512	550	610	
		TNY278 T_J = 25 °C	di/dt = 110 mA/µs See Note E	605	650	721	
		TNY279 T_J = 25 °C	di/dt = 130 mA/µs See Note E	698	750	833	
		TNY280 T_J = 25 °C	di/dt = 150 mA/µs See Note E	791	850	943	
Power Coefficient	I^2f	$I^2f = I_{LIMIT(TYP)}^2 \times f_{OSC(TYP)}$	Standard Current Limit	0.9 × I^2f	I^2f	1.12 × I^2f	A^2Hz
			Reduced or Increased Current Limit	0.9 × I^2f	I^2f	1.16 × I^2f	
Initial Current Limit	I_{INIT}	See Figure 19 T_J = 25 °C, See Note G		0.75 × $I_{LIMIT(MIN)}$			mA
Leading Edge Blanking Time	t_{LEB}	T_J = 25 °C See Note G		170	215		ns
Current Limit Delay	t_{ILD}	T_J = 25 °C See Note G, H			150		ns
Thermal Shutdown Temperature	T_{SD}			135	142	150	°C

Parameter	Symbol	Conditions SOURCE = 0 V; T_J = -40 to 125 °C See Figure 16 (Unless Otherwise Specified)		Min	Typ	Max	Units
CIRCUIT PROTECTION (cont.)							
Thermal Shut-down Hysteresis	T_{SDH}				75		°C
BP/M Pin Shut-down Threshold Current	I_{SD}			4	5.5	7.5	mA
BP/M Pin Power-Up Reset Thresh-old Voltage	$V_{BP/M(RESET)}$			1.6	2.6	3.6	V
OUTPUT							
ON-State Resistance	$R_{DS(ON)}$	TNY274 I_D = 25 mA	T_J = 25 °C		28	32	Ω
			T_J = 100 °C		42	48	
		TNY275 I_D = 28 mA	T_J = 25 °C		19	22	
			T_J = 100 °C		29	33	
		TNY276 I_D = 35 mA	T_J = 25 °C		14	16	
			T_J = 100 °C		21	24	
		TNY277 I_D = 45 mA	T_J = 25 °C		7.8	9.0	
			T_J = 100 °C		11.7	13.5	
		TNY278 I_D = 55 mA	T_J = 25 °C		5.2	6.0	
			T_J = 100 °C		7.8	9.0	
		TNY279 I_D = 65 mA	T_J = 25 °C		3.9	4.5	
			T_J = 100 °C		5.8	6.7	
		TNY280 I_D = 75 mA	T_J = 25 °C		2.6	3.0	
			T_J = 100 °C		3.9	4.5	
OFF-State Drain Leakage Current	I_{DSS1}	$V_{BP/M}$ = 6.2 V $V_{EN/UV}$ = 0 V V_{DS} = 560 V T_J = 125 °C See Note I	TNY274-276			50	µA
			TNY277-278			100	
			TNY279-280			200	
	I_{DSS2}	$V_{BP/M}$ = 6.2 V $V_{EN/UV}$ = 0 V	V_{DS} = 375 V, T_J = 50 °C See Note G, I		15		
Breakdown Voltage	BV_{DSS}	V_{BP} = 6.2 V, $V_{EN/UV}$ = 0 V, See Note J, T_J = 25 °C		700			V
DRAIN Supply Voltage				50			V

Parameter	Symbol	Conditions SOURCE = 0 V; T_J = -40 to 125 °C See Figure 16 (Unless Otherwise Specified)	Min	Typ	Max	Units
OUTPUT (cont.)						
Auto-Restart ON-Time at f_{OSC}	t_{AR}	T_J = 25 °C See Note K		64		ms
Auto-Restart Duty Cycle	DC_{AR}	T_J = 25 °C		3		%

NOTES:

A. I_{S1} is an accurate estimate of device controller current consumption at no-load, since operating frequency is so low under these conditions. Total device consumption at no-load is the sum of I_{S1} and I_{DSS2}.

B Since the output MOSFET is switching, it is difficult to isolate the switching current from the supply current at the DRAIN. An alternative is to measure the BP/M pin current at 6.1 V.

C. BP/M pin is not intended for sourcing supply current to external circuitry.

D. To ensure correct current limit it is recommended that nominal 0.1 µF / 1 µF / 10 µF capacitors are used. In addition, the BP/M capacitor value tolerance should be equal or better than indicated below across the ambient temperature range of the target application. The minimum and maximum capacitor values are guaranteed by characterization.

Nominal BP/M Pin Cap Value	Tolerance Relative to Nominal Capacitor Value	
	Min	MAX
0.1 µF	-60%	+100%
1 µF	-50%	+100%
10 µF	-50%	NA

E. For current limit at other di/dt values, refer to Figure 23.

F. TNY274 does not set an increased current limit value, but with a 10 µF BP/M pin capacitor the current limit is the same as with a 1 µF BP/M pin capacitor (reduced current limit value).

G. This parameter is derived from characterization.

H. This parameter is derived from the change in current limit measured at 1X and 4X of the di/dt shown in the I_{LIMIT} specification.

I. I_{DSS1} is the worst case OFF state leakage specification at 80% of BV_{DSS} and maximum operating junction temperature. I_{DSS2} is a typical specification under worst case application conditions (rectified 265 VAC) for no-load consumption calculations.

J. Breakdown voltage may be checked against minimum BV_{DSS} specification by ramping the DRAIN pin voltage up to but not exceeding minimum BV_{DSS}.

K. Auto-restart on time has the same temperature characteristics as the oscillator (inversely proportional to frequency).

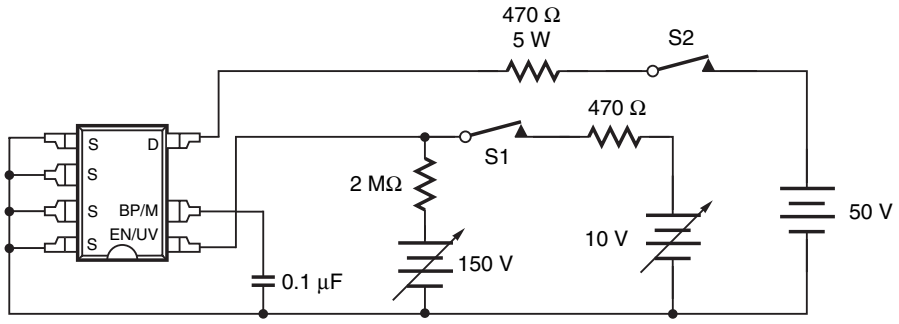

NOTE: This test circuit is not applicable for current limit or output characteristic measurements.

PI-4079-080905

Figure 16. General Test Circuit.

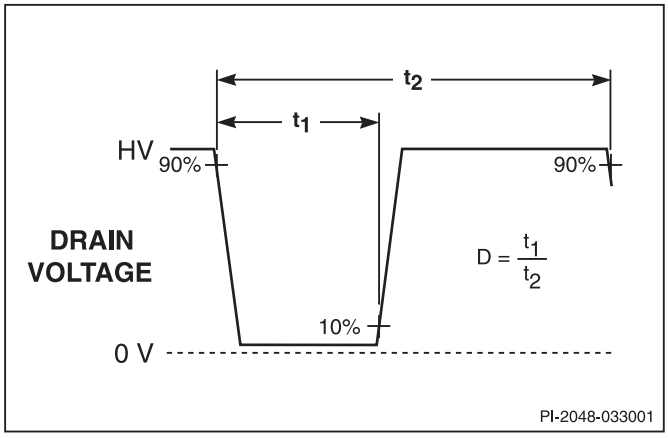

Figure 17. Duty Cycle Measurement.

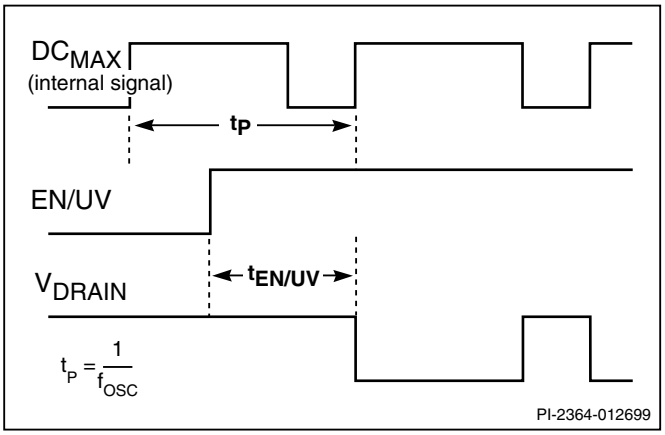

Figure 18. Output Enable Timing.

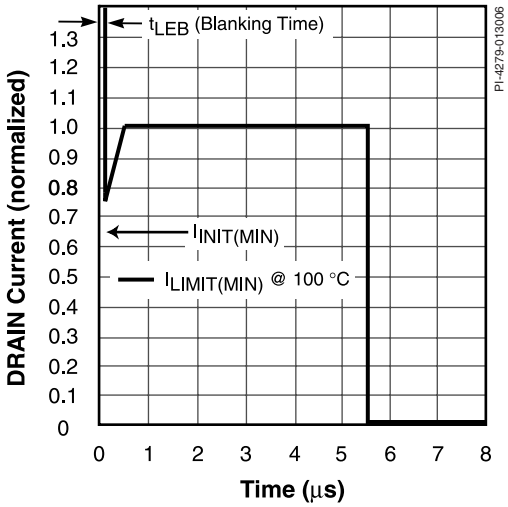

Figure 19. Current Limit Envelope.

Typical Performance Characteristics

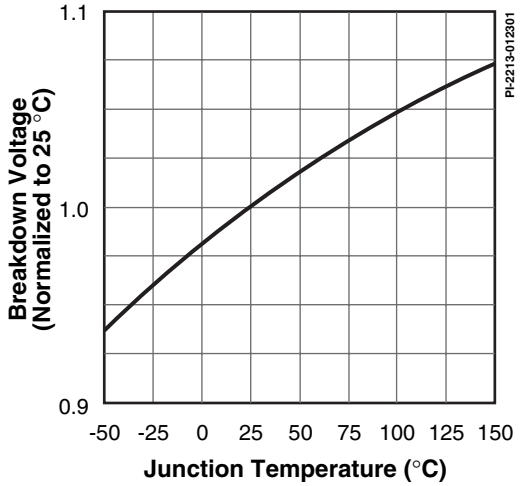

Figure 20. Breakdown vs. Temperature.

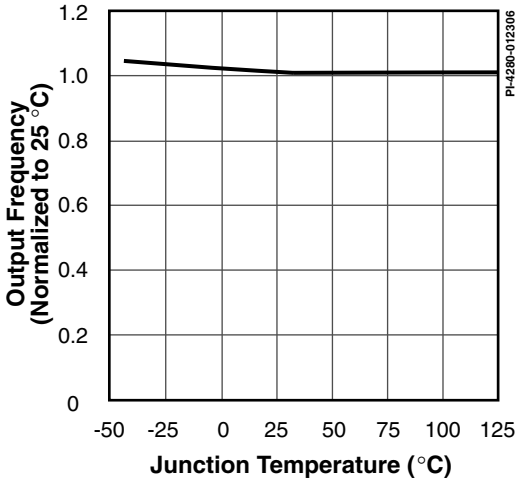

Figure 21. Frequency vs. Temperature.

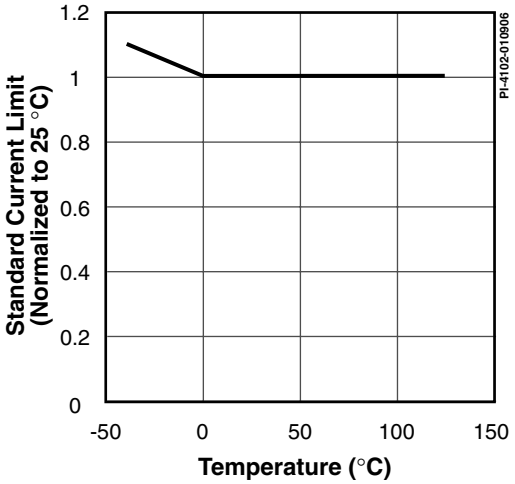

Figure 22. Standard Current Limit vs. Temperature.

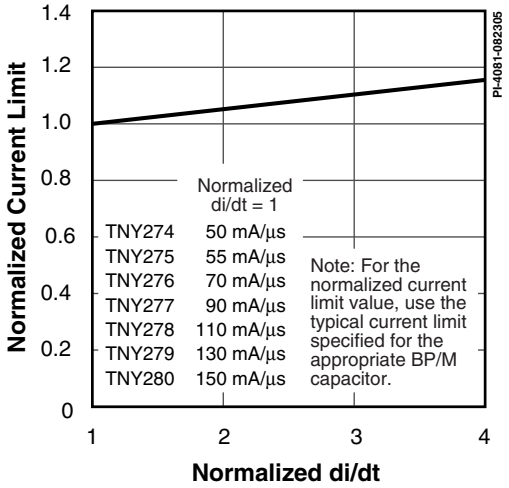

Figure 23. Current Limit vs. di/dt.

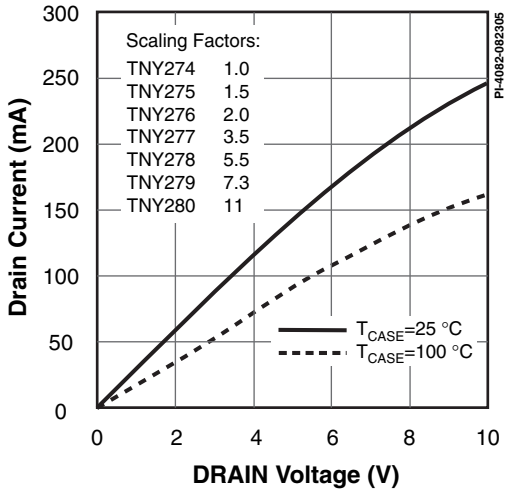

Figure 24. Output Characteristic.

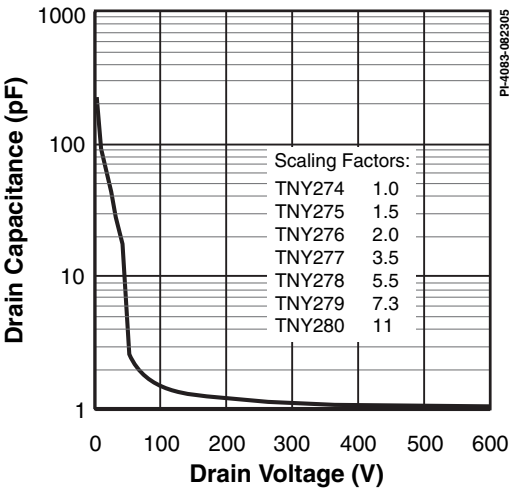

Figure 25. C_{OSS} vs. Drain Voltage.

Typical Performance Characteristics (cont.)

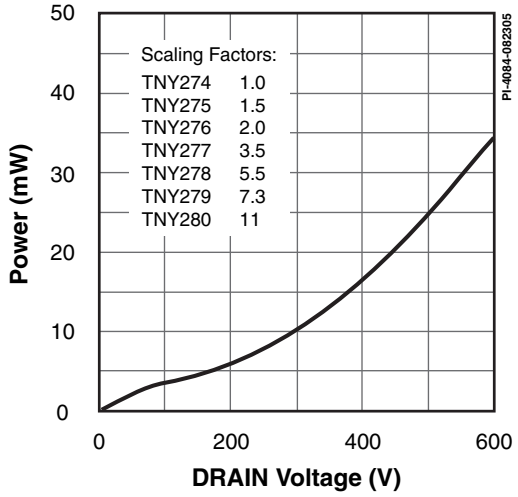

Figure 26. Drain Capacitance Power.

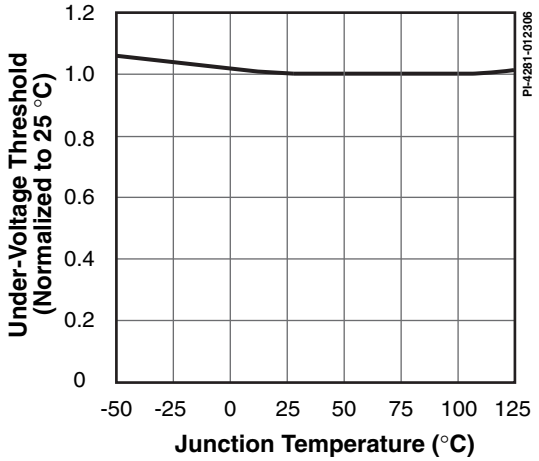

Figure 27. Under-Voltage Threshold vs. Temperature.

PART ORDERING INFORMATION

TNY 278 G N - TL	***TinySwitch* Product Family**	
	Series Number	
	Package Identifier	
	G	Plastic Surface Mount SMD-8C
	P	Plastic DIP-8C
	Lead Finish	
	N	Pure Matte Tin (Pb-Free)
	Tape & Reel and Other Options	
	Blank	Standard Configurations
	TL	Tape & Reel, 1000 pcs min./mult., G Package only

DIP-8C

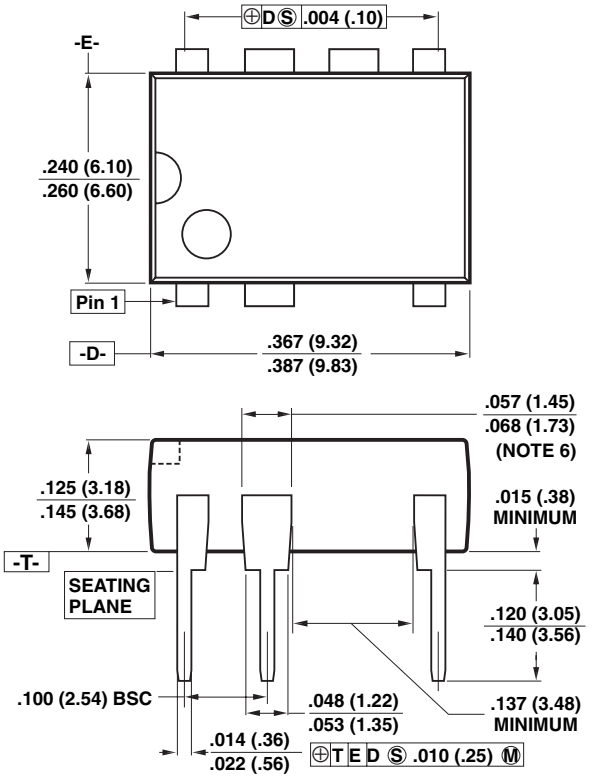

Notes:

1. Package dimensions conform to JEDEC specification MS-001-AB (Issue B 7/85) for standard dual-in-line (DIP) package with .300 inch row spacing.
2. Controlling dimensions are inches. Millimeter sizes are shown in parentheses.
3. Dimensions shown do not include mold flash or other protrusions. Mold flash or protrusions shall not exceed .006 (.15) on any side.
4. Pin locations start with Pin 1, and continue counter-clockwise to Pin 8 when viewed from the top. The notch and/or dimple are aids in locating Pin 1. Pin 3 is omitted.
5. Minimum metal to metal spacing at the package body for the omitted lead location is .137 inch (3.48 mm).
6. Lead width measured at package body.
7. Lead spacing measured with the leads constrained to be perpendicular to plane T.

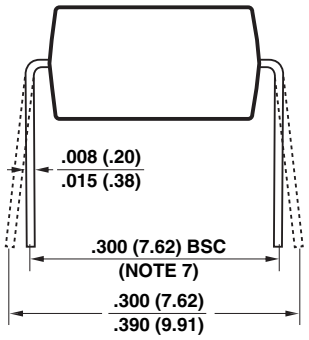

P08C

PI-3933-100504

SMD-8C

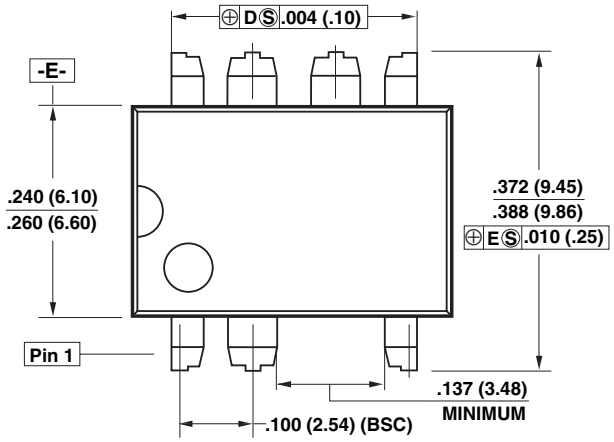

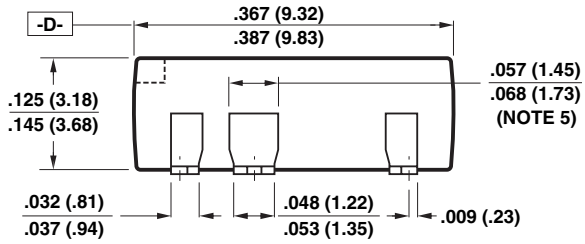

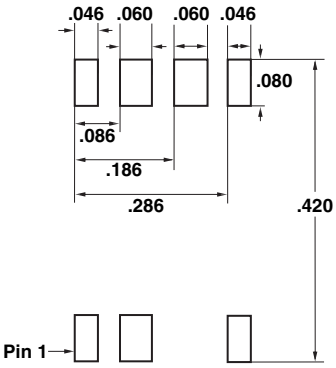

Solder Pad Dimensions

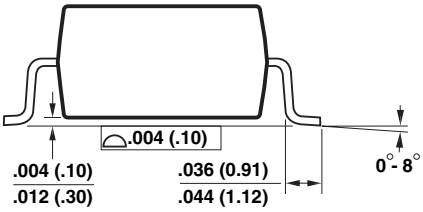

Notes:

1. Controlling dimensions are inches. Millimeter sizes are shown in parentheses.
2. Dimensions shown do not include mold flash or other protrusions. Mold flash or protrusions shall not exceed .006 (.15) on any side.
3. Pin locations start with Pin 1, and continue counter-clockwise to Pin 8 when viewed from the top. Pin 3 is omitted.
4. Minimum metal to metal spacing at the package body for the omitted lead location is .137 inch (3.48 mm).
5. Lead width measured at package body.
6. D and E are referenced datums on the package body.

G08C

PI-4015-013106

Revision	Notes	Date
D	Release final data sheet.	1/06
E	Corrected figure numbers and references.	2/06

For the latest updates, visit our website: *www.powerint.com*

Power Integrations reserves the right to make changes to its products at any time to improve reliability or manufacturability. Power Integrations does not assume any liability arising from the use of any device or circuit described herein. POWER INTEGRATIONS MAKES NO WARRANTY HEREIN AND SPECIFICALLY DISCLAIMS ALL WARRANTIES INCLUDING, WITHOUT LIMITATION, THE IMPLIED WARRANTIES OF MERCHANTABILITY, FITNESS FOR A PARTICULAR PURPOSE, AND NON-INFRINGEMENT OF THIRD PARTY RIGHTS.

PATENT INFORMATION

The products and applications illustrated herein (including transformer construction and circuits external to the products) may be covered by one or more U.S. and foreign patents, or potentially by pending U.S. and foreign patent applications assigned to Power Integrations. A complete list of Power Integrations' patents may be found at www.powerint.com. Power Integrations grants its customers a license under certain patent rights as set forth at http://www.powerint.com/ip.htm.

LIFE SUPPORT POLICY

POWER INTEGRATIONS' PRODUCTS ARE NOT AUTHORIZED FOR USE AS CRITICAL COMPONENTS IN LIFE SUPPORT DEVICES OR SYSTEMS WITHOUT THE EXPRESS WRITTEN APPROVAL OF THE PRESIDENT OF POWER INTEGRATIONS. As used herein:

1. A Life support device or system is one which, (i) is intended for surgical implant into the body, or (ii) supports or sustains life, and (iii) whose failure to perform, when properly used in accordance with instructions for use, can be reasonably expected to result in significant injury or death to the user.
2. A critical component is any component of a life support device or system whose failure to perform can be reasonably expected to cause the failure of the life support device or system, or to affect its safety or effectiveness.

The PI logo, ***TOPSwitch***, ***TinySwitch***, ***LinkSwitch***, ***DPA-Switch***, ***EcoSmart***, ***Clampless***, ***E-Shield***, ***Filterfuse***, ***PI Expert*** and ***PI FACTS*** are trademarks of Power Integrations, Inc. Other trademarks are property of their respective companies.
©Copyright 2006, Power Integrations, Inc.

Power Integrations Worldwide Sales Support Locations

WORLD HEADQUARTERS
5245 Hellyer Avenue
San Jose, CA 95138, USA.
Main: +1-408-414-9200
Customer Service:
Phone: +1-408-414-9665
Fax: +1-408-414-9765
e-mail: usasales@powerint.com

GERMANY
Rueckertstrasse 3
D-80336, Munich
Germany
Phone: +49-89-5527-3910
Fax: +49-89-5527-3920
e-mail: eurosales@powerint.com

JAPAN
Keihin Tatemono 1st Bldg 2-12-20
Shin-Yokohama, Kohoku-ku,
Yokohama-shi, Kanagawa ken,
Japan 222-0033
Phone: +81-45-471-1021
Fax: +81-45-471-3717
e-mail: japansales@powerint.com

TAIWAN
5F, No. 318, Nei Hu Rd., Sec. 1
Nei Hu Dist.
Taipei, Taiwan 114, R.O.C.
Phone: +886-2-2659-4570
Fax: +886-2-2659-4550
e-mail: taiwansales@powerint.com

CHINA (SHANGHAI)
Rm 807-808A
Pacheer Commercial Centre,
555 Nanjing Rd. West
Shanghai, P.R.C. 200041
Phone: +86-21-6215-5548
Fax: +86-21-6215-2468
e-mail: chinasales@powerint.com

INDIA
261/A, Ground Floor
7th Main, 17th Cross,
Sadashivanagar
Bangalore, India 560080
Phone: +91-80-5113-8020
Fax: +91-80-5113-8023
e-mail: indiasales@powerint.com

KOREA
RM 602, 6FL
Korea City Air Terminal B/D, 159-6
Samsung-Dong, Kangnam-Gu,
Seoul, 135-728, Korea
Phone: +82-2-2016-6610
Fax: +82-2-2016-6630
e-mail: koreasales@powerint.com

EUROPE HQ
1st Floor, St. James's House
East Street, Farnham
Surrey GU9 7TJ
United Kingdom
Phone: +44 (0) 1252-730-140
Fax: +44 (0) 1252-727-689
e-mail: eurosales@powerint.com

CHINA (SHENZHEN)
Rm 2206-2207, Block A,
Electronics Science & Technology Bldg.
2070 Shennan Zhong Rd.
Shenzhen, Guangdong,
China, 518031
Phone: +86-755-8379-3243
Fax: +86-755-8379-5828
e-mail: chinasales@powerint.com

ITALY
Via Vittorio Veneto 12
20091 Bresso MI
Italy
Phone: +39-028-928-6000
Fax: +39-028-928-6009
e-mail: eurosales@powerint.com

SINGAPORE
51 Newton Road
#15-08/10 Goldhill Plaza
Singapore, 308900
Phone: +65-6358-2160
Fax: +65-6358-2015
e-mail: singaporesales@powerint.com

APPLICATIONS HOTLINE
World Wide +1-408-414-9660

APPLICATIONS FAX
World Wide +1-408-414-9760

О компании

ООО "ТрейдЭлектроникс" - это оперативные поставки широкого спектра электронных компонентов отечественного и импортного производства напрямую от производителей и с крупнейших мировых складов. Реализуемая нашей компанией продукция насчитывает более полумиллиона наименований.

Благодаря этому наша компания предлагает к поставке практически не ограниченный ассортимент компонентов как оптовыми, мелкооптовыми партиями, так и в розницу.

Наличие собственной эффективной системы логистики обеспечивает надежную поставку продукции по конкурентным ценам в точно указанные сроки.

Срок поставки со стоков в **Европе и Америке – от 3 до 14 дней.**

Срок поставки из **Азии – от 10 дней.**

Благодаря развитой сети поставщиков, помогаем в поиске и приобретении экзотичных или снятых с производства компонентов.

Предоставляем спец цены на элементы для создания инженерных сэмплов.

Упорный труд, качественный результат дают нам право быть уверенными в себе и надежными для наших клиентов.

Наша компания это:

- Гарантия качества поставляемой продукции
- Широкий ассортимент
- Минимальные сроки поставок
- Техническая поддержка
- Подбор комплектации
- Индивидуальный подход
- Гибкое ценообразование

Наша организация особенно сильна в поставках модулей, микросхем, пассивных компонентов, ксайленсах (XC), EPF, EPM и силовой электроники.

Большой выбор предлагаемой продукции, различные виды оплаты и доставки, позволят Вам сэкономить время и получить максимум выгоды от сотрудничества с нами!

Trade Electronics.ru

гарантия бесперебойности производства и качества выпускаемой продукции

Перечень производителей, продукцию которых мы поставляем на российский рынок

AMD
ANALOG DEVICES
BOURNS
Coilcraft
élantec Semiconductor, Inc.
HARRIS
Infineon
JRC
MICREL
MOTOROLA
nichicon
PHILIPS
ROHM
SGS-THOMSON
Sipex
TAIYO YUDEN
TOKO
ZILOG
Winbond
Allegro
ATMEL
BURR - BROWN
EXAR
HITACHI
intel
Lattice
muRata
OKI
QUALCOMM
SAMSUNG
SHARP
SONY
TDK
TOSHIBA
KYOCERA
ALTERA
AVX
CITILYST
CYPRESS
FAIRCHILD SEMICONDUCTOR
HOLTEK
International IOR Rectifier
LINEAR TECHNOLOGY
MITSUBISHI
National Semiconductor
ON Semiconductor
REALTEK
SANYO
SHINDENGEN
SGS
TECCOR
TUNDRA
XILINX
Amphenol
Bay Linear
CIRRUS LOGIC
DALLAS
FUJITSU
IDT
intersil
MAXIM
molex
NEC
Panasonic
RENESAS
SII
SIEMENS
ST
Texas Instruments
VISHAY
ZETEX SEMICONDUCTORS

Trade Electronics.ru

гарантия бесперебойности производства и качества выпускаемой продукции

С удовольствием будем прорабатывать для Вас поставки всех необходимых компонентов по текущим запросам для скорейшего выявления групп элементов, по которым сотрудничество именно с нашей компанией будет для Вас максимально выгодным!

С уважением,

Менеджер отдела продаж ООО

«Трейд Электроникс»

Шишлаков Евгений

8 (495)668-30-28 доб 169

manager28@tradeelectronics.ru

http://www.tradeelectronics.ru/