3.3 V Supply, Voltage Output Temperature Sensor with Signal Conditioning

AD22103*

FEATURES
3.3 V, Single Supply Operation
Temperature Coefficient of 28 mV/°C
100°C Temperature Span (0°C to +100°C)
Accuracy Better Than 2.5% of Full Scale
Linearity Better Than 0.5% of Full Scale
Output Proportional to Temperature × V_S
Minimal Self-Heating
High Level, Low Impedance Output
Reverse Supply Protected

APPLICATIONS
Microprocessor Thermal Management
Battery and Low Powered Systems
Power Supply Temperature Monitoring
System Temperature Compensation
Board Level Temperature Sensing

MARKETS
Computers
Portable Electronic Equipment
Industrial Process Control
Instrumentation

SIMPLIFIED BLOCK DIAGRAM

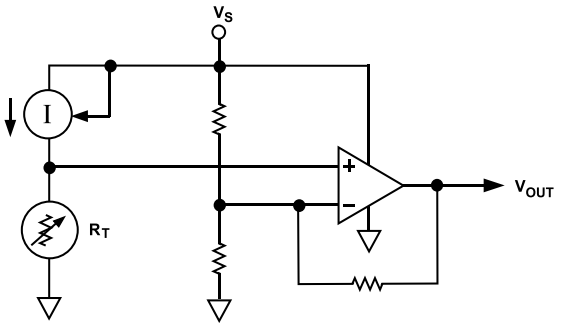

GENERAL DESCRIPTION

The AD22103 is a monolithic temperature sensor with on-chip signal conditioning. It can be operated over the temperature range 0°C to +100°C, making it ideal for use in numerous 3.3 V applications.

The signal conditioning eliminates the need for any trimming, buffering or linearization circuitry, greatly simplifying the system design and reducing the overall system cost.

The output voltage is proportional to the temperature times the supply voltage (ratiometric). The output swings from 0.25 V at 0°C to +3.05 V at +100°C using a single +3.3 V supply.

Due to its ratiometric nature, the AD22103 offers a cost effective solution when interfacing to an analog-to-digital converter. This is accomplished by using the ADC's power supply as a reference to both the ADC and the AD22103 (See Figure 1), eliminating the need for and cost of a precision reference.

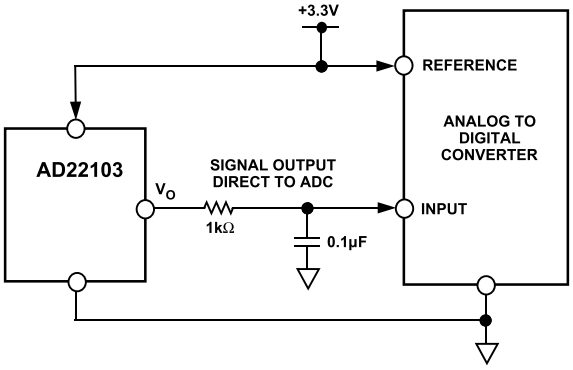

Figure 1. Application Circuit

*Protected by U.S. Patent No. 5243319.

REV. 0

Information furnished by Analog Devices is believed to be accurate and reliable. However, no responsibility is assumed by Analog Devices for its use, nor for any infringements of patents or other rights of third parties which may result from its use. No license is granted by implication or otherwise under any patent or patent rights of Analog Devices.

© Analog Devices, Inc., 1995

One Technology Way, P.O. Box 9106, Norwood. MA 02062-9106, U.S.A.
Tel: 617/329-4700 **Fax: 617/326-8703**

AD22103–SPECIFICATIONS (T_A = +25°C and V_S = +2.7 V to +3.6 V unless otherwise noted)

Parameter	AD22103K Min	Typ	Max	Units
TRANSFER FUNCTION	$V_{OUT} = (V_S/3.3\ V) \times [0.25\ V + (28\ mV/°C) \times T_A]$			V
TEMPERATURE COEFFICIENT		$(V_S/3.3\ V) \times 28$		mV/°C
TOTAL ERROR				
Initial Error				
T_A = +25°C		±0.5	±2.0	°C
Error over Temperature				
$T_A = T_{MIN}$ to T_{MAX}		±0.75	±2.5	°C
Nonlinearity				
$T_A = T_{MIN}$ to T_{MAX}		0.1	0.5	% FS[1]
OUTPUT CHARACTERISTICS				
Nominal Output Voltage				
V_S = 3.3 V, T_A = 0°C		0.25		V
V_S = 3.3 V, T_A = +25°C		0.95		V
V_S = 3.3 V, T_A = +100°C		3.05		V
POWER SUPPLY				
Operating Voltage	+2.7	+3.3	+3.6	V
Quiescent Current	350	500	600	µA
TEMPERATURE RANGE				
Guaranteed Temperature Range	0		+100	°C
Operating Temperature Range	0		+100	°C
PACKAGE		TO-92 SOIC		

NOTES
[1]FS (Full Scale) is defined as that of the operating temperature range, 0°C to +100°C. The listed max specification limit applies to the guaranteed temperature range. For example, the AD22103K has a nonlinearity of (0.5%) × (100°C) = 0.5°C over the guaranteed temperature range of 0°C to +100°C.

Specifications subject to change without notice.

CHIP SPECIFICATIONS (T_A = +25°C and V_S = +3.3 V unless otherwise noted)

Parameter	Min	Typ	Max	Units
TRANSFER FUNCTION	$V_{OUT} = (V_S/3.3\ V) \times [0.25\ V + (28\ mV/°C) \times T_A]$			V
TEMPERATURE COEFFICIENT		$(V_S/3.3\ V) \times 28$		mV/°C
OUTPUT CHARACTERISTICS				
Error				
T_A = +25°C		±0.5	Note 1	°C
Nominal Output Voltage				
T_A = +25°C		0.95		V
POWER SUPPLY				
Operating Voltage	+2.7	+3.3	+3.6	V
Quiescent Current	350	500	600	µA
TEMPERATURE RANGE				
Guaranteed Temperature Range		25		°C
Operating Temperature Range	0		+100	°C

NOTES
[1]Max specs cannot be guaranteed on chips, however, performance once assembled should be commensurate with the specifications listed in the top table.

Specifications subject to change without notice.

ABSOLUTE MAXIMUM RATINGS*

Supply Voltage . . . . . +10 V
Reversed Continuous Supply Voltage . . . . . –10 V
Operating Temperature . . . . . 0°C to +100°C
Storage Temperature . . . . . –65°C to +160°C
Output Short Circuit to V_S or Ground . . . . . Indefinite
Lead Temperature (Soldering, 10 sec) . . . . . +300°C

*Stresses above those listed under "Absolute Maximum Ratings" may cause permanent damage to the device. This is a stress rating only; the functional operation of the device at these or any other conditions above those indicated in the operation sections of this specification is not implied. Exposure to absolute maximum rating conditions for extended periods may affect device reliability.

ORDERING GUIDE

Model/Grade	Guaranteed Temperature Range	Package Description	Package Option
AD22103KT	0°C to +100°C	TO-92	TO-92
AD22103KR	0°C to +100°C	SOIC	SO-8
AD22103KChips*	+25°C	N/A	N/A

*Minimum purchase quantities of 100 pieces for all chip orders.

PIN DESCRIPTION

Mnemonic	Function
V_S	Power Supply Input
V_O	Device Output
GND	Ground Pin Must Be Connected to 0 V
NC	No Connect

PIN CONFIGURATIONS
TO-92

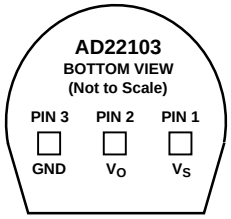

SOIC

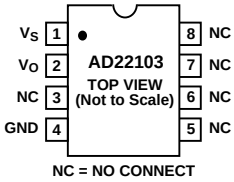

CAUTION

ESD (electrostatic discharge) sensitive device. Electrostatic charges as high as 4000 V readily accumulate on the human body and test equipment and can discharge without detection. Although the AD22103 features proprietary ESD protection circuitry, permanent damage may occur on devices subjected to high energy electrostatic discharges. Therefore, proper ESD precautions are recommended to avoid performance degradation or loss of functionality.

Typical Performance Curves

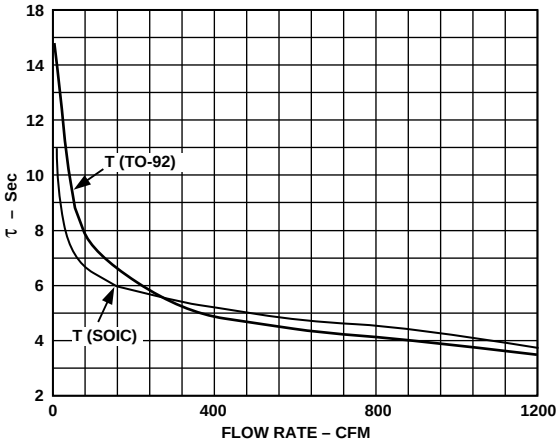

Figure 2. Thermal Response vs. Air Flow Rate

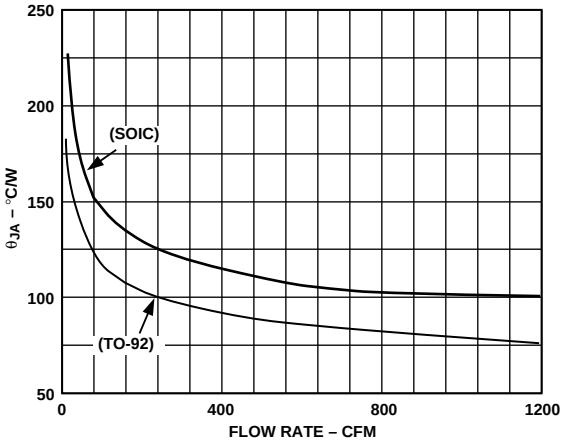

Figure 3. Thermal Resistance vs. Air Flow Rate

THEORY OF OPERATION

The AD22103 is a ratiometric temperature sensor IC whose output voltage is proportional to power supply voltage. The heart of the sensor is a proprietary temperature-dependent resistor, similar to an RTD, which is built into the IC. Figure 4 shows a simplified block diagram of the AD22103.

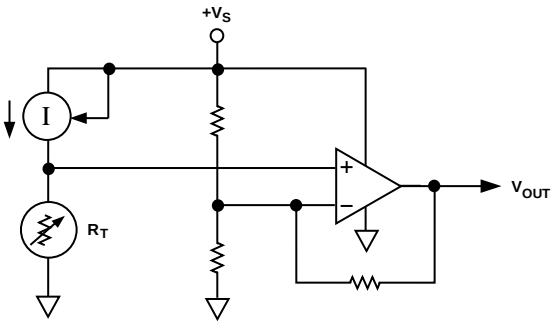

Figure 4. Simplified Block Diagram

The temperature-dependent resistor, labeled R_T, exhibits a change in resistance that is nearly linearly proportional to temperature. This resistor is excited with a current source that is proportional to power supply voltage. The resulting voltage across R_T is therefore both supply voltage proportional and linearly varying with temperature. The remainder of the AD22103 consists of an op amp signal conditioning block that takes the voltage across R_T and applies the proper gain and offset to achieve the following output voltage function:

$$V_{OUT} = (V_S/3.3\ V) \times [0.25\ V + (28.0\ mV/°C) \times T_A]$$

ABSOLUTE ACCURACY AND NONLINEARITY SPECIFICATIONS

Figure 5 graphically depicts the guaranteed limits of accuracy for the AD22103 and shows the performance of a typical part. As the output is very linear, the major sources of error are offset, i.e., error at room temperature, and span error, i.e., deviation from the theoretical 28.0 mV/°C. Demanding applications can achieve improved performance by calibrating these offset and gain errors so that only the residual nonlinearity remains as a source of error.

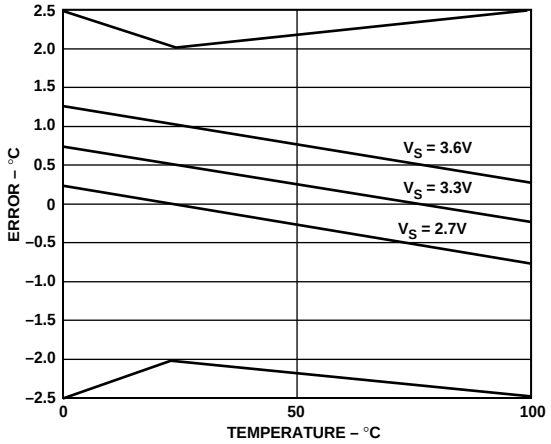

Figure 5. Typical AD22103 Performance

OUTPUT STAGE CONSIDERATIONS

As previously stated, the AD22103 is a voltage output device. A basic understanding of the nature of its output stage is useful for proper application. Note that at the nominal supply voltage of 3.3 V, the output voltage extends from 0.25 V at 0°C to +3.05 V at +100°C. Furthermore, the AD22103 output pin is capable of withstanding an indefinite short circuit to either ground or the power supply. These characteristics are provided by the output stage structure shown in Figure 6.

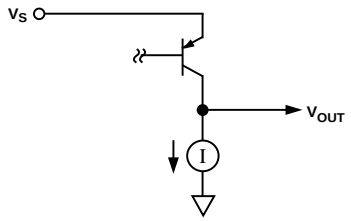

Figure 6. Output Stage Structure

The active portion of the output stage is a PNP transistor with its emitter connected to the V_S supply and collector connected to the output node. This PNP transistor sources the required amount of output current. A limited pull-down capability is provided by a fixed current sink of about –100 µA. (Here, "fixed" means the current sink is fairly insensitive to either supply voltage or output loading conditions. The current sink capability is a function of temperature, increasing its pull-down capability at lower temperatures.)

Due to its limited current sinking ability, the AD22103 is incapable of driving loads to the V_S power supply and is instead intended to drive grounded loads. A typical value for short circuit current limit is 7 mA, so devices can reliably source 1 mA or 2 mA. However, for best output voltage accuracy and minimal internal self-heating, output current should be kept below 1 mA. Loads connected to the V_S power supply should be avoided as the current sinking capability of the AD22103 is very limited. These considerations are typically not a problem when driving a microcontroller analog to digital converter input pin (see MICROPROCESSOR A/D INTERFACE ISSUES).

MOUNTING CONSIDERATIONS

If the AD22103 is thermally attached and properly protected, it can be used in any measuring situation where the maximum range of temperatures encountered is between 0°C and +100°C. Because plastic IC packaging technology is employed, excessive mechanical stress must be avoided when fastening the device with a clamp or screw-on heat tab. Thermally conductive epoxy or glue is recommended for typical mounting conditions. In wet or corrosive environments, an electrically isolated metal or ceramic well should be used to shield the AD22103. Because the part has a voltage output (as opposed to current), it offers modest immunity to leakage errors, such as those caused by condensation at low temperatures.

THERMAL ENVIRONMENT EFFECTS

The thermal environment in which the AD22103 is used determines two performance traits: the effect of self-heating on accuracy and the response time of the sensor to rapid changes in temperature. In the first case, a rise in the IC junction temperature above the ambient temperature is a function of two variables; the power consumption of the AD22103 and the thermal resistance between the chip and the ambient environment θ_{JA}. Self-heating error in degrees Celsius can be derived by multiplying the power dissipation by θ_{JA}. Because errors of this type can vary widely for surroundings with different heat sinking capacities, it is necessary to specify θ_{JA} under several conditions. Table I shows how the magnitude of self-heating error varies relative to the environment. A typical part will dissipate about 1.5 mW at room temperature with a 3.3 V supply and negligible output loading. In still air, without a "heat sink," the table below indicates a θ_{JA} of 190°C/W, yielding a temperature rise of 0.285°C. Thermal rise will be considerably less in either moving air or with direct physical connection to a solid (or liquid) body.

Table I. Thermal Resistance (TO-92)

Medium	θ_{JA} (°C/Watt)	τ (sec)*
Aluminum Block	60	2
Moving Air**		
Without Heat Sink	75	3.5
Still Air		
Without Heat Sink	190	15

*The time constant τ is defined as the time to reach 63.2% of the final temperature change.
**1200 CFM.

Response of the AD22103 output to abrupt changes in ambient temperature can be modeled by a single time constant τ exponential function. Figure 7 shows typical response time plots for a few media of interest.

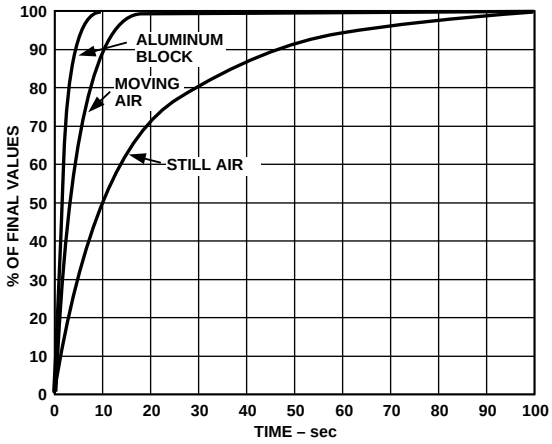

Figure 7. Response Time

The time constant τ is dependent on θ_{JA} and the specific heat capacities of the chip and the package. Table I lists the effective τ (time to reach 63.2% of the final value) for a few different media. Copper printed circuit board connections were neglected in the analysis; however, they will sink or conduct heat directly through the AD22103's solder plated copper leads. When faster response is required, a thermally conductive grease or glue between the AD22103 and the surface temperature being measured should be used.

MICROPROCESSOR A/D INTERFACE ISSUES

The AD22103 is especially well suited to providing a low cost temperature measurement capability for microprocessor/microcontroller based systems. Many inexpensive 8-bit microprocessors now offer an onboard 8-bit ADC capability at a modest cost premium. Total "cost of ownership" then becomes a function of the voltage reference and analog signal conditioning necessary to mate the analog sensor with the microprocessor ADC. The AD22103 can provide an ideal low cost system by eliminating the need for a precision voltage reference and any additional active components. The ratiometric nature of the AD22103 allows the microprocessor to use the same power supply as its ADC reference. Variations of hundreds of millivolts in the supply voltage have little effect as both the AD22103 and the ADC use the supply as their reference. The nominal AD22103 signal range of 0.25 V to 3.05 V (0°C to +100°C) makes good use of the input range of a 0 V to 3.3 V ADC. A single resistor and capacitor are recommended to provide immunity to the high speed charge dump glitches seen at many microprocessor ADC inputs (see Figure 1).

An 8-bit ADC with a reference of 3.3 V will have a least significant bit (LSB) size of 3.3 V/256 = 12.9 mV. This corresponds to a nominal resolution of about 0.46°C/bit.

USE WITH A PRECISION REFERENCE AS THE SUPPLY VOLTAGE

While the ratiometric nature of the AD22103 allows for system operation without a precision voltage reference, it can still be used in such systems. Overall system requirements involving other sensors or signal inputs may dictate the need for a fixed precision ADC reference. The AD22103 can be converted to absolute voltage operation by using a precision reference as the supply voltage. For example, a 3.3 V reference can be used to power the AD22103 directly. Supply current will typically be 500 µA which is usually within the output capability of the reference. A large number of AD22103s may require an additional op amp buffer, as would scaling down a 10.00 V reference that might be found in "instrumentation" ADCs typically operating from ±15 V supplies.

USING THE AD22103 WITH ALTERNATIVE SUPPLY VOLTAGES

Because of its ratiometric nature the AD22103 can be used at other supply voltages. Its nominal transfer function can be recalculated based on the new supply voltage. For instance, if using the AD22103 at V_S = 5 V the transfer function would be given by:

$$V_O = \frac{V_S}{5\,V}\left(0.25\,V + \frac{28\,mV}{°C} \times T_A\right)\frac{5\,V}{3.3\,V}$$

$$V_O = \frac{V_S}{5\,V}\left(0.378\,V + \frac{42.42\,mV}{°C} \times T_A\right)$$

OUTLINE DIMENSIONS

Dimensions shown in inches and (mm).

TO-92

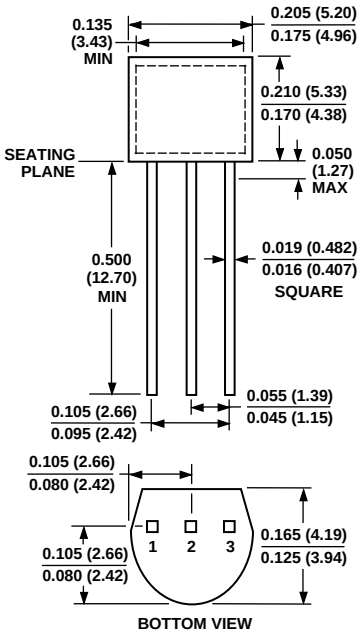

SO-8 (SOIC)

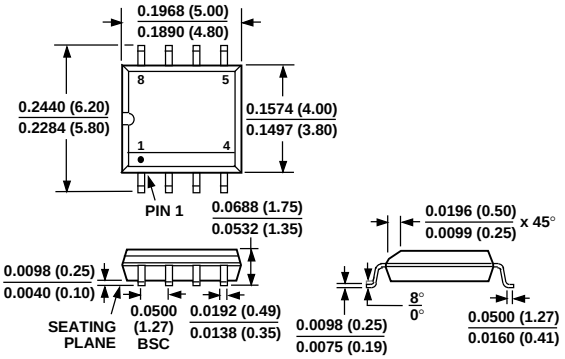

C2006–18–3/95

PRINTED IN U.S.A.

О компании

ООО "ТрейдЭлектроникс" - это оперативные поставки широкого спектра электронных компонентов отечественного и импортного производства напрямую от производителей и с крупнейших мировых складов. Реализуемая нашей компанией продукция насчитывает более полумиллиона наименований.

Благодаря этому наша компания предлагает к поставке практически не ограниченный ассортимент компонентов как оптовыми, мелкооптовыми партиями, так и в розницу.

Наличие собственной эффективной системы логистики обеспечивает надежную поставку продукции по конкурентным ценам в точно указанные сроки.

Срок поставки со стоков в **Европе и Америке – от 3 до 14 дней.**

Срок поставки из **Азии – от 10 дней.**

Благодаря развитой сети поставщиков, помогаем в поиске и приобретении экзотичных или снятых с производства компонентов.

Предоставляем спец цены на элементы для создания инженерных сэмплов.

Упорный труд, качественный результат дают нам право быть уверенными в себе и надежными для наших клиентов.

Наша компания это:

- Гарантия качества поставляемой продукции
- Широкий ассортимент
- Минимальные сроки поставок
- Техническая поддержка
- Подбор комплектации
- Индивидуальный подход
- Гибкое ценообразование

Наша организация особенно сильна в поставках модулей, микросхем, пассивных компонентов, ксайленсах (XC), EPF, EPM и силовой электроники.

Большой выбор предлагаемой продукции, различные виды оплаты и доставки, позволят Вам сэкономить время и получить максимум выгоды от сотрудничества с нами!

Trade Electronics.ru

гарантия бесперебойности производства и качества выпускаемой продукции

Перечень производителей, продукцию которых мы поставляем на российский рынок

AMD
ANALOG DEVICES
BOURNS
Coilcraft
élantec Semiconductor, Inc.
HARRIS
Infineon
JRC
MICREL
MOTOROLA
nichicon
PHILIPS
ROHM
SGS-THOMSON
Sipex
TAIYO YUDEN
TOKO
ZILOG
Winbond
Allegro
ATMEL
BURR - BROWN
EXAR
HITACHI
intel
Lattice
muRata
OKI
QUALCOMM
SAMSUNG
SHARP
SONY
TDK
TOSHIBA
KYOCERA
ALTERA
AVX
CITILYST
CYPRESS
FAIRCHILD SEMICONDUCTOR
HOLTEK
International IOR Rectifier
LINEAR TECHNOLOGY
MITSUBISHI
National Semiconductor
ON Semiconductor
REALTEK
SANYO
SHINDENGEN
SGS
TECCOR
TUNDRA
XILINX
Amphenol
Bay Linear
CIRRUS LOGIC
DALLAS
FUJITSU
IDT
intersil
MAXIM
molex
NEC
Panasonic
RENESAS
SII
SIEMENS
ST
Texas Instruments
VISHAY
ZETEX SEMICONDUCTORS

Trade Electronics.ru

гарантия бесперебойности производства и качества выпускаемой продукции

С удовольствием будем прорабатывать для Вас поставки всех необходимых компонентов по текущим запросам для скорейшего выявления групп элементов, по которым сотрудничество именно с нашей компанией будет для Вас максимально выгодным!

С уважением,

Менеджер отдела продаж ООО

«Трейд Электроникс»

Шишлаков Евгений

8 (495)668-30-28 доб 169

manager28@tradeelectronics.ru

http://www.tradeelectronics.ru/