Dual Common-Cathode Ultrafast Plastic Rectifier

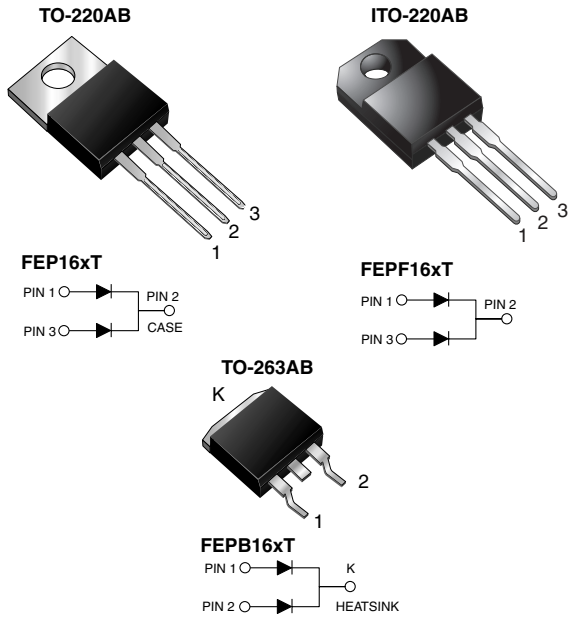

FEATURES

- Glass passivated chip junction
- Ultrafast recovery time
- Low switching losses, high efficiency
- High forward surge capability
- AEC Q101 qualified
- Meets MSL level 1, per J-STD-020, LF maximum peak of 245 °C (for TO-263AB package)
- Solder dip 260 °C, 40 s (for TO-220AB and ITO-220AB package)
- Component in accordance to RoHS 2002/95/EC and WEEE 2002/96/EC

RoHS COMPLIANT

TYPICAL APPLICATIONS

For use in high frequency rectifier of switching mode power supplies, inverters, freewheeling diodes, dc-to-dc converters, and other power switching application.

PRIMARY CHARACTERISTICS	
$I_{F(AV)}$	8.0 A x 2
V_{RRM}	50 V to 600 V
I_{FSM}	200 A, 125 A
t_{rr}	35 ns, 50 ns
V_F	0.95 V, 1.30 V, 1.50 V
T_J max.	150 °C

MECHANICAL DATA

Case: TO-220AB, ITO-220AB, TO-263AB

Epoxy meets UL 94V-0 flammability rating

Terminals: Matte tin plated leads, solderable per J-STD-002 and JESD22-B102

E3 suffix for consumer grade, meets JESD 201 class 1A whisker test, HE3 suffix for high reliability grade (AEC Q101 qualified), meets JESD 201 class 2 whisker test

Polarity: As marked

Mounting Torque: 10 in-lbs maximum

MAXIMUM RATINGS (T_C = 25 °C unless otherwise noted)

PARAMETER	SYMBOL	FEP 16AT	FEP 16BT	FEP 16CT	FEP 16DT	FEP 16FT	FEP 16GT	FEP 16HT	FEP 16JT	UNIT
Maximum repetitive peak reverse voltage	V_{RRM}	50	100	150	200	300	400	500	600	V
Maximum RMS voltage	V_{RMS}	35	70	105	140	210	280	350	420	V
Maximum DC blocking voltage	V_{DC}	50	100	150	200	300	400	500	600	V
Maximum average forward rectified current at T_C = 100 °C	$I_{F(AV)}$	16								A
Peak forward surge current 8.3 ms single half sine-wave superimposed on rated load per diode	I_{FSM}	200				125				A
Operating storage and temperature range	T_J, T_{STG}	- 55 to +150								°C
Isolation voltage (ITO-220AB only) from terminal to heatsink t = 1 min	V_{AC}	1500								V

ELECTRICAL CHARACTERISTICS (T_C = 25 °C unless otherwise noted)												
PARAMETER	TEST CONDITIONS		SYMBOL	FEP 16AT	FEP 16BT	FEP 16CT	FEP 16DT	FEP 16FT	FEP 16GT	FEP 16HT	FEP 16JT	UNIT
Maximum instantaneous forward voltage per diode (1)	8.0 A		V_F	0.95				1.30		1.50		V
Maximum DC reverse current per diode at rated DC blocking voltage		T_C = 25 °C T_C = 100 °C	I_R	10 500								µA
Maximum reverse recovery time per diode	I_F = 0.5 A, I_R = 1.0 A, I_{rr} = 0.25 A		t_{rr}	35				50				ns
Typical junction capacitance per diode	4.0 V, 1 MHz		C_J	85						60		pF

Note:

(1) Pulse test: 300 µs pulse width, 1 % duty cycle

THERMAL CHARACTERISTICS (T_C = 25 °C unless otherwise noted)					
PARAMETER	SYMBOL	FEP	FEPF	FEPB	UNIT
Typical thermal resistance from junction to case per diode	$R_{\theta JC}$	2.2	3.1	2.2	°C/W

ORDERING INFORMATION (Example)					
PACKAGE	PREFERRED P/N	UNIT WEIGHT (g)	PACKAGE CODE	BASE QUANTITY	DELIVERY MODE
TO-220AB	FEP16JT-E3/45	1.85	45	50/tube	Tube
ITO-220AB	FEPF16JT-E3/45	1.97	45	50/tube	Tube
TO-263AB	FEPB16JT-E3/45	1.35	45	50/tube	Tube
TO-263AB	FEPB16JT-E3/81	1.35	81	800/reel	Tape and reel
TO-220AB	FEP16JTHE3/45 (1)	1.85	45	50/tube	Tube
ITO-220AB	FEPF16JTHE3/45 (1)	1.97	45	50/tube	Tube
TO-263AB	FEPB16JTHE3/45 (1)	1.35	45	50/tube	Tube
TO-263AB	FEPB16JTHE3/81 (1)	1.35	81	800/reel	Tape and reel

Note:

(1) Automotive grade AEC Q101 qualified

RATINGS AND CHARACTERISTICS CURVES

(T_A = 25 °C unless otherwise noted)

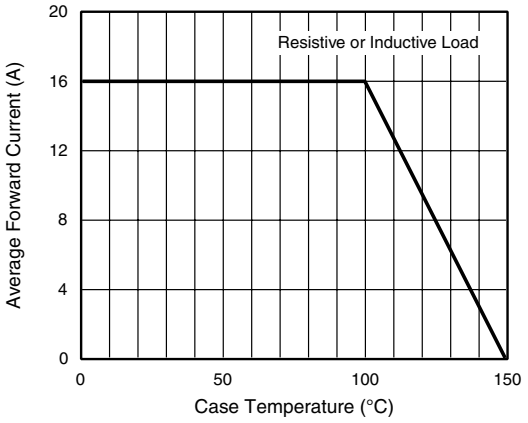

Figure 1. Forward Current Derating Curve

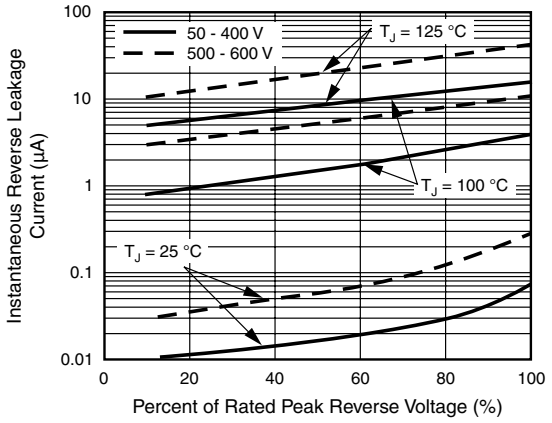

Figure 4. Typical Reverse Characteristics Per Diode

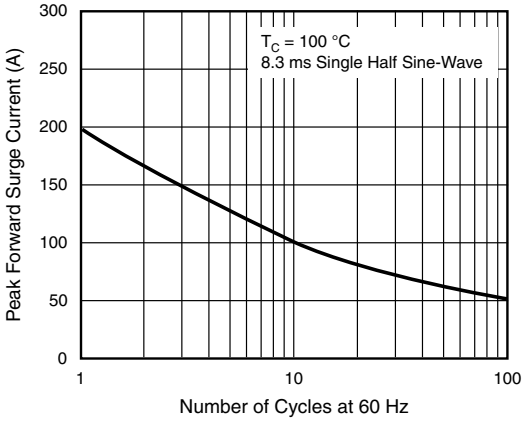

Figure 2. Maximum Non-Repetitive Peak Forward Surge Current Per Diode

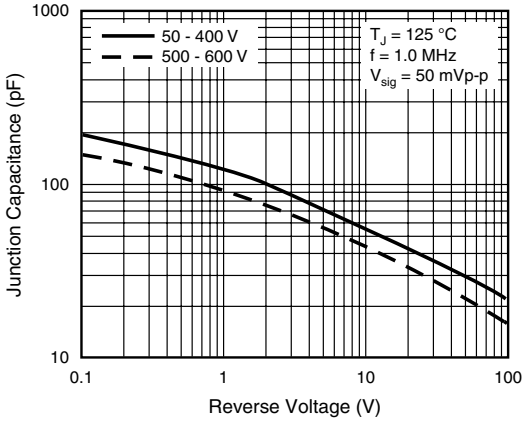

Figure 5. Typical Junction Capacitance Per Diode

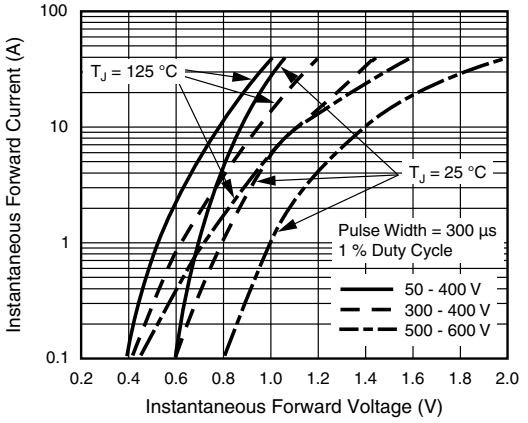

Figure 3. Typical Instantaneous Forward Characteristics Per Diode

PACKAGE OUTLINE DIMENSIONS in inches (millimeters)

TO-220AB

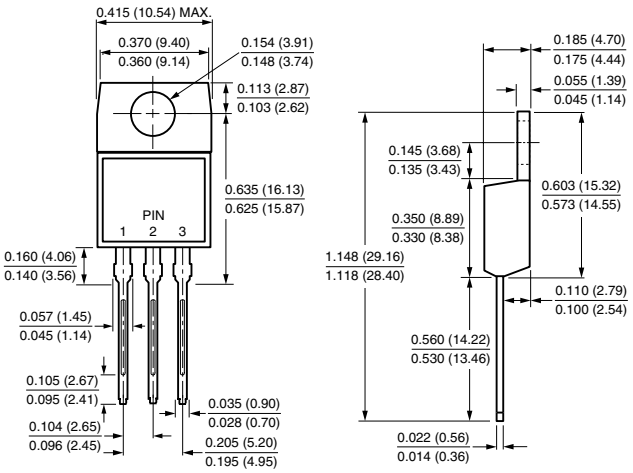

ITO-220AB

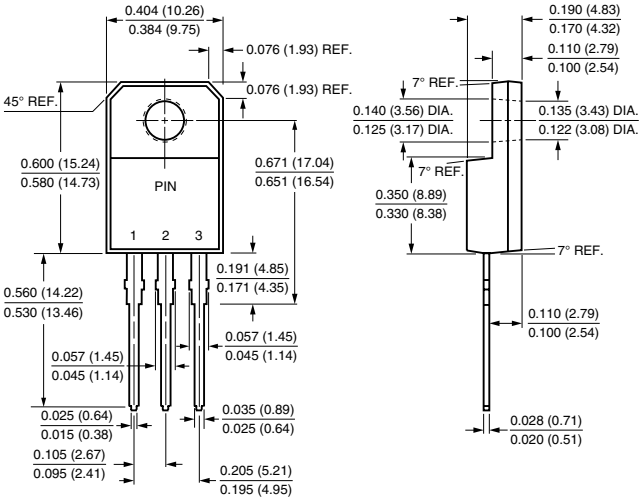

TO-263AB

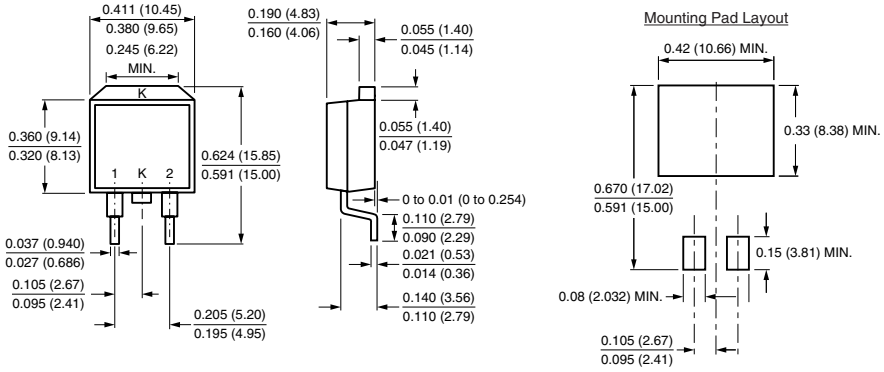

Disclaimer

ALL PRODUCT, PRODUCT SPECIFICATIONS AND DATA ARE SUBJECT TO CHANGE WITHOUT NOTICE TO IMPROVE RELIABILITY, FUNCTION OR DESIGN OR OTHERWISE.

Vishay Intertechnology, Inc., its affiliates, agents, and employees, and all persons acting on its or their behalf (collectively, "Vishay"), disclaim any and all liability for any errors, inaccuracies or incompleteness contained in any datasheet or in any other disclosure relating to any product.

Vishay makes no warranty, representation or guarantee regarding the suitability of the products for any particular purpose or the continuing production of any product. To the maximum extent permitted by applicable law, Vishay disclaims (i) any and all liability arising out of the application or use of any product, (ii) any and all liability, including without limitation special, consequential or incidental damages, and (iii) any and all implied warranties, including warranties of fitness for particular purpose, non-infringement and merchantability.

Statements regarding the suitability of products for certain types of applications are based on Vishay's knowledge of typical requirements that are often placed on Vishay products in generic applications. Such statements are not binding statements about the suitability of products for a particular application. It is the customer's responsibility to validate that a particular product with the properties described in the product specification is suitable for use in a particular application. Parameters provided in datasheets and/or specifications may vary in different applications and performance may vary over time. All operating parameters, including typical parameters, must be validated for each customer application by the customer's technical experts. Product specifications do not expand or otherwise modify Vishay's terms and conditions of purchase, including but not limited to the warranty expressed therein.

Except as expressly indicated in writing, Vishay products are not designed for use in medical, life-saving, or life-sustaining applications or for any other application in which the failure of the Vishay product could result in personal injury or death. Customers using or selling Vishay products not expressly indicated for use in such applications do so at their own risk and agree to fully indemnify and hold Vishay and its distributors harmless from and against any and all claims, liabilities, expenses and damages arising or resulting in connection with such use or sale, including attorneys fees, even if such claim alleges that Vishay or its distributor was negligent regarding the design or manufacture of the part. Please contact authorized Vishay personnel to obtain written terms and conditions regarding products designed for such applications.

No license, express or implied, by estoppel or otherwise, to any intellectual property rights is granted by this document or by any conduct of Vishay. Product names and markings noted herein may be trademarks of their respective owners.

Material Category Policy

Vishay Intertechnology, Inc. hereby certifies that all its products that are identified as RoHS-Compliant fulfill the definitions and restrictions defined under Directive 2011/65/EU of The European Parliament and of the Council of June 8, 2011 on the restriction of the use of certain hazardous substances in electrical and electronic equipment (EEE) - recast, unless otherwise specified as non-compliant.

Please note that some Vishay documentation may still make reference to RoHS Directive 2002/95/EC. We confirm that all the products identified as being compliant to Directive 2002/95/EC conform to Directive 2011/65/EU.

О компании

ООО "ТрейдЭлектроникс" - это оперативные поставки широкого спектра электронных компонентов отечественного и импортного производства напрямую от производителей и с крупнейших мировых складов. Реализуемая нашей компанией продукция насчитывает более полумиллиона наименований.

Благодаря этому наша компания предлагает к поставке практически не ограниченный ассортимент компонентов как оптовыми, мелкооптовыми партиями, так и в розницу.

Наличие собственной эффективной системы логистики обеспечивает надежную поставку продукции по конкурентным ценам в точно указанные сроки.

Срок поставки со стоков в **Европе и Америке – от 3 до 14 дней.**

Срок поставки из **Азии – от 10 дней.**

Благодаря развитой сети поставщиков, помогаем в поиске и приобретении экзотичных или снятых с производства компонентов.

Предоставляем спец цены на элементы для создания инженерных сэмплов.

Упорный труд, качественный результат дают нам право быть уверенными в себе и надежными для наших клиентов.

Наша компания это:

- Гарантия качества поставляемой продукции
- Широкий ассортимент
- Минимальные сроки поставок
- Техническая поддержка
- Подбор комплектации
- Индивидуальный подход
- Гибкое ценообразование

Наша организация особенно сильна в поставках модулей, микросхем, пассивных компонентов, ксайленсах (XC), EPF, EPM и силовой электроники.

Большой выбор предлагаемой продукции, различные виды оплаты и доставки, позволят Вам сэкономить время и получить максимум выгоды от сотрудничества с нами!

Trade Electronics.ru

гарантия бесперебойности производства и качества выпускаемой продукции

Перечень производителей, продукцию которых мы поставляем на российский рынок

AMD
ANALOG DEVICES
BOURNS
Coilcraft
élantec Semiconductor, Inc.
HARRIS
Infineon
JRC
MICREL
MOTOROLA
nichicon
PHILIPS
ROHM
SGS-THOMSON
Sipex
TAIYO YUDEN
TOKO
ZILOG
Winbond
Allegro
ATMEL
BURR - BROWN
EXAR
HITACHI
intel
Lattice
muRata
OKI
QUALCOMM
SAMSUNG
SHARP
SONY
TDK
TOSHIBA
KYOCERA
ALTERA
AVX
CITILYST
CYPRESS
FAIRCHILD SEMICONDUCTOR
HOLTEK
International IOR Rectifier
LINEAR TECHNOLOGY
MITSUBISHI
National Semiconductor
ON Semiconductor
REALTEK
SANYO
SHINDENGEN
SGS
TECCOR
TUNDRA
XILINX
Amphenol
Bay Linear
CIRRUS LOGIC
DALLAS
FUJITSU
IDT
intersil
MAXIM
molex
NEC
Panasonic
RENESAS
SII
SIEMENS
ST
Texas Instruments
VISHAY
ZETEX SEMICONDUCTORS

Trade Electronics.ru

гарантия бесперебойности производства и качества выпускаемой продукции

С удовольствием будем прорабатывать для Вас поставки всех необходимых компонентов по текущим запросам для скорейшего выявления групп элементов, по которым сотрудничество именно с нашей компанией будет для Вас максимально выгодным!

С уважением,

Менеджер отдела продаж ООО

«Трейд Электроникс»

Шишлаков Евгений

8 (495)668-30-28 доб 169

manager28@tradeelectronics.ru

http://www.tradeelectronics.ru/