● Part Numbering

CERALOCK® (MHz)

(Part Number) **CS** **T** **CE** **16M0** **V53** ******* **-R0**
❶ ❷ ❸ ❹ ❺ ❻ ❼

❶Product ID

Product ID	
CS	Ceramic Resonators

❷Frequency/Capacitance

Code	Frequency/Capacitance
A	MHz No capacitance built-in
T	MHz Built-in Capacitance

❸Structure/Size

Code	Structure/Size
LS	Round Lead Type
CC	Cap Chip Type
CR/CE/CG	Small-cap Chip Type
CV	Monolithic Chip Type
CW	Small Monolithic Chip Type

❹Nominal Center Frequency

Expressed by four-digit alphanumerics. The unit is in hertz (Hz). Decimal point is expressed by capital letter "**M**".

❺Design

Code	Design
G□□	Thickness Shear mode
T/V□□	Thickness Expander mode
X□□	Thickness Expander mode (3rd overtone)

□□ indicates initial frequency tolerance and load capacity.

❻Individual Specification

Code	Individual Specification
*******	Three-digit alphanumerics express "Individual Specification".

With standard products, "❻Individual Specification" is omitted, and "❼Package Specification Code" is carried up.

❼Packaging

Code	Packaging
-B0	Bulk
-A0	Radial Taping H_0=18mm
-R0	Plastic Taping ø=180mm
-R1	Plastic Taping ø=330mm

Radial taping is applied to lead type and plastic taping to chip type.

CERALOCK® (kHz)

(Part Number) **CS** **B** **FB** **500K** **J58** ******* **-R1**
❶ ❷ ❸ ❹ ❺ ❻ ❼

❶Product ID

Product ID	
CS	Ceramic Resonators

❷Frequency/Capacitance

Code	Frequency/Capacitance
B	kHz No capacitance built-in

❸Structure/Size

Code	Structure/Size
LA	Two-Terminal Lead Type
FB	SMD Type

❹Nominal Center Frequency

Expressed by four-digit alphanumerics. The unit is in hertz (Hz). Capital letter "**K**" following three figures expresses the unit of "kHz". In case of 1.0MHz (1000kHz) or above, expressed by three figures and capital letter "**M**" for decimal point.

❺Design

Code	Design
E□□	Area Expansion mode
J□□	Area Expansion mode (Closed Type)

□□ indicates initial frequency tolerance and load capacitance.

❻Individual Specification

Code	Individual Specification
*******	Three-digit alphanumerics express "Individual Specification".

With standard products, "❻Individual Specification" is omitted, and "❼Package Specification Code" is carried up.

❼Packaging

Code	Packaging
-B0	Bulk
-R1	Plastic Taping ø=330mm

Ceramic Resonators (CERALOCK®)

Chip Type Three Terminals CSTCC/R/E/G/V/W Series

Chip "CERALOCK" with built-in load capacitance in an extremely small package.
MURATA's package technology expertise has enabled the development of the Chip "CERALOCK" with built-in load capacitors.
High-density mounting can be realized because of the small package and the elimination of the need for an external load capacitor.

■ Features

1. Oscillation circuits do not require external load capacitors.
2. The series is available in a wide frequency range.
3. The resonators are extremely small and have a low profile.
4. No adjustment is necessary for oscillation circuits.

■ Applicatons

1. Clock oscillators for microprocessors
2. Electronic control circuits for small electronic equipment such as hand held video camera
3. Audio-visual applications (Camcorder, Remote Controller, etc.)
4. Office automation equipments (DVD, CD-ROM, HDD, FDD, etc.)
5. Automotive electronics (CSTCC_G_A series, CSTCR_G_B series, CSTCE_G_A series, CSTCE_V_A series, CSTCV_X_Q series)
6. Dual Tone Multi Frequency (DTMF) generator for cordless telephones

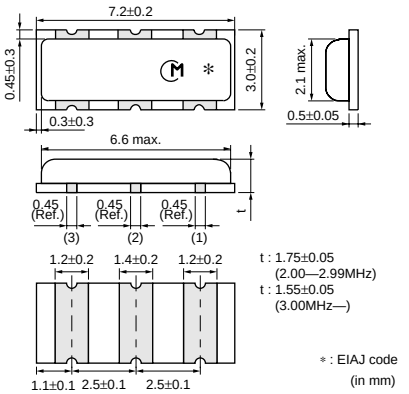

CSTCC_G(_A)
2.00-3.99MHz

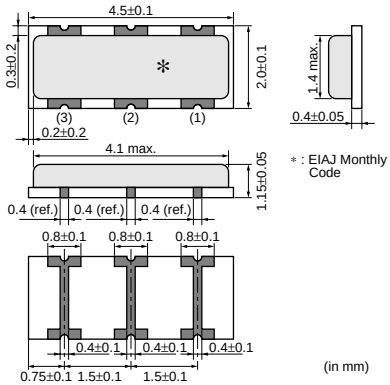

CSTCR_G(_B)
4.00-7.99MHz

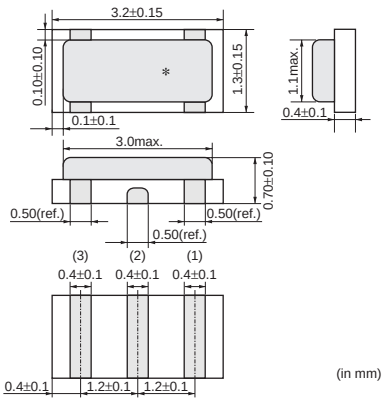

CSTCE_G(_A)
8.00-12.50MHz

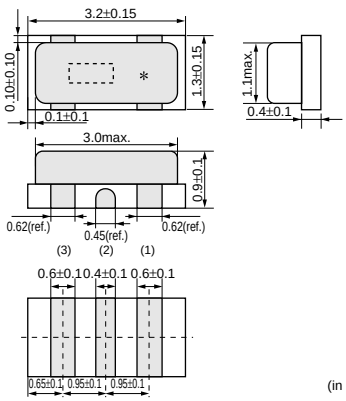

CSTCE_V(_A)
12.51-20.00MHz

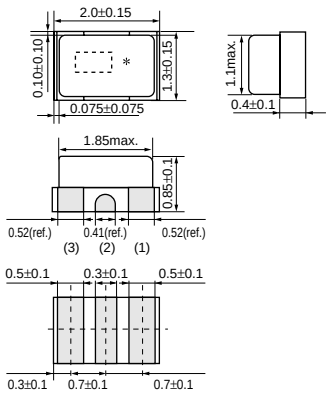

CSTCG_V
20.00-33.86MHz
(Ultra small)

Continued on the following page.

Continued from the preceding page.

CSTCV_X_Q
20.01-70.00MHz

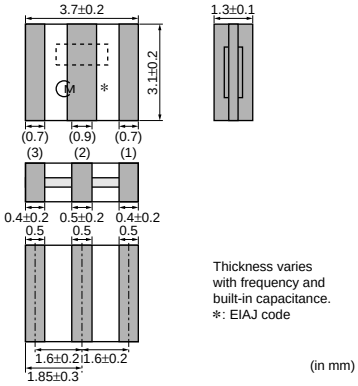

CSTCW_X
20.01-70.00MHz

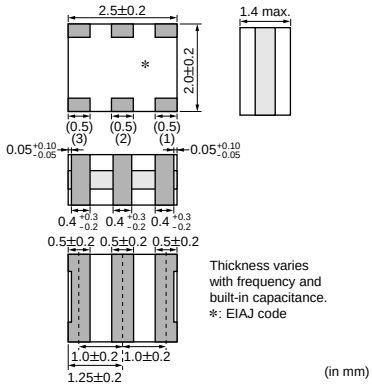

Part Number	Oscillating Frequency (MHz)	Initial Tolerance (%)	Temp. Stability (%)	Temperature Range (°C)	Use
CSTCC_G	2.00 to 3.99	±0.5	±0.3 [±0.4%:Built-in Capacitance 47pF type within Freq.2.00 to 3.49MHz]	-20 to +80	For consumer electronics
CSTCC_G_A	2.00 to 3.99	±0.5	±0.4 [-0.6% to +0.3%:Built-in Capacitance 47pF type within Freq.2.00 to 3.49MHz]	-40 to +125	For automotive electronics
CSTCR_G	4.00 to 7.99	±0.5	±0.2	-20 to +80	For consumer electronics
CSTCR_G_B	4.00 to 7.99	±0.5	±0.15	-40 to +125	For automotive electronics
CSTCE_G	8.00 to 12.50	±0.5	±0.2	-20 to +80	For consumer electronics
CSTCE_G_A	8.00 to 12.50	±0.5	±0.2	-40 to +125	For automotive electronics
CSTCE_V	12.51 to 20.00	±0.5	±0.3	-20 to +80	For consumer electronics
CSTCE_V_A	12.51 to 20.00	±0.5	±0.3	-40 to +125	For automotive electronics
CSTCG_V	20.00 to 33.86	±0.5	±0.3	-20 to +80	For consumer electronics
CSTCV_X_Q	20.01 to 70.00	±0.5	±0.3	-40 to +125	For automotive electronics
CSTCW_X	20.01 to 70.00	±0.5	±0.2	-20 to +80	For consumer electronics

Irregular or stop oscillation may occur under unmatched circuit conditions. Please check the actual conditions prior to use.

■ Oscillation Frequency Measuring Circuit

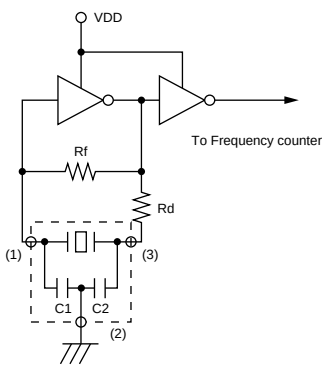

■ Standard Land Pattern Dimensions

CSTCC_G(_A)

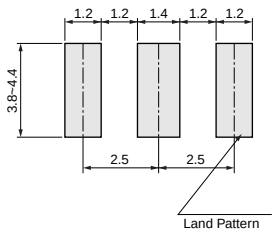

(in mm)

CSTCR_G(_B)

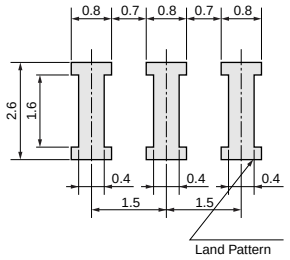

(in mm)

CSTCE_G(_A)

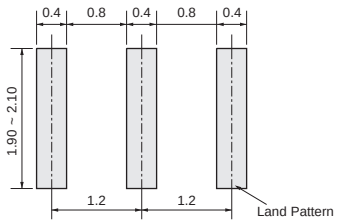

(in mm)

CSTCE_V(_A)

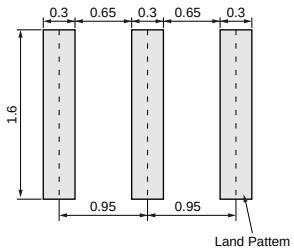

(in mm)

CSTCG_V

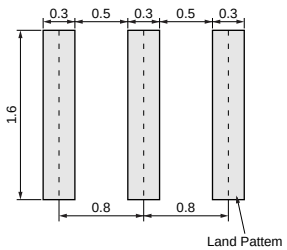

(in mm)

CSTCV_X_Q

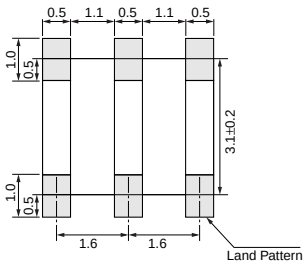

(in mm)

CSTCW_X

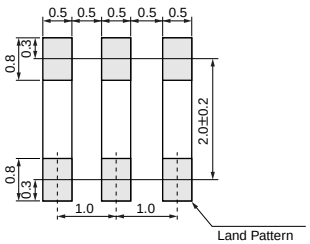

(in mm)

■ Oscillation Frequency Temperature Stability

CSTCC_G

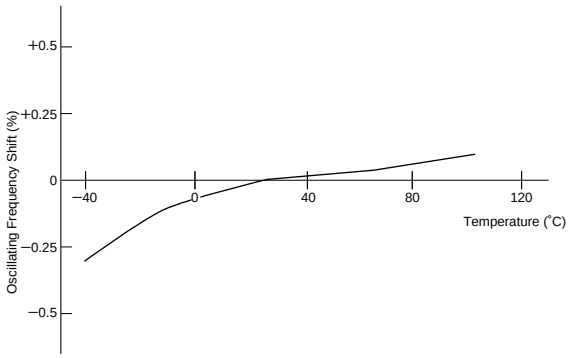

CSTCC_G_A

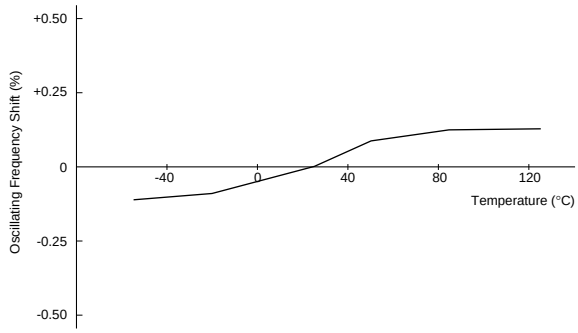

CSTCR_G(_B)

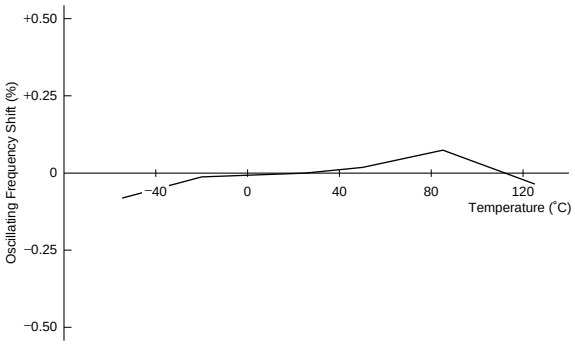

CSTCE_G(_A)

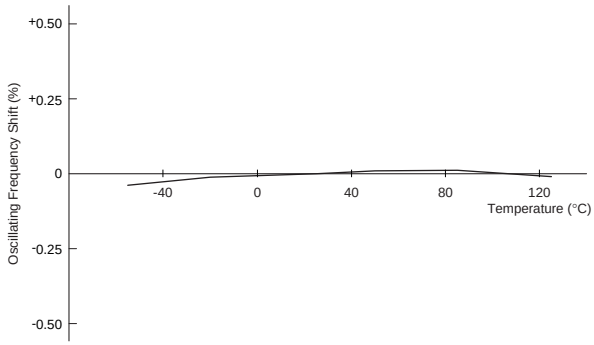

CSTCE_V(_A)

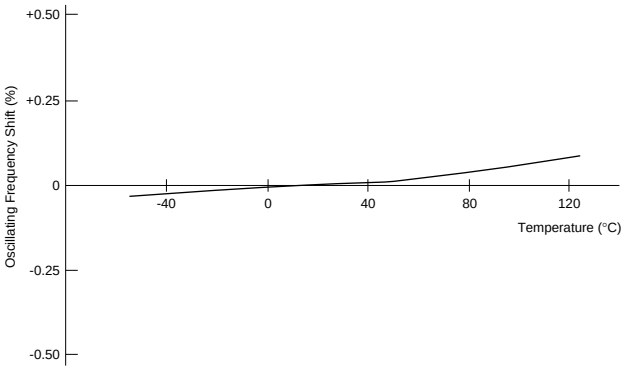

CSTCG_V

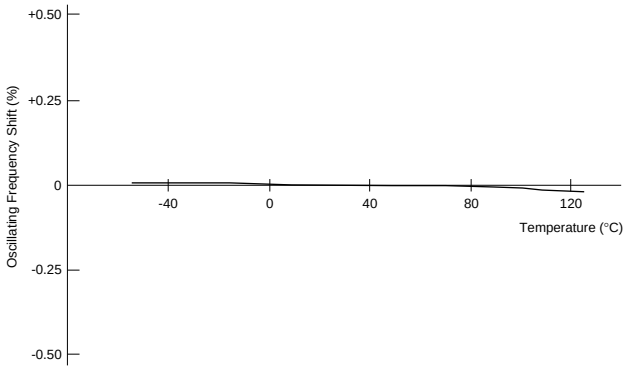

CSTCV_X_Q

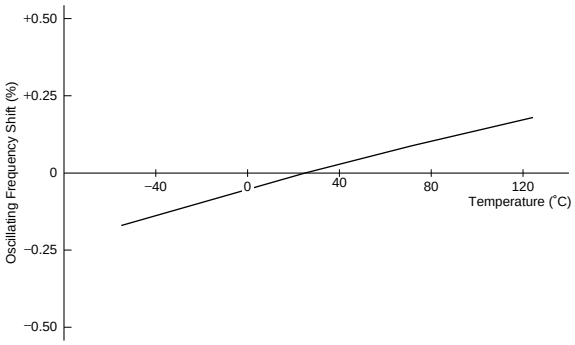

CSTCW_X

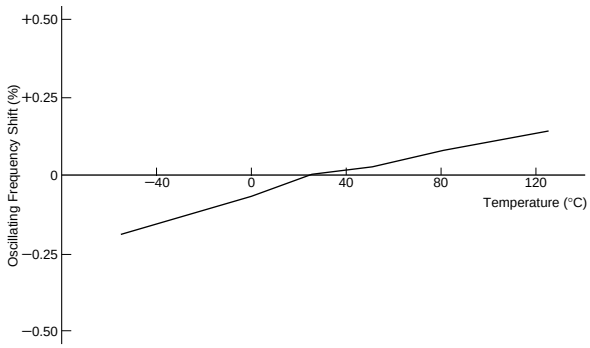

Ceramic Resonators (CERALOCK®)

Chip Type Two Terminals CSACV/W Series

A wide range of chip "CERALOCK" is now available. This diverse series owes its development to MURATA's package technology expertise and original mass production techniques. It enables high-density mounting and further miniaturization of electronic equipment.

■ Features

1. The series is available in a wide frequency range.
2. The resonators are extremely small and have a low profile (CSACW series).
3. No adjustment is necessary for oscillation circuits.

■ Applications

1. Clock oscillators for microprocessors
2. Electronic control circuits for small electronic equipment
3. Automotive electronics (CSACV_X_Q series)

CSACV_X_Q
20.01-70.00MHz

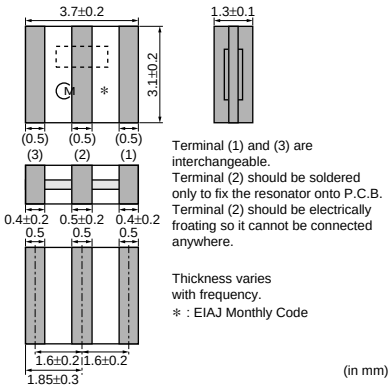

CSACW_X
20.01-70.00MHz

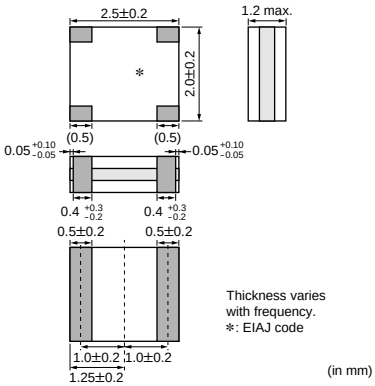

Part Number	Oscillating Frequency (MHz)	Initial Tolerance (%)	Temp. Stability (%)	Temperature Range (°C)	Use
CSACV_X_Q	20.01 to 70.00	±0.5	±0.3	-40 to +125	For automotive electronics
CSACW_X	20.01 to 70.00	±0.5	±0.2	-20 to +80	For consumer electronics

Irregular or stop oscillation may occur under unmatched circuit conditions. Please check the actual conditions prior to use.

■ Oscillation Frequency Measuring Circuit

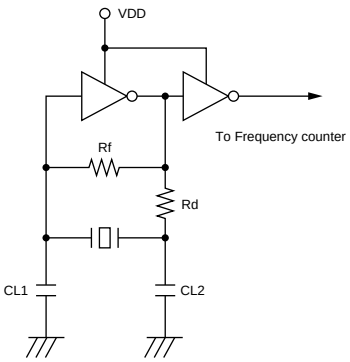

■ Standard Land Pattern Dimensions

CSACV_X_Q

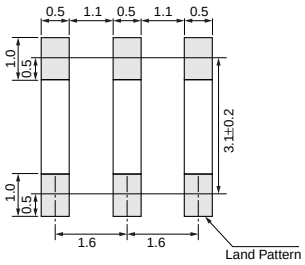

(in mm)

CSACW_X

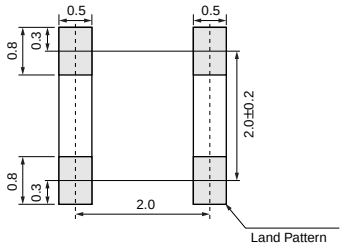

(in mm)

■ Oscillation Frequency Temperature Stability

CSACV_X_Q

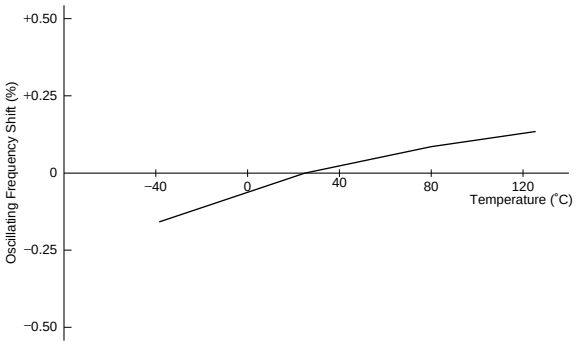

CSACW_X

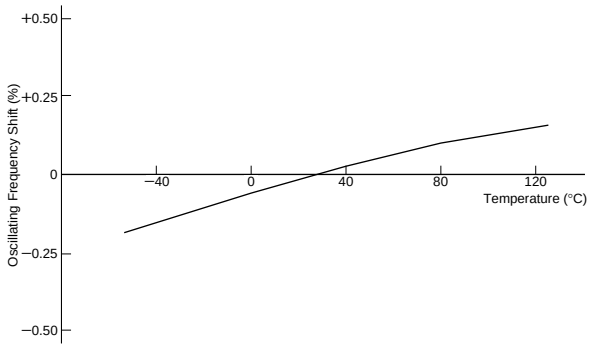

MHz Chip Type Notice (Soldering and Mounting)

1. Soldering Conditions

(1) Reflow

One heat stress, shown in the profile at right, is applied to resonator; then, after being placed in natural conditions for 1 hour, the resonator is measured.

1. Pre-heating conditions should be +140 to +160°C for 60 to 120 seconds. Ascending time up to +150°C should be longer than 30 seconds.
2. Heating conditions should be within 20 seconds at +230°C min., but peak temperature should be lower than +240°C.

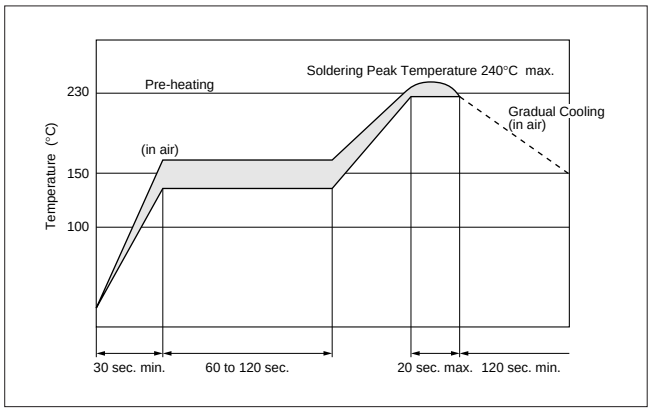

(2) Soldering Iron

Soldering iron of +270±5°C should be placed 0.5mm above electrode of resonator. Melting solder through soldering iron should be applied to electrode for 3±1 seconds; then, after being placed in natural conditions for 24 hour, the resonator should be measured.

2. Wash

Some series do not withstand washing.
Please check the list at right before use.

Series	Wash
CSTCC (Except 2.00 - 3.49MHz)	Available
CSTCV	Available
CSACV	Available
CSTCR	Not Available
CSTCC (Only 2.00 - 3.49MHz)	Not Available
CSTCW	Not Available
CSACW	Not Available
CSTCE	Not Available
CSTCG	Not Available

∗All automotive types are available.

(1) Cleaning Solvents

HCFC, Isopropanol, Tap water, Demineralized water, Cleanthrough750H, Pine alpha 100S, Techno care FRW

(2) Temperature Difference : dT *1

dT<=60°C (dT=Component-solvent)
*1 ex. In case the component at +90°C immerses into cleaning solvent at +60°C, then dT=30°C.

(3) Conditions

1. Ultrasonic Wash
   1 minute max. in above solvent at +60°C max.
   (Frequency : 28kHz, Output : 20W/L)
2. Immersion Wash
   5 minutes max. in above solvent at +60°C max.
3. Shower or Rinse Wash
   5 minutes max. in above solvent at +60°C max.

(4) Drying

5 minutes max. by air blow at +80°C max.

(5) Others

1. Total washing time should be within 10 minutes.
2. Please insure the component is thoroughly evaluated in your application circuit.
3. The component may be damaged if it is washed with chlorine, petroleum, or alkali cleaning solvent.

MHz Chip Type Notice

■ Notice (Storage and Operating Conditions)

CSTCC_G

Please do not apply excess mechanical stress to the component and terminals during soldering.
The component is recommended for use with placement machines which employ optical placement capabilities.
The component might be damaged by excessive mechanical force. Please make sure to evaluate by using placement machines before going into mass production. Do not use placement machines which utilize mechanical positioning. Please contact Murata for details beforehand.

1. CSTCC_G (2.00MHz-3.49MHz)
   Conformal coating or washing of the component is not acceptable because it is not hermetically sealed.
2. CSTCC_G (3.50MHz-10.0MHz)
   Conformal coating of the component is acceptable. However, the resin material, curing temperature, and other process conditions should be evaluated to confirm that stable electrical characteristics are maintained.

■ Notice (Storage and Operating Conditions)

CSTCR_G/CSTCE_G/CSTCE_V/CSTCG_V

Please do not apply excess mechanical stress to the component and terminals during soldering.
Conformal coating or washing of the component is not acceptable because it is not hermetically sealed.
The component is recommended for use with placement machines which employ optical placement capabilities.
The component might be damaged by excessive mechanical force. Please make sure to evaluate by using placement machines before going into mass production. Do not use placement machines which utilize mechanical positioning. Please contact Murata for details beforehand.

■ Notice (Storage and Operating Conditions)

CSTCC_G_A/CSTCR_G_B/CSTCE_G_A/CSTCE_V_A

Please do not apply excess mechanical stress to the component and terminals during soldering.
Conformal coating of the component is acceptable. However, the resin material, curing temperature, and other process conditions should be evaluated to confirm that stable electrical characteristics are maintained.
The component is recommended for use with placement machines which employ optical placement capabilities.
The component might be damaged by excessive mechanical force. Please make sure to evaluate by using placement machines before going into mass production. Do not use placement machines which utilize mechanical positioning. Please contact Murata for details beforehand.

■ Notice (Storage and Operating Conditions)

CSTCV_X_Q/CSACV_X_Q

Please do not apply excess mechanical stress to the component and terminals during soldering.
Conformal coating of the component is acceptable. However, the resin material, curing temperature, and other process conditions should be evaluated to confirm that stable electrical characteristics are maintained.
The component is recommended for use with placement machines which employ optical placement capabilities.
In some cases, placement machines which utilize mechanical positioning may apply excessive mechanical force which might result in damage to the ceramic resonator. Please contact Murata before mounting this product using placement machines which use mechanical positioning.

MHz Chip Type Notice

■ Notice (Storage and Operating Conditions)

CSTCW_X/CSACW_X

Please do not apply excess mechanical stress to the component and terminals during soldering.
Conformal coating or washing of the component is not acceptable because it is not hermetically sealed.

■ Notice (Rating)

The component may be damaged if excess mechanical stress is applied.

■ Notice (Handling)

"CERALOCK" may stop oscillating or oscillate irregularly under improper circuit conditions.

MHz Chip Type CSTC Series Packaging

■ Minimum Quantity

Part Number	Plastic Tape ø180mm	Plastic Tape ø330mm	Bulk	Dimensions
CSTCC_G	2,000	6,000	500	a
CSTCC_G_A	2,000	6,000	500	a
CSTCR_G	3,000	9,000	500	a
CSTCR_G_B	3,000	9,000	500	a
CSTCE_G	3,000	9,000	500	b
CSTCE_G_A	3,000	9,000	500	b
CSTCE_V	3,000	9,000	500	b
CSTCE_V_A	3,000	9,000	500	b
CSTCV_X_Q	2,000	6,000	500	a
CSTCW_X	3,000	9,000	500	b
CSTCG_V	3,000	9,000	500	b

The order quantity should be an integral multiple of the "Minimum Quantity" shown above. (pcs.)

■ Dimensions of Reel

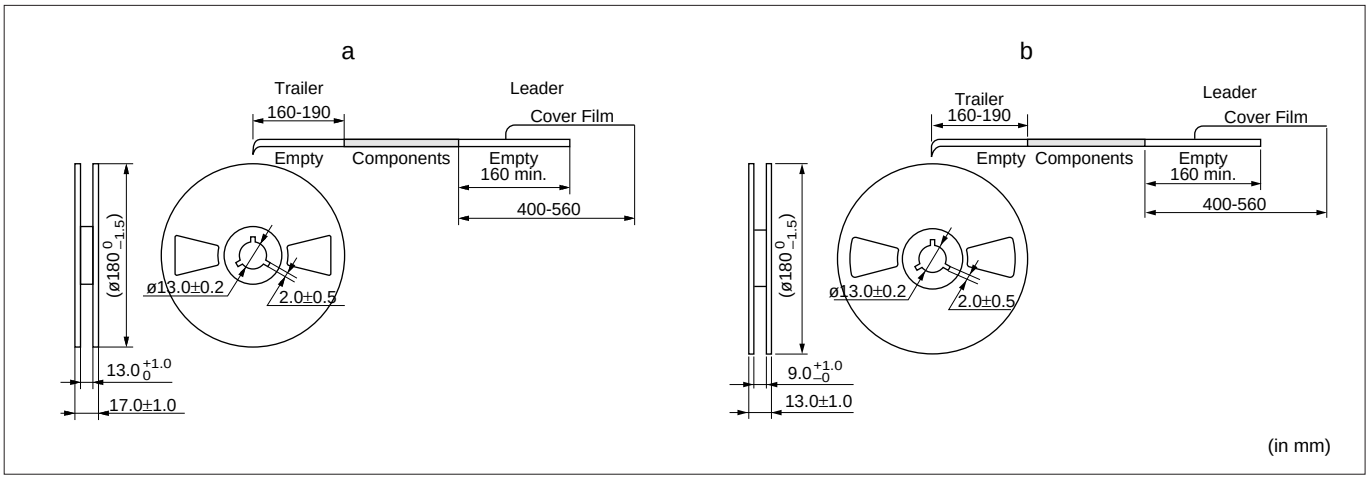

■ Dimensions of Taping

CSTCC_G(_A) less than 3.00MHz

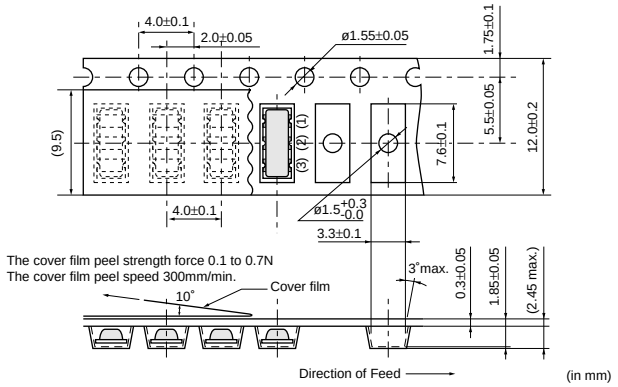

CSTCC_G(_A) more than 3.00MHz

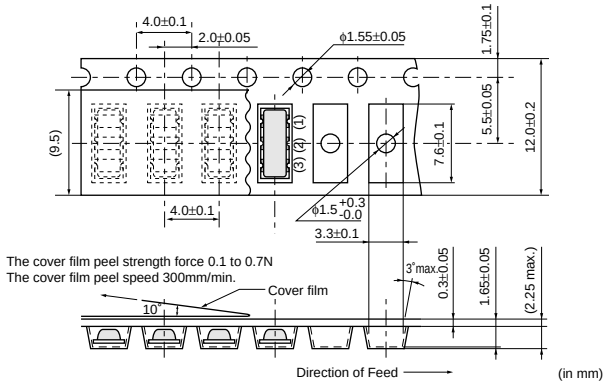

Continued on the following page. ↗

MHz Chip Type CSTC Series Packaging

Continued from the preceding page.

■ Dimensions of Taping

CSTCR_G(_B)

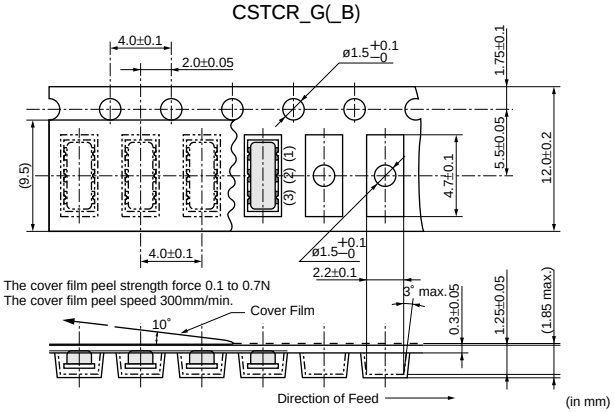

CSTCE_G(_A)

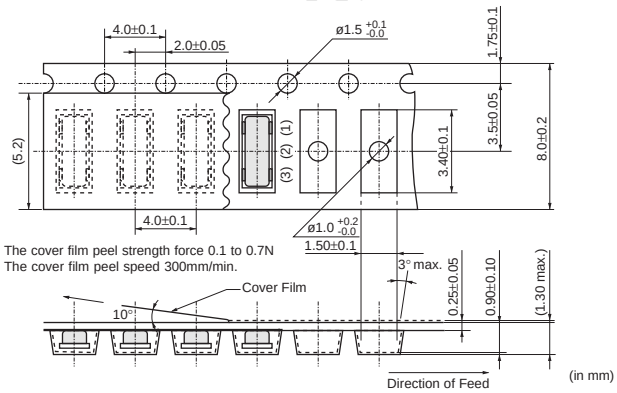

CSTCE_V(_A)

Dimensions of Carrier Tape

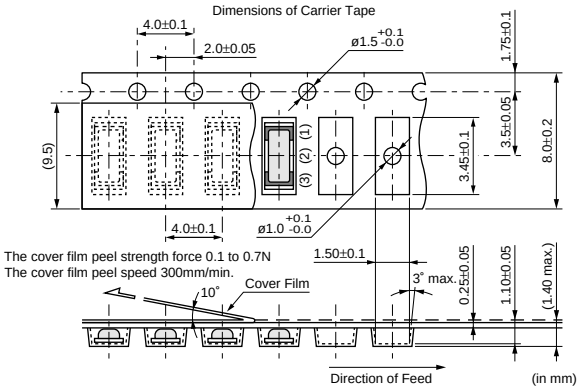

CSTCG_V

Dimensions of Carrier Tape

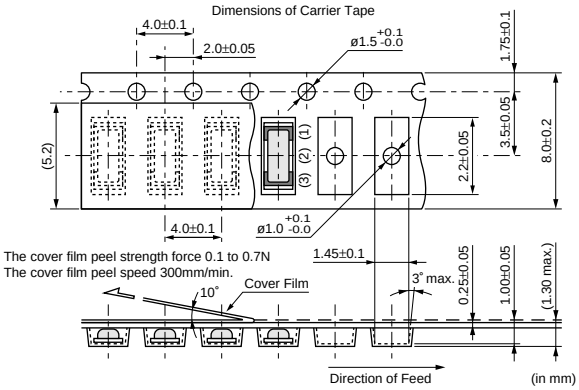

CSTCV_X_Q

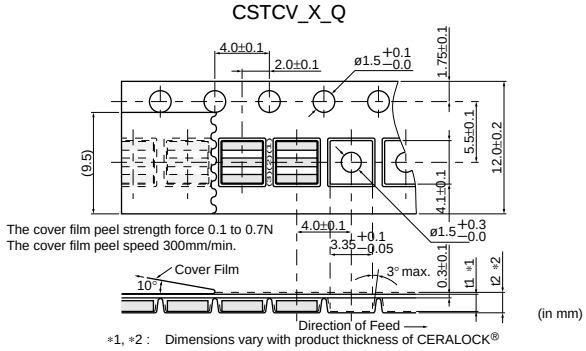

*1, *2 : Dimensions vary with product thickness of CERALOCK®

Thickness of CERALOCK®		1.50–1.40	1.30–1.20	1.10–1.00
t1	*1	1.65±0.1	1.45±0.1	1.2±0.1
t2	*2	2.0 max.	1.8 max.	1.5 max.

CSTCW_X

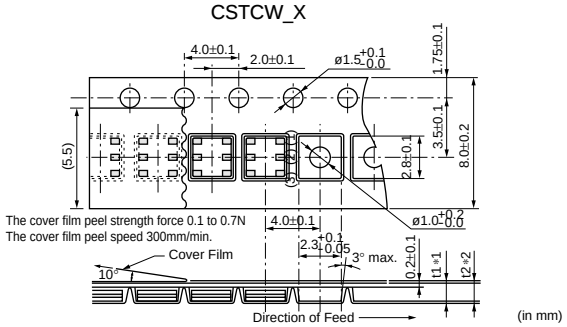

*1, *2 : Dimensions vary with product thickness of CERALOCK®

Thickness of CERALOCK®		1.40–1.20	1.15–1.00	0.95–0.90
t1	*1	1.48±0.1	1.30±0.1	1.12±0.1
t2	*2	2.1 max.	1.9 max.	1.7 max.

MHz Chip Type CSAC Series Packaging

■ Minimum Quantity

Part Number	Plastic Tape ø180mm	Plastic Tape ø330mm	Bulk	Dimensions
CSACV_X_Q	2,000	6,000	500	a
CSACW_X	3,000	9,000	500	b

The order quantity should be an integral multiple of the "Minimum Quantity" shown above. (pcs.)

■ Dimensions of Reel

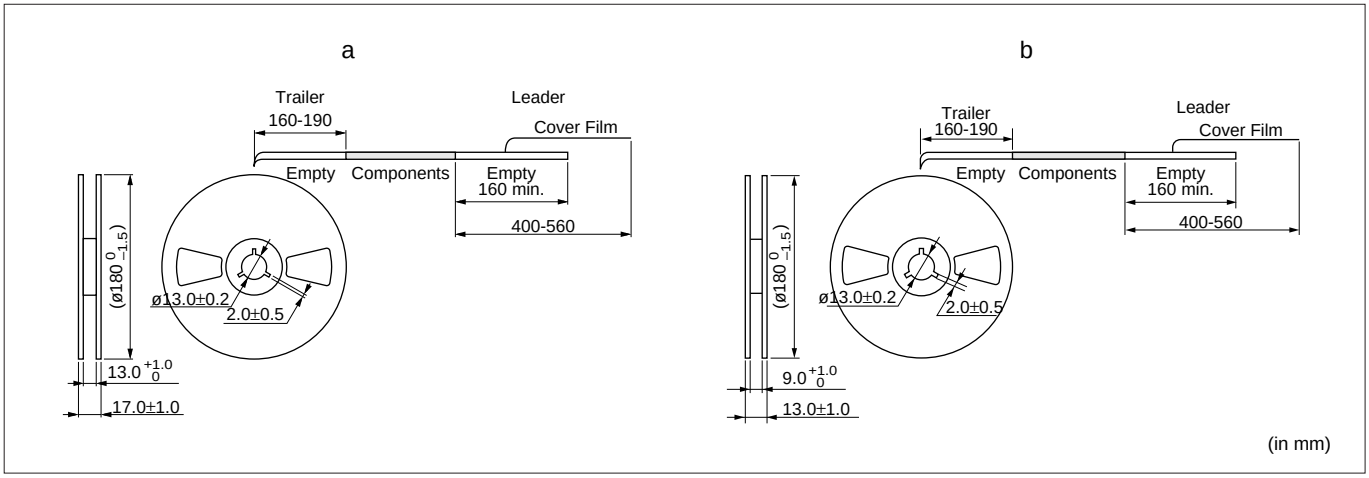

■ Dimensions of Taping

CSACV_X_Q

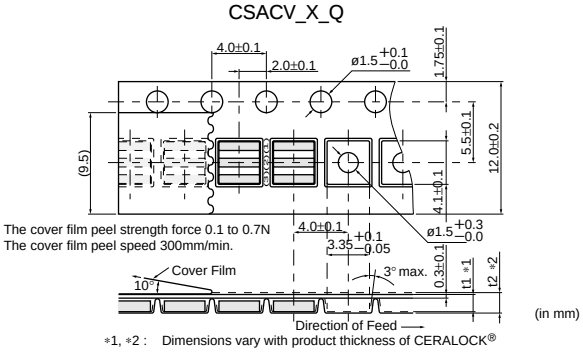

∗1, ∗2 : Dimensions vary with product thickness of CERALOCK®

Thickness of CERALOCK®		1.50–1.40	1.30–1.20	1.10–1.00
t1	∗1	1.65±0.1	1.45±0.1	1.2±0.1
t2	∗2	2.0 max.	1.8 max.	1.5 max.

CSACW_X

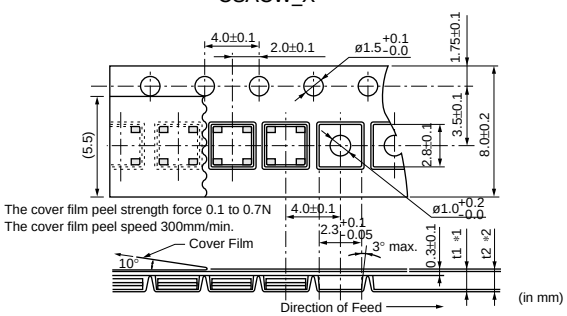

∗1, ∗2 : Dimensions vary with product thickness of CERALOCK®

Thickness of CERALOCK®		1.40–1.20	1.15–1.00	0.95–0.90
t1	∗1	1.48±0.1	1.30±0.1	1.12±0.1
t2	∗2	2.1 max.	1.9 max.	1.7 max.

Ceramic Resonators (CERALOCK®)

Lead Type Three Terminals CSTLS Series

"CERALOCK" with built-in load capacitors.
MURATA's ceramic resonator, "CERALOCK", has been widely applied as the most suitable component for clock oscillators in a broad range of microprocessors. The CSTLS series can be used in the design of oscillation circuits not requiring external load capacitors, enabling both high-density mounting and cost reduction.

CSTLS_G
3.40-10.00MHz

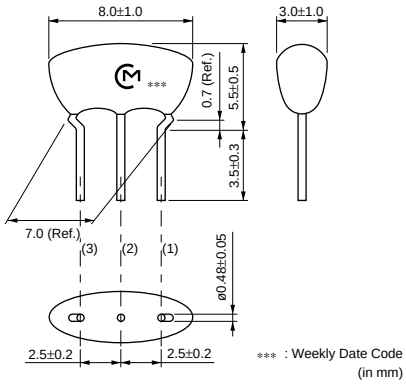

CSTLS_X
16.00-70.00MHz

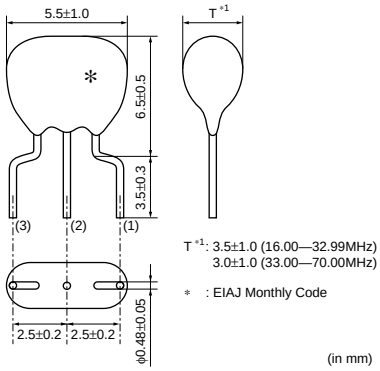

■ Features

1. Oscillation circuits do not require external load capacitors.
2. The series is stable over a wide temperature range.
3. The resonators are compact, light weight and exhibit superior shock resistance performance.
4. They enable the design of oscillator circuits requiring no adjustment.
5. The series is inexpensive and available in stable supply.
6. There is some variation in built-in capacitance values applicable to various IC.

■ Applications

1. DTMF generators
2. Clock oscillators for microcomputers
3. Remote control units
4. Automated office equipment

Part Number	Oscillating Frequency (MHz)	Initial Tolerance (%)	Temp. Stability (%)	Temperature Range (°C)	Use
CSTLS_G	3.40 to 10.00	±0.5	±0.2 [-0.4% to +0.2%:Built-in Capacitance 47pF type]	-20 to +80	For consumer electronics
CSTLS_X	16.00 to 70.00	±0.5	±0.2	-20 to +80	For consumer electronics

Irregular or stop oscillation may occur under unmatched circuit conditions. Please check the actual conditions prior to use.
The order quantity should be an integral multiple of the "Minimum Quantity" shown in the packaging page.

■ Oscillation Frequency Measuring Circuit

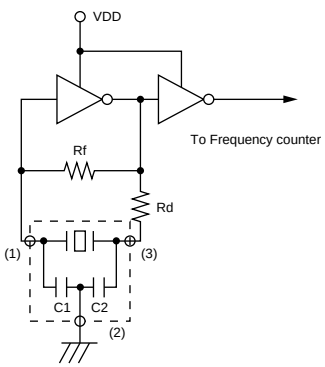

■ Oscillation Frequency Temperature Stability

CSTLS_G

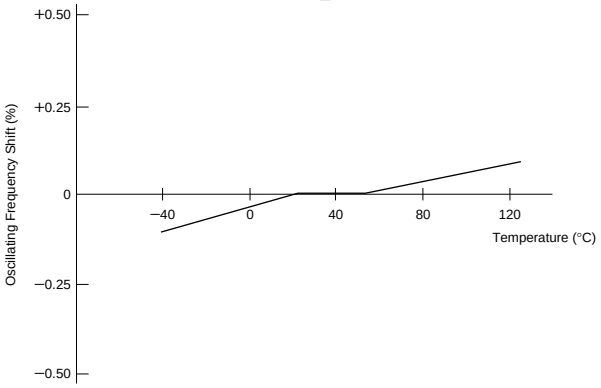

CSTLS_X

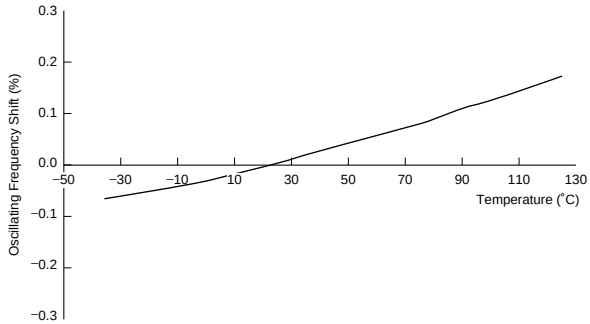

3

Ceramic Resonators (CERALOCK®)

Lead Type Two Terminals CSALS Series

"CERALOCK" with two leaded terminals.
The CSALS series ceramic resonators owe their development to MURATA's innovative expert technologies and the application of mass production techniques typically utilized in the manufacture of piezoelectric ceramic components. Because of their high mechanical Q and consistent high quality, CSALS series are ideally suited to microprocessor and remote control unit applications.
In addition, MURATA offers a special "CERALOCK" version suitable for automatic insertion utilizing tape and reel and other packaging forms. For further information, please contact your local MURATA representative office or authorized distributor.

CSALS_X
16.00-70.00MHz

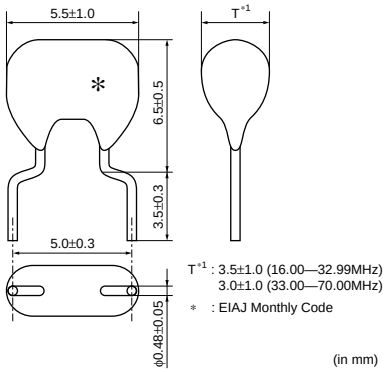

4

■ Features

1. The series is stable over a wide temperature range and with respect to long-term aging.
2. The series comprises fixed, tuned, solid-state devices.
3. The resonators are miniature and light weight.
4. They exhibit excellent shock resistance performance.
5. Oscillating circuits requiring no adjustment can be designed by utilizing these resonators in conjunction with transistors or appropriate ICs.

■ Applications

1. Square-wave and sine-wave oscillator
2. Clock generator for microprocessors
3. Remote control systems

Part Number	Oscillating Frequency (MHz)	Initial Tolerance (%)	Temp. Stability (%)	Temperature Range (°C)	Use
CSALS_X	16.00 to 70.00	±0.5	±0.2	-20 to +80	For consumer electronics

Irregular or stop oscillation may occur under unmatched circuit conditions. Please check the actual conditions prior to use.
The order quantity should be an integral multiple of the "Minimum Quantity" shown in the packaging page.

■ Oscillation Frequency Measuring Circuit

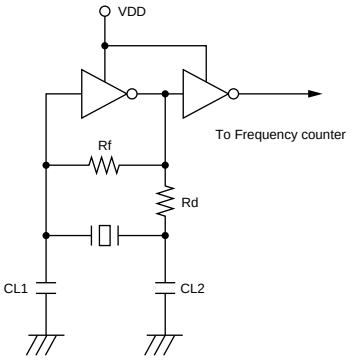

■ Oscillation Frequency Temperature Stability

CSALS_X

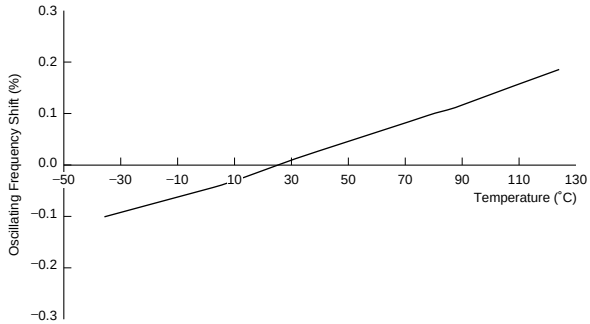

MHz Lead Type Notice

■ Notice (Soldering and Mounting)

The component cannot withstand washing.

■ Notice (Storage and Operating Conditions)

Please do not apply excess mechanical stress to the component and lead terminals during soldering.
Conformal coating or washing of the component is not acceptable because it is not hermetically sealed.

■ Notice (Rating)

The component may be damaged if excess mechanical stress is applied.

■ Notice (Handling)

"CERALOCK" may stop oscillating or oscillate irregularly under improper circuit conditions.

MHz Lead Type CSTLS Series Packaging

■ Minimum Quantity

Part Number	Ammo Pack	Bulk
CSTLS_G (3.40 to 10.0MHz)	2,000	500
CSTLS_X (16.00 to 70.00MHz)	2,000	500

The order quantity should be an integral multiple of the "Minimum Quantity" shown above. (pcs.)

■ Tape Dimensions of CSTLS_G

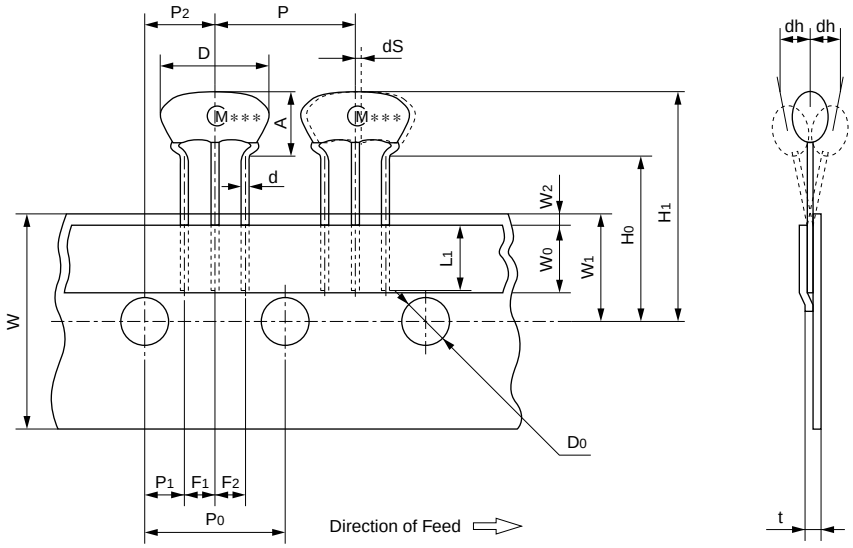

Item	Code	Dimensions	Tolerance	Remarks
Width of diameter	D	8.0	±1.0	
Height of resonator	A	5.5	±0.5	
Dimensions of terminal	d	ø0.48	±0.05	
Lead length under the hold down tape	L_1	5.0 min.	–	
Pitch of component	P	12.7	±0.5	Tolerance for Pitches 10xP_0=127±1
Pitch of sprocket hole	P_0	12.7	±0.2	
Length from sprocket hole center to lead	P_1	3.85	±0.5	
Length from sprocket hole center to component center	P_2	6.35	±0.5	
Lead spacing (I)	F_1	2.5	±0.2	
Lead spacing (II)	F_2	2.5	±0.2	
Slant forward or backward	dh	0	±1.0	1mm max.
Width of carrier tape	W	18.0	±0.5	
Width of hold down tape	W_0	6.0 min.	–	Hold down tape does not exceed the carrier tape.
Position of sprocket hole	W_1	9.0	±0.5	
Gap of hold down tape and carrier tape	W_2	0	$^{+0.5}_{-0}$	
Distance between the center of sprocket hole and lead stopper	H_0	18.0	±0.5	
Total height of resonator	H_1	23.5	±1.0	
Diameter of sprocket hole	D_0	ø4.0	±0.2	
Total tape thickness	t	0.6	±0.2	
Body tilt	dS	0	±1.0	

(in mm)

Continued on the following page.

MHz Lead Type CSTLS Series Packaging

Continued from the preceding page.

■ Tape Dimensions of CSTLS_X

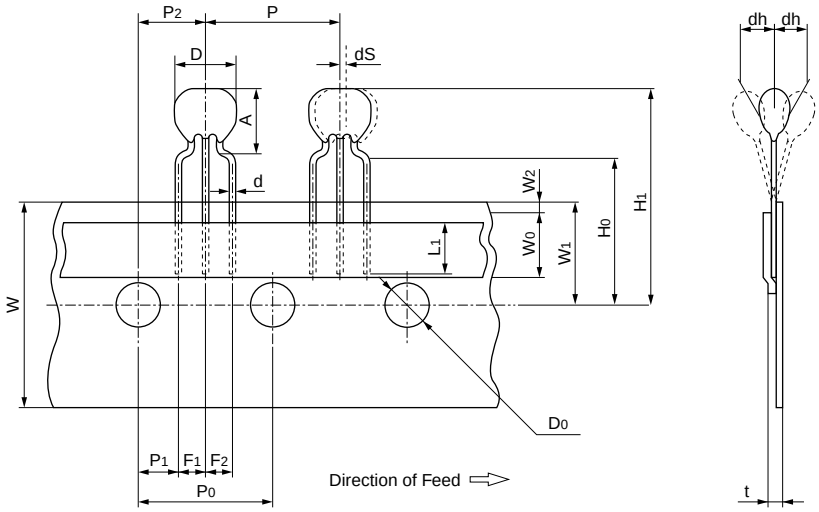

Item	Code	Dimensions	Tolerance	Remarks
Width of diameter	D	5.5	±1.0	
Height of resonator	A	6.5	±0.5	
Dimensions of terminal	d	ø0.48	±0.05	
Lead length under the hold down tape	L_1	5.0 min.	–	
Pitch of component	P	12.7	±0.5	Tolerance for Pitches 10xP_0=127±1
Pitch of sprocket hole	P_0	12.7	±0.2	
Length from sprocket hole center to lead	P_1	3.85	±0.5	
Length from sprocket hole center to component center	P_2	6.35	±0.5	
Lead spacing (I)	F_1	2.5	±0.2	
Lead spacing (II)	F_2	2.5	±0.2	
Slant forward or backward	dh	0	±1.0	1mm max.
Width of carrier tape	W	18.0	±0.5	
Width of hold down tape	W_0	6.0 min.	–	Hold down tape doesn't exceed the carrier tape.
Position of sprocket hole	W_1	9.0	±0.5	
Gap of hold down tape and carrier tape	W_2	0	$^{+0.5}_{-0.0}$	
Distance between the center of sprocket hole and lead stopper	H_0	18.0	±0.5	
Total height of resonator	H_1	24.5	±0.1	
Diameter of sprocket hole	D_0	ø4.0	±0.2	
Total tape thickness	t	0.6	±0.2	
Body tilt	dS	0	±1.0	

(in mm)

MHz Lead Type CSALS Series Packaging

■ Minimum Quantity

Part Number	Ammo Pack	Bulk
CSALS_X (16.00 to 70.00MHz)	2,000	500

The order quantity should be an integral multiple of the "Minimum Quantity" shown above. (pcs.)

■ Tape Dimensions of CSALS

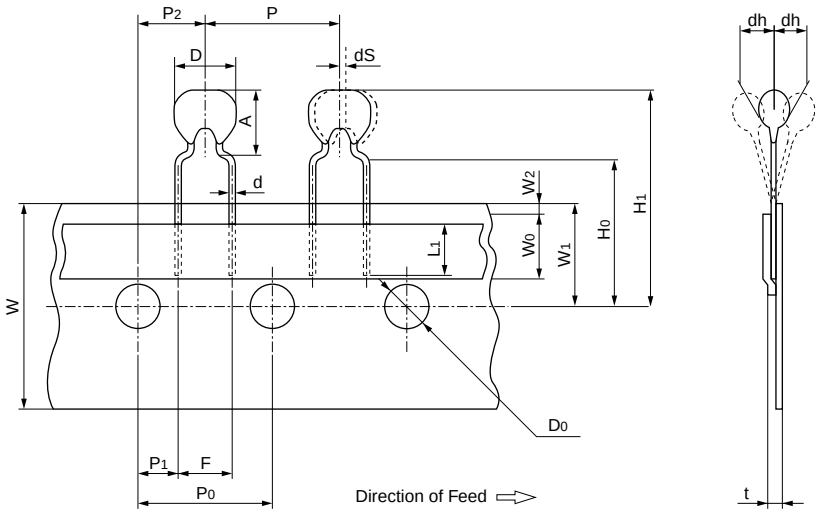

Item	Code	Dimensions	Tolerance	Remarks
Width of diameter	D	5.5	±1.0	
Height of resonator	A	6.5	±0.5	
Dimensions of terminal	d	ø0.48	±0.05	
Lead length under the hold down tape	L_1	5.0 min.	———	
Pitch of component	P	12.7	±0.5	Tolerance for Pitches 10xP_0=127±1
Pitch of sprocket hole	P_0	12.7	±0.2	
Length from sprocket hole center to lead	P_1	3.85	±0.5	
Length from sprocket hole center to component center	P_2	6.35	±0.5	
Lead spacing	F	5.0	±0.3	
Slant forward or backward	dh	0	±1.0	1mm max.
Width of carrier tape	W	18.0	±0.5	
Width of hold down tape	W_0	6.0 min.	———	Hold down tape doesn't exceed the carrier tape.
Position of sprocket hole	W_1	9.0	±0.5	
Gap of hold down tape and carrier tape	W_2	0	$^{+0.5}_{-0}$	
Distance between the center of sprocket hole and lead stopper	H_0	18.0	±0.5	
Total height of resonator	H_1	24.5	±1.0	
Diameter of sprocket hole	D_0	ø4.0	±0.2	
Total tape thickness	t	0.6	±0.2	
Body tilt	dS	0	±1.0	

(in mm)

О компании

ООО "ТрейдЭлектроникс" - это оперативные поставки широкого спектра электронных компонентов отечественного и импортного производства напрямую от производителей и с крупнейших мировых складов. Реализуемая нашей компанией продукция насчитывает более полумиллиона наименований.

Благодаря этому наша компания предлагает к поставке практически не ограниченный ассортимент компонентов как оптовыми, мелкооптовыми партиями, так и в розницу.

Наличие собственной эффективной системы логистики обеспечивает надежную поставку продукции по конкурентным ценам в точно указанные сроки.

Срок поставки со стоков в **Европе и Америке – от 3 до 14 дней.**

Срок поставки из **Азии – от 10 дней.**

Благодаря развитой сети поставщиков, помогаем в поиске и приобретении экзотичных или снятых с производства компонентов.

Предоставляем спец цены на элементы для создания инженерных сэмплов.

Упорный труд, качественный результат дают нам право быть уверенными в себе и надежными для наших клиентов.

Наша компания это:

- Гарантия качества поставляемой продукции
- Широкий ассортимент
- Минимальные сроки поставок
- Техническая поддержка
- Подбор комплектации
- Индивидуальный подход
- Гибкое ценообразование

Наша организация особенно сильна в поставках модулей, микросхем, пассивных компонентов, ксайленсах (XC), EPF, EPM и силовой электроники.

Большой выбор предлагаемой продукции, различные виды оплаты и доставки, позволят Вам сэкономить время и получить максимум выгоды от сотрудничества с нами!

Trade Electronics.ru

гарантия бесперебойности производства и качества выпускаемой продукции

Перечень производителей, продукцию которых мы поставляем на российский рынок

AMD
ANALOG DEVICES
BOURNS
Coilcraft
élantec Semiconductor, Inc.
HARRIS
Infineon
JRC
MICREL
MOTOROLA
nichicon
PHILIPS
ROHM
SGS-THOMSON
Sipex
TAIYO YUDEN
TOKO
ZILOG
Winbond
Allegro
ATMEL
BURR - BROWN
EXAR
HITACHI
intel
Lattice
muRata
OKI
QUALCOMM
SAMSUNG
SHARP
SONY
TDK
TOSHIBA
KYOCERA
ALTERA
AVX
CITILYST
CYPRESS
FAIRCHILD SEMICONDUCTOR
HOLTEK
International IOR Rectifier
LINEAR TECHNOLOGY
MITSUBISHI
National Semiconductor
ON Semiconductor
REALTEK
SANYO
SHINDENGEN
SGS
TECCOR
TUNDRA
XILINX
Amphenol
Bay Linear
CIRRUS LOGIC
DALLAS
FUJITSU
IDT
intersil
MAXIM
molex
NEC
Panasonic
RENESAS
SII
SIEMENS
ST
Texas Instruments
VISHAY
ZETEX SEMICONDUCTORS

Trade Electronics.ru

гарантия бесперебойности производства и качества выпускаемой продукции

С удовольствием будем прорабатывать для Вас поставки всех необходимых компонентов по текущим запросам для скорейшего выявления групп элементов, по которым сотрудничество именно с нашей компанией будет для Вас максимально выгодным!

С уважением,

Менеджер отдела продаж ООО

«Трейд Электроникс»

Шишлаков Евгений

8 (495)668-30-28 доб 169

manager28@tradeelectronics.ru

http://www.tradeelectronics.ru/