OMRON

General Purpose Photoelectric Sensor

E3S-B

Miniature DC Sensor with Built-in Amplifier Offers Vertical or Horizontal Single-Screw Mounting

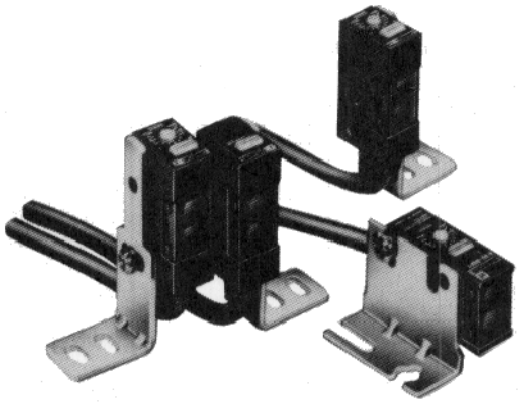

- Visible red beam
- High-speed sensing, 0.5 ms response time
- NEMA 4X, 6 and IP67
- Single-screw mounting
- Pre-wired, Light-ON/Dark-ON wire selectable

Ordering Information

■ SENSORS

Through-beam sensors include both emitter and receiver. The polarized retroreflective sensors include E39-R1 reflector. All sensors include mounting hardware.

Method of detection		Through-beam	Polarized retroreflective	Diffuse reflective
Sensing distance		2 m (6.56 ft)	1 m (3.28 ft)	20 cm (7.87 in)
Mounting	Output	**Part number**		
Horizontal	NPN	**E3S-BT11**	**E3S-BR11**	**E3S-BD11**
	PNP	**E3S-BT31**	**E3S-BR31**	**E3S-BD31**
Vertical	NPN	**E3S-BT61**	**E3S-BR61**	**E3S-BD61**
	PNP	**E3S-BT81**	**E3S-BR81**	**E3S-BD81**

■ ACCESSORIES

Description		Part number
Slits for E3S-BT□□ sensors (3 pairs of adhesive slits: 2 mm, 1 mm and 0.5 mm wide)		**E39-S47**
Aperture kit for E3S-BT□□ sensors (3 pairs of adhesive apertures: 2 mm, 1 mm and 0.5 mm dia.)		**E39-S48**
Mutual interference filters for E3S-BT□□ sensors (2 pairs: horizontal and vertical, includes mounting hardware)		**E39-E8**
Small corner cube reflector	10 to 60 cm (3.94 to 23.62 in)	**E39-R3**
	7 to 35 cm (2.76 to 13.78 in)	**E39-R4**
Adhesive back reflector	10 to 20 cm (3.94 to 7.87 in)	**E39-RSA**
	10 to 30 cm (3.94 to 11.81 in)	**E39-RSB**
Stainless steel mounting bracket for E39-R1 reflector		**E39-L7**
Stainless steel mounting bracket for E39-R3 reflector		**E39-L54**

■ ACCESSORIES

Description	Part number
Corner cube reflector (supplied with E3S-BR□□)	**E39-R1**
Stainless steel mounting bracket for horizontal sensors (supplied with each sensor)	**E39-L71**
Stainless steel mounting bracket for vertical sensors (supplied with each sensor)	**E39-L72**
Mounting adapter plate	**E39-L61**

Specifications

Part number		E3S-BT□□	E3S-BT□□	E3S-BD□□
Method of detection		Through-beam	Polarized retroreflective	Diffuse reflective
Supply voltage		10 to 30 VDC, ±10%		
Current consumption		35 mA max. (emitter and receiver)	25 mA max.	
Sensing distance	White mat paper	0 to 2 m (0 to 6.56 ft)	0.1 to 1 m with E39-R1 (0.33 to 3.28 ft)	0.1 to 20 cm (0.04 to 7.87 in)
	Black mat paper			0.2 to 6 cm (0.08 to 2.36 in)
	With accessories	60 cm (1.97 ft) with E39-E8 filter 1 m (3.28 ft) with 2 mm slit 50 cm (1.64 ft) with 1 mm slit 25 cm (9.84 in) with 0.5 mm slit 60 cm (1.97 ft) with 2 mm dia. aperture 17 cm (6.69 in) with 1 mm dia. aperture 4 cm (1.57 in) with 0.5 mm dia. aperture	10 to 60 cm with E39-R3 (3.94 to 23.62 in) 7 to 35 cm with E39-R4 (2.76 to 13.78 in) 10 to 20 cm with E39-RSA (3.94 to 7.87 in) 10 to 30 cm with E39-RSB (3.94 to 11.81 in)	—
Light source		Pulse modulated red LED (700 nm)		
Standard object	Type	Opaque materials	Opaque materials	Opaque and transparent objects
	Size	5.5 mm (0.22 in) dia. minimum	30 mm (1.18 in) dia. minimum	10 x 10 cm (3.94x 3.94 in) white mat paper
Operation mode		Light-ON/Dark-ON operation, wire selectable		
Variation in sensing distance		—	—	+30% max., -0% max.
Hysteresis		—	—	20% max.
Variation in optical axis and mounting direction		±2° max.		
Sensitivity		Adjustable, 3/4-turn potentiometer		
Mutual interference protection		Not provided	Provided	Provided
Control output	Type	NPN transistor, open collector (E3S-B□11, E3SB□61) PNP transistor, open collector (E3S-B□31, E3SB□81)		
	Max. load	100 mA max. at 30 VDC		
	Max. ON-state voltage drop	1 VDC max. at 100 mA load current		
Response time		0.5 ms max. for both ON and OFF operation		
Circuit protection		Load short-circuit protection, reverse polarity protection		
Indicators		Emitter: Operation (red) Receiver: Operation (red) Stability (green)	Operation (red), Stability (green)	
Materials	Lens	Denatured polyarylate		
	Case	Polybutylene terephthalate (PBT)		
	Bracket	Stainless steel		
Mounting		Either side surface with one stud and one threaded hole. Bracket E39-L71 for horizontal or E39-L72 for vertical sensors and hardware included.		
Connections	Prewired	2 m (6.56 ft) long cable		
Weight	Emitter	56 g (1.96 oz)	56 g (1.96 oz)	65 g (2.28 oz)
	Receive	66 g (2.31 oz)	—	—
Enclosure rating	IEC 144	IP67		
	NEMA	4X, 6		
Ambient temperature	Operating	-25° to 55°C (-13° to 131°F) with no icing		
	Storage	-40° to 70°C (-40° to 158°F)		

■ OUTPUT CIRCUIT DIAGRAMS

NPN Output

Through-beam Emitter

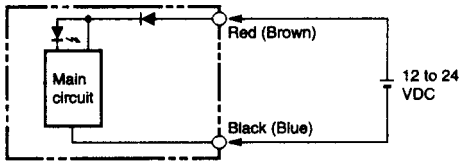

Through-beam Receiver, Retroreflective, Diffuse Reflective

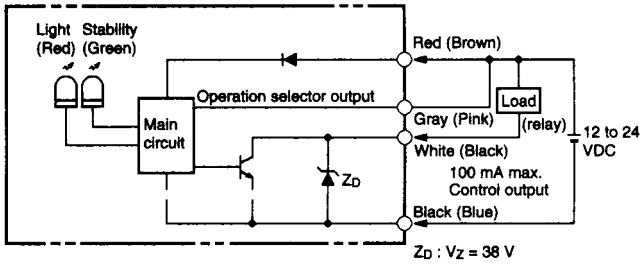

PNP Output

Through-beam Emitter

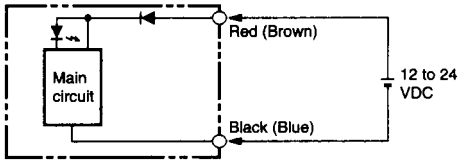

Through-beam Receiver, Retroreflective, Diffuse Reflective

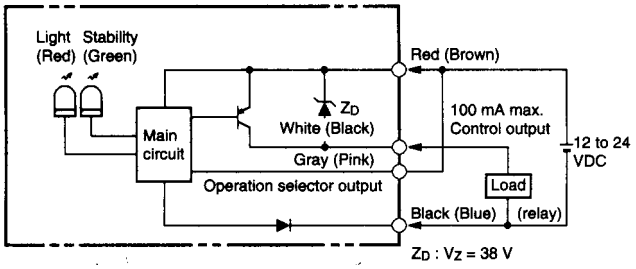

Note: Circuits shown are for Light-ON operation. For Dark-ON operation, the gray wire is connected to the black wire (0 VDC). IEC colors are shown in parentheses.

Engineering Data

■ EXCESS GAIN RATIO

Excess Gain vs. Set Distance (Typical)

E3S-BT□1

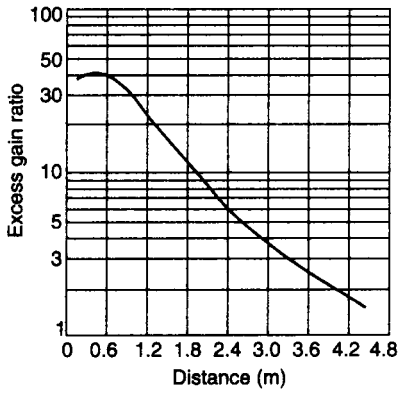

E3S-BR□1 (with E39-R1 Reflector)

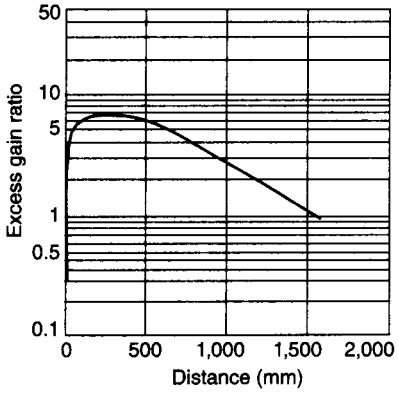

E3S-BD□1 (Detection of White Paper)

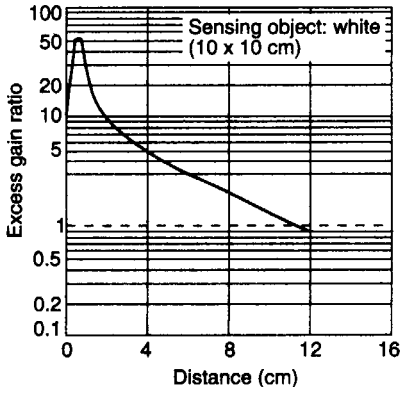

E3S-BD□1 (Detection of Black Paper)

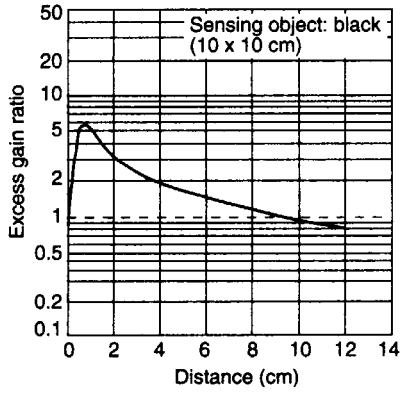

■ OPERATING RANGE

Parallel Operating Range (Typical)

E3S-BT□1 (Left and Right)

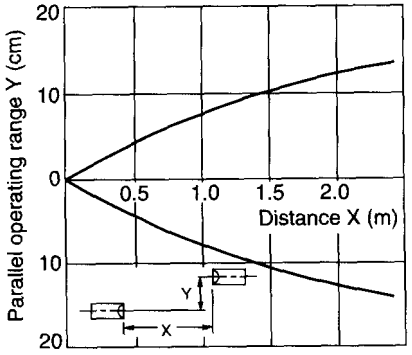

E3S-BT□1 (Up and down)

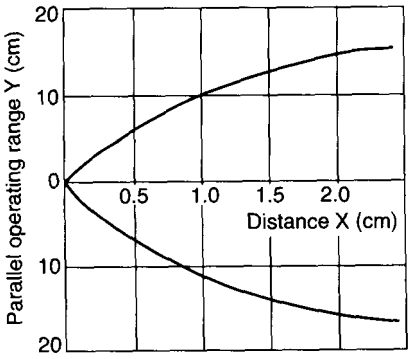

Sensing Distance vs. Set Distance

E3S-BT□11

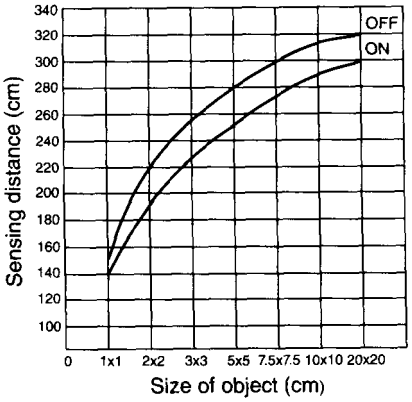

E3S-BD□1 (Left and Right)

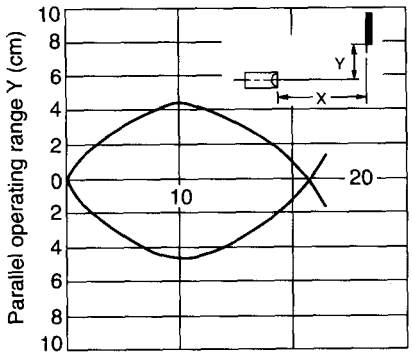

E3S-BD□1 (Up and down)

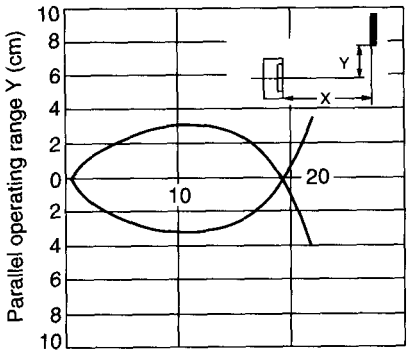

Dimensions

Unit: mm (inch)

■ SENSORS

E3S-BT11
E3S-BT31

Emitter

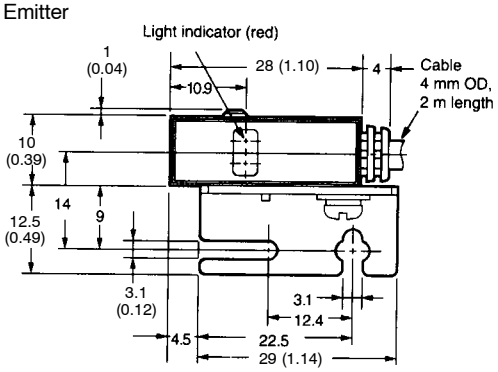

Receiver

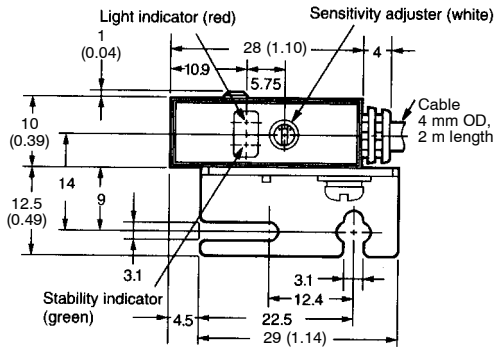

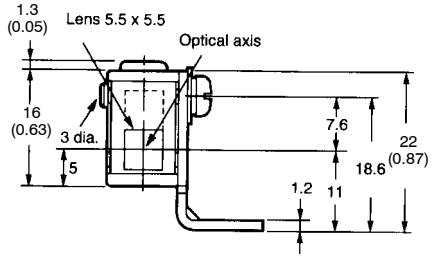

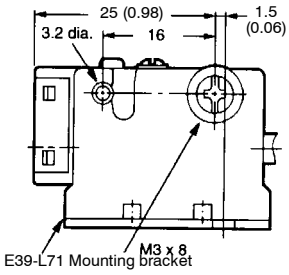

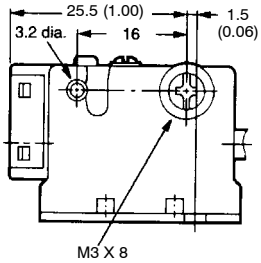

Unit: mm (inch)

E3S-BT61
E3S-BT81

Emitter

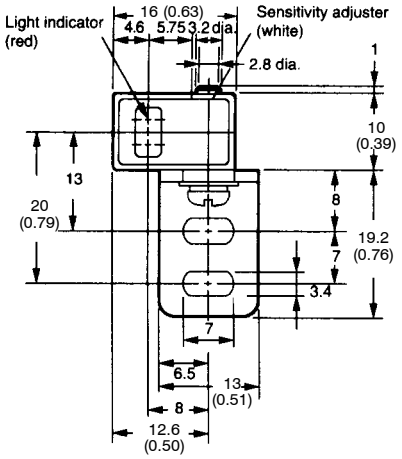

Receiver

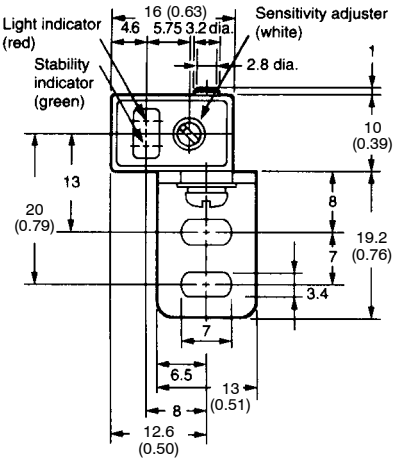

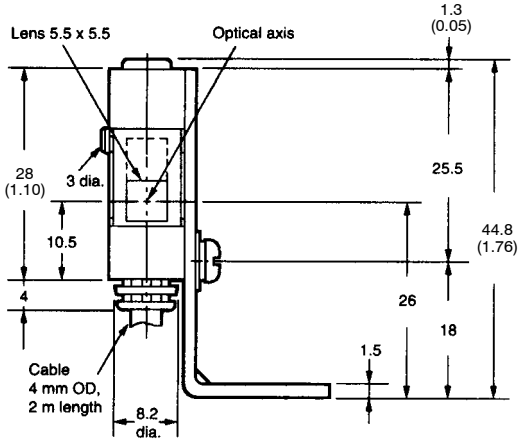

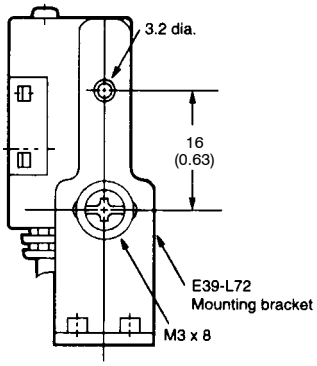

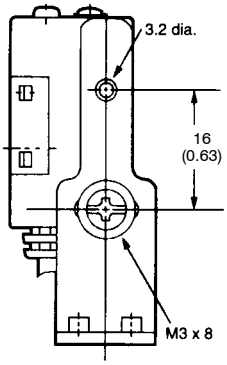

E3S-BR11
E3S-BR31

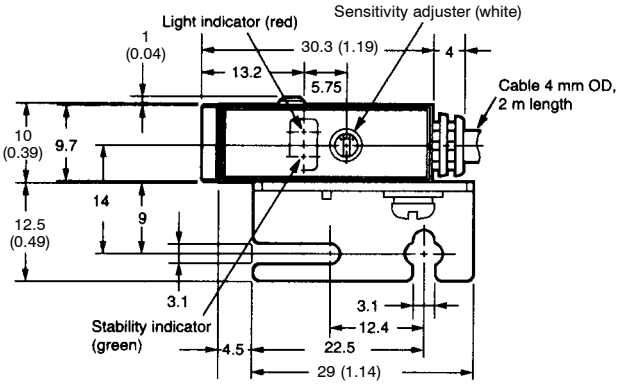

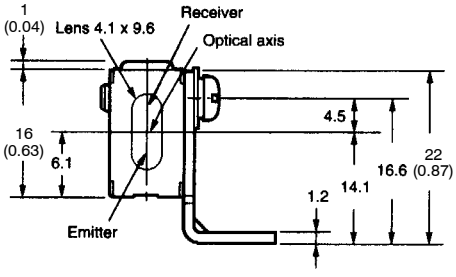

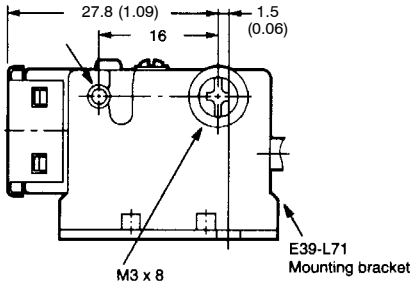

E3S-BR61
E3S-BR81

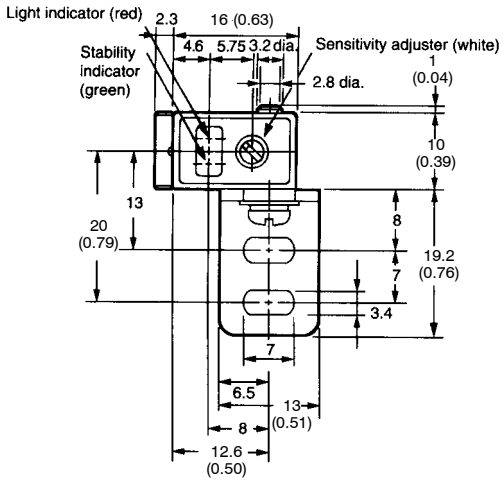

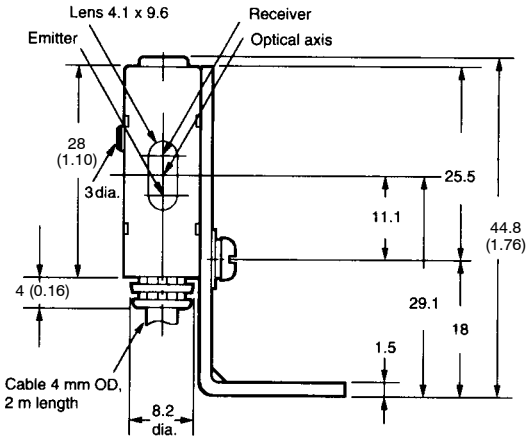

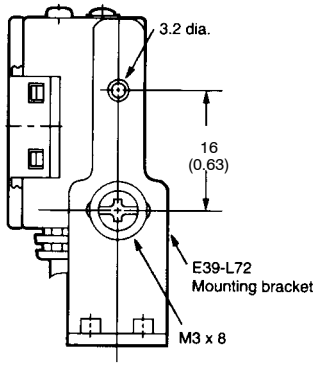

E3S-BD11
E3S-BD31

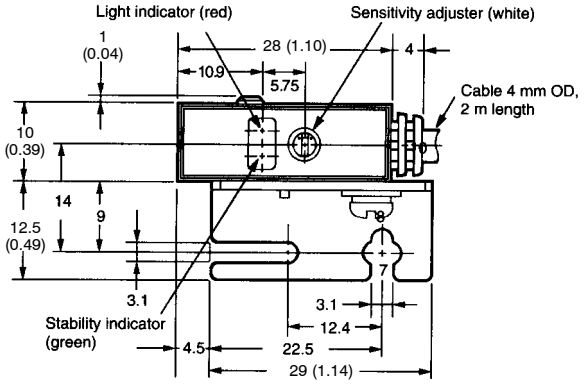

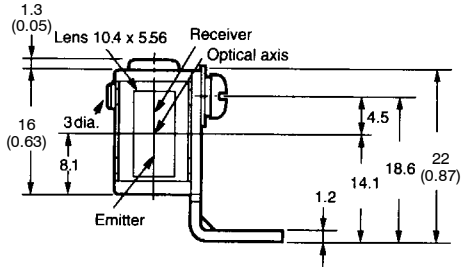

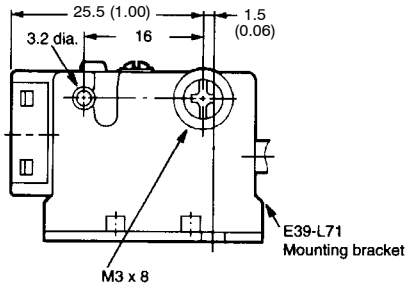

Unit: mm (inch)

E3S-BD61
E3S-BD81

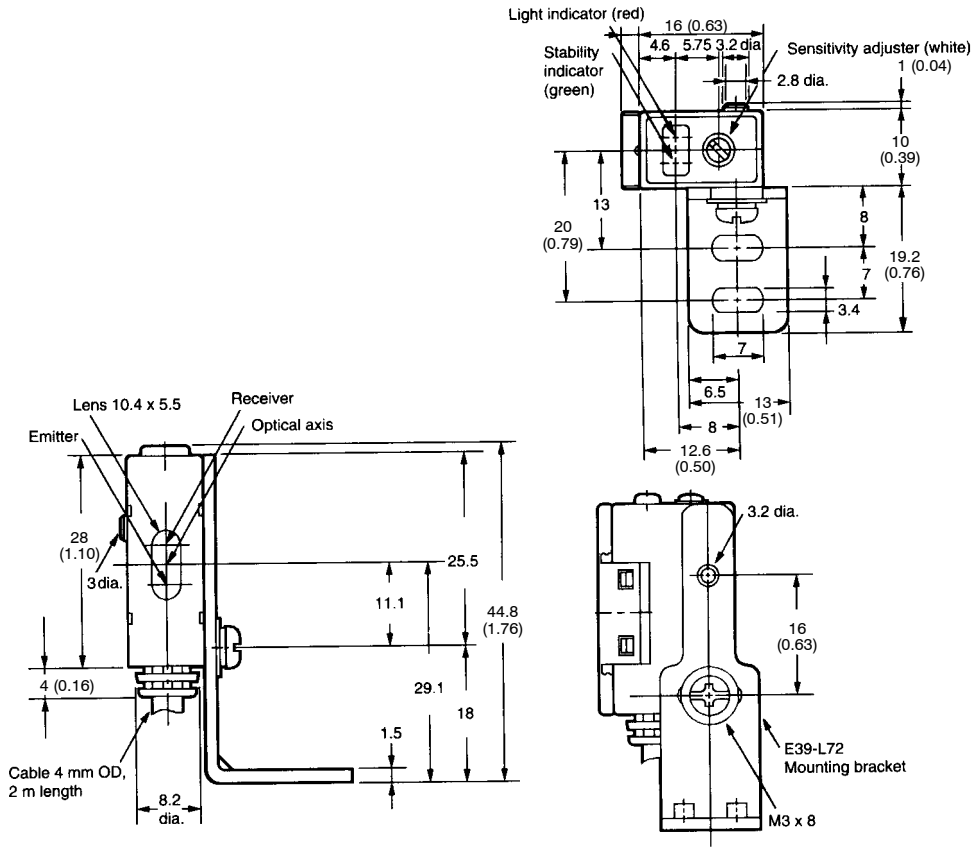

■ CORNER CUBE REFLECTORS

E39-R1 Reflector
(Included with E3S-AR□)

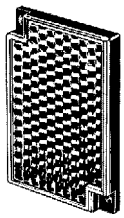

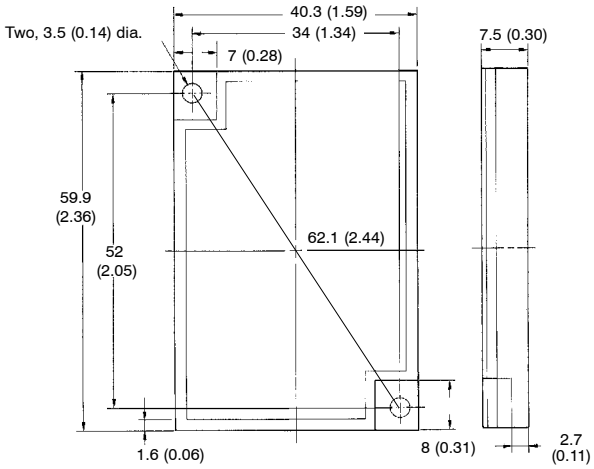

E39-L7 R1 Reflector Adapter
for E39-R1 Reflector
(Order Separately)

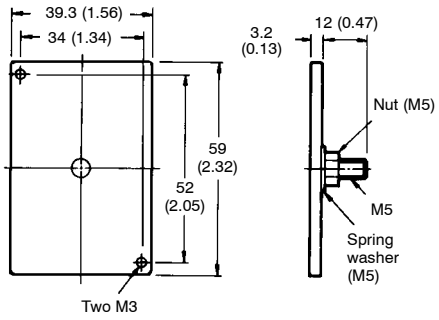

E39-R1 Reflector (Optional)

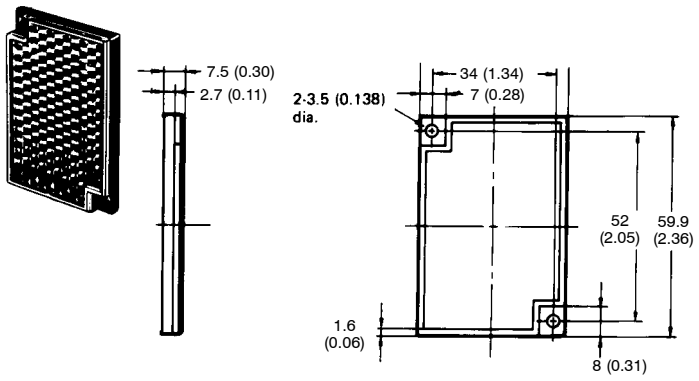

Dimensions with E39-L54 Mounting Bracket (included)

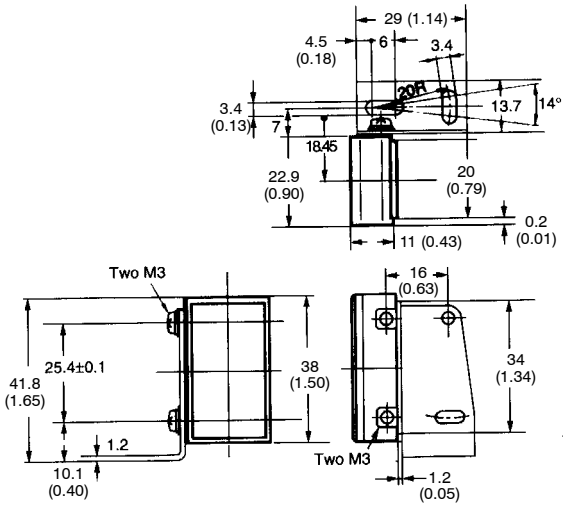

E39-R4 Optional Mini-reflector

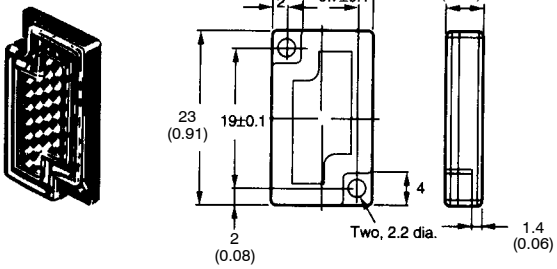

E39-RSA Optional Adhesive-backed Reflector

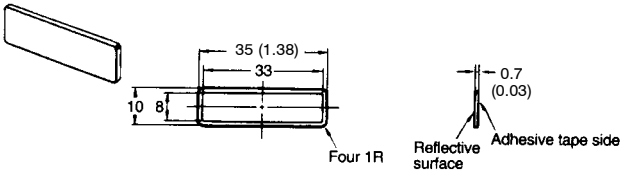

E39-RSB Optional Adhesive-backed Reflector

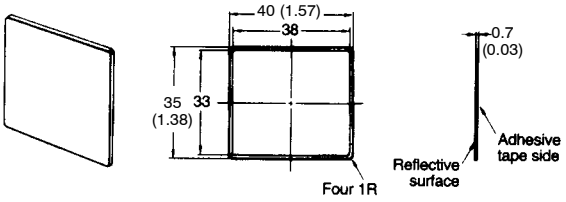

■ SLITS AND APERTURES FOR THROUGH-BEAM SENSORS

E39-S47 Slit Set

The kit includes two sets each of 0.5 mm, 1 mm and 2 mm slits. Mount the adhesive-backed slit to the lens of both emitter and receiver. Use the same slit size on both emitter and receiver for best results.

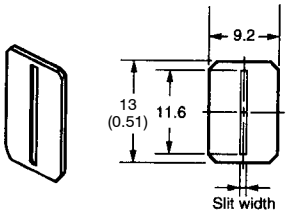

E39-S48 Aperture Set

The kit includes two sets each of 0.5 mm, 1 mm and 2 mm diameter apertures. Mount the adhesive-backed aperture to the lens of both the emitter and receiver. Use the same aperture size on both emitter and receiver for best results.

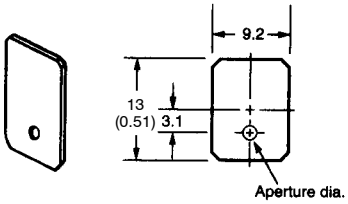

■ MUTUAL INTERFERENCE FILTER

E39-E8

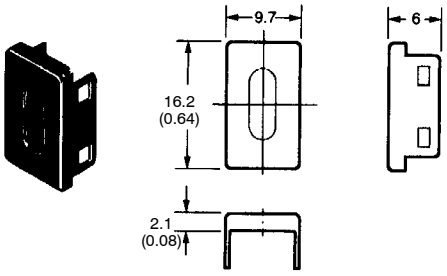

■ MOUNTING ADAPTER PLATE

E39-L61

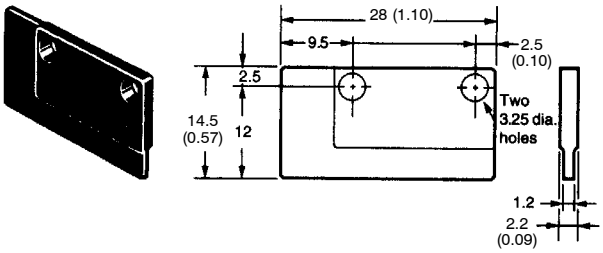

Operation

■ SENSITIVITY ADJUSTMENT

Unlike conventional photoelectric sensors, the variation in the sensitivity of E3S photoelectric sensors is minimal. This means the sensitivity can be adjusted on only a single photoelectric sensor, and then the adjusters on the other photoelectric sensors can be set to the same scale position. There is no need to adjust the sensitivity of each photoelectric sensor individually.

Steps	Step 1	Step 2	Step 3
Function	Determine Position A	Determine Position B	Adjust to optimum setting
Sensing condition	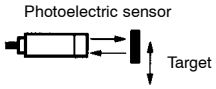	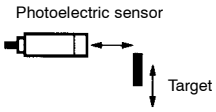	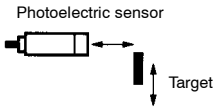
Sensitivity adjuster	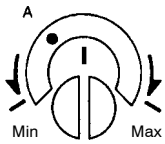	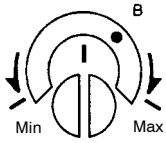	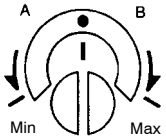
Indicators	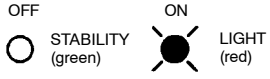	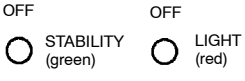	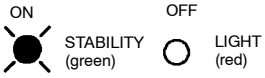
	Place target at the desired sensing distance. Set sensitivity adjuster to the minimum scale position and gradually increase sensitivity by turning the sensitivity adjuster clockwise until the Light Incident indicator (red LED) turns ON. Position A designates the point at which the LED has turned ON.	Remove the target. Starting from the maximum scale position, gradually decrease sensitivity by turning the sensitivity adjuster counterclockwise until the Light Incident indicator (red LED) is OFF. Position B designates the point at which the LED has turned OFF.	Set the sensitivity indicator to the position between Positions A and B (in some cases, Positions A and B are opposite of the above example). The photoelectric sensor will then work normally if the stability indicator (green) is lit with and without the target. If it is not lit, stable operation cannot be expected, in which case a different detection method should be applied.

NOTE: DIMENSIONS SHOWN ARE IN MILLIMETERS. To convert millimeters to inches divide by 25.4.

OMRON®

OMRON ELECTRONICS LLC
One East Commerce Drive
Schaumburg, IL 60173
1-800-55-OMRON

OMRON ON-LINE
Global - http://www.omron.com
USA - http://www.omron.com/oei
Canada - http://www.omron.com/oci

OMRON CANADA, INC.
885 Milner Avenue
Scarborough, Ontario M1B 5V8
416-286-6465

Cat. No. CEDSAX4 11/01 Specifications subject to change without notice. Printed in U.S.A.

TradeElectronics.ru

гарантия бесперебойности производства и качества выпускаемой продукции

О компании

ООО "ТрейдЭлектроникс" - это оперативные поставки широкого спектра электронных компонентов отечественного и импортного производства напрямую от производителей и с крупнейших мировых складов. Реализуемая нашей компанией продукция насчитывает более полумиллиона наименований.

Благодаря этому наша компания предлагает к поставке практически не ограниченный ассортимент компонентов как оптовыми, мелкооптовыми партиями, так и в розницу.

Наличие собственной эффективной системы логистики обеспечивает надежную поставку продукции по конкурентным ценам в точно указанные сроки.

Срок поставки со стоков в **Европе и Америке – от 3 до 14 дней.**

Срок поставки из **Азии – от 10 дней.**

Благодаря развитой сети поставщиков, помогаем в поиске и приобретении экзотичных или снятых с производства компонентов.

Предоставляем спец цены на элементы для создания инженерных сэмплов.

Упорный труд, качественный результат дают нам право быть уверенными в себе и надежными для наших клиентов.

Наша компания это:

- Гарантия качества поставляемой продукции
- Широкий ассортимент
- Минимальные сроки поставок
- Техническая поддержка
- Подбор комплектации
- Индивидуальный подход
- Гибкое ценообразование

Наша организация особенно сильна в поставках модулей, микросхем, пассивных компонентов, ксайленсах (XC), EPF, EPM и силовой электроники.

Большой выбор предлагаемой продукции, различные виды оплаты и доставки, позволят Вам сэкономить время и получить максимум выгоды от сотрудничества с нами!

Trade Electronics.ru

гарантия бесперебойности производства и качества выпускаемой продукции

Перечень производителей, продукцию которых мы поставляем на российский рынок

Trade Electronics.ru

гарантия бесперебойности производства и качества выпускаемой продукции

С удовольствием будем прорабатывать для Вас поставки всех необходимых компонентов по текущим запросам для скорейшего выявления групп элементов, по которым сотрудничество именно с нашей компанией будет для Вас максимально выгодным!

С уважением,

Менеджер отдела продаж ООО

«Трейд Электроникс»

Шишлаков Евгений

8 (495)668-30-28 доб 169

manager28@tradeelectronics.ru

http://www.tradeelectronics.ru/