National Semiconductor

June 2004

LM1117/LM1117I
800mA Low-Dropout Linear Regulator

General Description

The LM1117 is a series of low dropout voltage regulators with a dropout of 1.2V at 800mA of load current. It has the same pin-out as National Semiconductor's industry standard LM317.

The LM1117 is available in an adjustable version, which can set the output voltage from 1.25V to 13.8V with only two external resistors. In addition, it is also available in five fixed voltages, 1.8V, 2.5V, 2.85V, 3.3V, and 5V.

The LM1117 offers current limiting and thermal shutdown. Its circuit includes a zener trimmed bandgap reference to assure output voltage accuracy to within ±1%.

The LM1117 series is available in LLP, TO-263, SOT-223, TO-220, and TO-252 D-PAK packages. A minimum of 10µF tantalum capacitor is required at the output to improve the transient response and stability.

Features

- Available in 1.8V, 2.5V, 2.85V, 3.3V, 5V, and Adjustable Versions
- Space Saving SOT-223 and LLP Packages
- Current Limiting and Thermal Protection
- Output Current 800mA
- Line Regulation 0.2% (Max)
- Load Regulation 0.4% (Max)
- Temperature Range
  - — LM1117 0˚C to 125˚C
  - — LM1117I –40˚C to 125˚C

Applications

- 2.85V Model for SCSI-2 Active Termination
- Post Regulator for Switching DC/DC Converter
- High Efficiency Linear Regulators
- Battery Charger
- Battery Powered Instrumentation

Typical Application

Active Terminator for SCSI-2 Bus

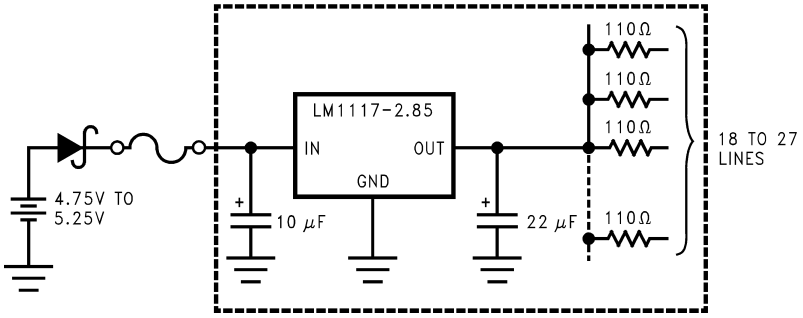

10091905

Fixed Output Regulator

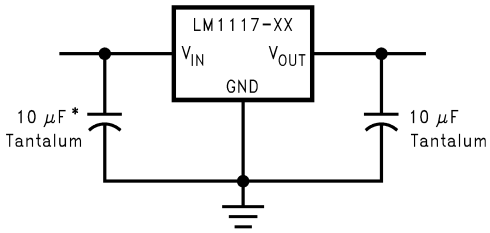

* Required if the regulator is located far from the power supply filter.

10091928

© 2004 National Semiconductor Corporation

Ordering Information

Package	Temperature Range	Part Number	Packaging Marking	Transport Media	NSC Drawing
3-lead SOT-223	0˚C to +125˚C	LM1117MPX-ADJ	N03A	Tape and Reel	MP04A
		LM1117MPX-1.8	N12A	Tape and Reel	
		LM1117MPX-2.5	N13A	Tape and Reel	
		LM1117MPX-2.85	N04A	Tape and Reel	
		LM1117MPX-3.3	N05A	Tape and Reel	
		LM1117MPX-5.0	N06A	Tape and Reel	
	–40˚C to +125˚C	LM1117IMPX-ADJ	N03B	Tape and Reel	
		LM1117IMPX-3.3	N05B	Tape and Reel	
		LM1117IMPX-5.0	N06B	Tape and Reel	
3-lead TO-220	0˚C to +125˚C	LM1117T-ADJ	LM1117T-ADJ	Rails	T03B
		LM1117T-1.8	LM1117T-1.8	Rails	
		LM1117T-2.5	LM1117T-2.5	Rails	
		LM1117T-2.85	LM1117T-2.85	Rails	
		LM1117T-3.3	LM1117T-3.3	Rails	
		LM1117T-5.0	LM1117T-5.0	Rails	
3-lead TO-252	0˚C to +125˚C	LM1117DTX-ADJ	LM1117DT-ADJ	Tape and Reel	TD03B
		LM1117DTX-1.8	LM1117DT-1.8	Tape and Reel	
		LM1117DTX-2.5	LM1117DT-2.5	Tape and Reel	
		LM1117DTX-2.85	LM1117DT-2.85	Tape and Reel	
		LM1117DTX-3.3	LM1117DT-3.3	Tape and Reel	
		LM1117DTX-5.0	LM1117DT-5.0	Tape and Reel	
	–40˚C to +125˚C	LM1117IDTX-ADJ	LM1117IDT-ADJ	Tape and Reel	
		LM1117IDTX-3.3	LM1117IDT-3.3	Tape and Reel	
		LM1117IDTX-5.0	LM1117IDT-5.0	Tape and Reel	
8-lead LLP	0˚C to +125˚C	LM1117LDX-ADJ	1117ADJ	Tape and Reel	LDC08A
		LM1117LDX-1.8	1117-18	Tape and Reel	
		LM1117LDX-2.5	1117-25	Tape and Reel	
		LM1117LDX-2.85	1117-28	Tape and Reel	
		LM1117LDX-3.3	1117-33	Tape and Reel	
		LM1117LDX-5.0	1117-50	Tape and Reel	
	–40˚C to 125˚C	LM1117ILDX-ADJ	1117IAD	Tape and Reel	
		LM1117ILDX-3.3	1117I33	Tape and Reel	
		LM1117ILDX-5.0	1117I50	Tape and Reel	
TO-263	0˚C to +125˚C	LM1117SX-ADJ	LM1117SADJ	Tape and Reel	TS3B
		LM1117SX-2.85	LM1117S2.85	Tape and Reel	
		LM1117SX-3.3	LM1117S3.3	Tape and Reel	
		LM1117SX-5.0	LM1117S5.0	Tape and Reel	

Block Diagram

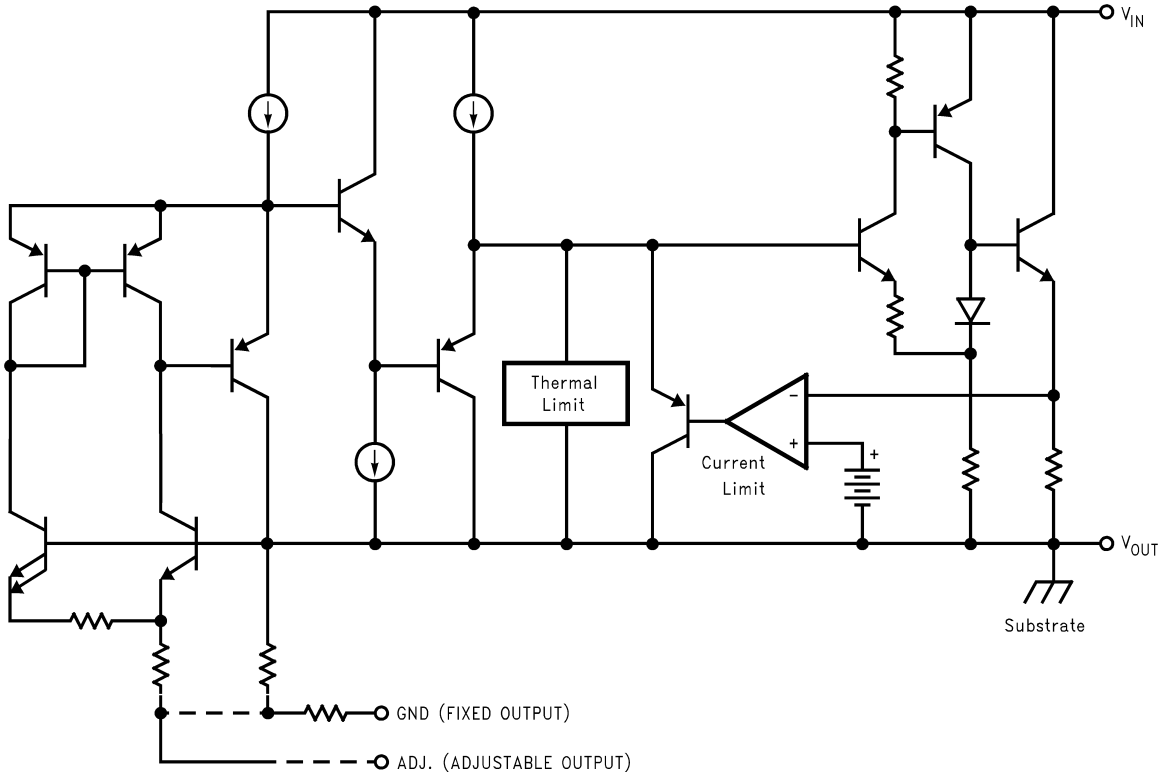

10091901

Connection Diagrams

SOT-223

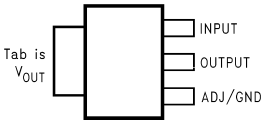

10091904

Top View

TO-220

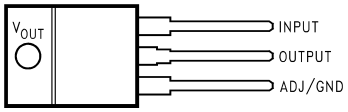

10091902

Top View

TO-252

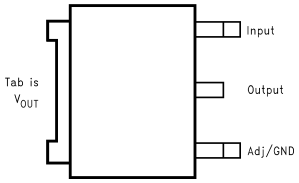

10091938

Top View

TO-263

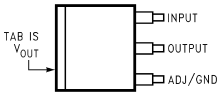

10091944

Top View

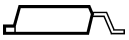

10091945

Side View

LLP

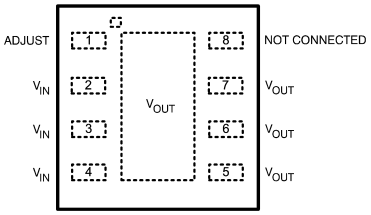

10091946

When using the LLP package
Pins 2, 3 & 4 must be connected together and
Pins 5, 6 & 7 must be connected together

Top View

Absolute Maximum Ratings (Note 1)

If Military/Aerospace specified devices are required, please contact the National Semiconductor Sales Office/ Distributors for availability and specifications.

Maximum Input Voltage (V_{IN} to GND)	20V
Power Dissipation (Note 2)	Internally Limited
Junction Temperature (T_J) (Note 2)	150˚C
Storage Temperature Range	-65˚C to 150˚C
Lead Temperature	
TO-220 (T) Package	260˚C, 10 sec
SOT-223 (IMP) Package	260˚C, 4 sec
ESD Tolerance (Note 3)	2000V

Operating Ratings (Note 1)

Input Voltage (V_{IN} to GND)	15V
Junction Temperature Range (T_J)(Note 2)	
LM1117	0˚C to 125˚C
LM1117I	–40˚C to 125˚C

LM1117 Electrical Characteristics

Typicals and limits appearing in normal type apply for T_J = 25˚C. Limits appearing in **Boldface** type apply over the entire junction temperature range for operation, 0˚C to 125˚C.

Symbol	Parameter	Conditions	Min (Note 5)	Typ (Note 4)	Max (Note 5)	Units
V_{REF}	Reference Voltage	LM1117-ADJ				
		I_{OUT} = 10mA, V_{IN}-V_{OUT} = 2V, T_J = 25˚C	1.238	1.250	1.262	V
		10mA ≤ I_{OUT} ≤ 800mA, 1.4V ≤ V_{IN}-V_{OUT} ≤ 10V	**1.225**	1.250	**1.270**	V
V_{OUT}	Output Voltage	LM1117-1.8				
		I_{OUT} = 10mA, V_{IN} = 3.8V, T_J = 25˚C	1.782	1.800	1.818	V
		0 ≤ I_{OUT} ≤ 800mA, 3.2V ≤ V_{IN} ≤ 10V	**1.746**	1.800	**1.854**	V
		LM1117-2.5				
		I_{OUT} = 10mA, V_{IN} = 4.5V, T_J = 25˚C	2.475	2.500	2.525	V
		0 ≤ I_{OUT} ≤ 800mA, 3.9V ≤ V_{IN} ≤ 10V	**2.450**	2.500	**2.550**	V
		LM1117-2.85				
		I_{OUT} = 10mA, V_{IN} = 4.85V, T_J = 25˚C	2.820	2.850	2.880	V
		0 ≤ I_{OUT} ≤ 800mA, 4.25V ≤ V_{IN} ≤ 10V	**2.790**	2.850	**2.910**	V
		0 ≤ I_{OUT} ≤ 500mA, V_{IN} = 4.10V	**2.790**	2.850	**2.910**	V
		LM1117-3.3				
		I_{OUT} = 10mA, V_{IN} = 5V T_J = 25˚C	3.267	3.300	3.333	V
		0 ≤ I_{OUT} ≤ 800mA, 4.75V≤ V_{IN} ≤ 10V	**3.235**	3.300	**3.365**	V
		LM1117-5.0				
		I_{OUT} = 10mA, V_{IN} = 7V, T_J = 25˚C	4.950	5.000	5.050	V
		0 ≤ I_{OUT} ≤ 800mA, 6.5V ≤ V_{IN} ≤ 12V	**4.900**	5.000	**5.100**	V
ΔV_{OUT}	Line Regulation (Note 6)	LM1117-ADJ				
		I_{OUT} = 10mA, 1.5V ≤ V_{IN}-V_{OUT} ≤ 13.75V		0.035	**0.2**	%
		LM1117-1.8		1	**6**	mV
		I_{OUT} = 0mA, 3.2V ≤ V_{IN} ≤ 10V				
		LM1117-2.5		1	**6**	mV
		I_{OUT} = 0mA, 3.9V ≤ V_{IN} ≤ 10V				
		LM1117-2.85				
		I_{OUT} = 0mA, 4.25V ≤ V_{IN} ≤ 10V		1	**6**	mV
		LM1117-3.3				
		I_{OUT} = 0mA, 4.75V ≤ V_{IN} ≤ 15V		1	**6**	mV
		LM1117-5.0				
		I_{OUT} = 0mA, 6.5V ≤ V_{IN} ≤ 15V		1	**10**	mV

LM1117 Electrical Characteristics (Continued)

Typicals and limits appearing in normal type apply for T_J = 25˚C. Limits appearing in **Boldface** type apply over the entire junction temperature range for operation, 0˚C to 125˚C.

Symbol	Parameter	Conditions	Min (Note 5)	Typ (Note 4)	Max (Note 5)	Units
ΔV_{OUT}	Load Regulation (Note 6)	LM1117-ADJ V_{IN}-V_{OUT} = 3V, 10 ≤ I_{OUT} ≤ 800mA		0.2	**0.4**	%
		LM1117-1.8 V_{IN} = 3.2V, 0 ≤ I_{OUT} ≤ 800mA		1	**10**	mV
		LM1117-2.5 V_{IN} = 3.9V, 0 ≤ I_{OUT} ≤ 800mA		1	**10**	mV
		LM1117-2.85 V_{IN} = 4.25V, 0 ≤ I_{OUT} ≤ 800mA		1	**10**	mV
		LM1117-3.3 V_{IN} = 4.75V, 0 ≤ I_{OUT} ≤ 800mA		1	**10**	mV
		LM1117-5.0 V_{IN} = 6.5V, 0 ≤ I_{OUT} ≤ 800mA		1	**15**	mV
V_{IN}-V_{OUT}	Dropout Voltage (Note 7)	I_{OUT} = 100mA		1.10	**1.20**	V
		I_{OUT} = 500mA		1.15	**1.25**	V
		I_{OUT} = 800mA		1.20	**1.30**	V
I_{LIMIT}	Current Limit	V_{IN}-V_{OUT} = 5V, T_J = 25˚C	800	1200	1500	mA
	Minimum Load Current (Note 8)	LM1117-ADJ V_{IN} = 15V		1.7	**5**	mA
	Quiescent Current	LM1117-1.8 V_{IN} ≤ 15V		5	**10**	mA
		LM1117-2.5 V_{IN} ≤ 15V		5	**10**	mA
		LM1117-2.85 V_{IN} ≤ 10V		5	**10**	mA
		LM1117-3.3 V_{IN} ≤ 15V		5	**10**	mA
		LM1117-5.0 V_{IN} ≤ 15V		5	**10**	mA
	Thermal Regulation	T_A = 25˚C, 30ms Pulse		0.01	0.1	%/W
	Ripple Regulation	f_{RIPPLE} =1 20Hz, V_{IN}-V_{OUT} = 3V V_{RIPPLE} = $1V_{PP}$	**60**	75		dB
	Adjust Pin Current			60	**120**	µA
	Adjust Pin Current Change	10 ≤ I_{OUT}≤ 800mA, 1.4V ≤ V_{IN}-V_{OUT} ≤ 10V		0.2	**5**	µA
	Temperature Stability			0.5		%
	Long Term Stability	T_A = 125˚C, 1000Hrs		0.3		%
	RMS Output Noise	(% of V_{OUT}), 10Hz ≤ f ≤10kHz		0.003		%
	Thermal Resistance Junction-to-Case	3-Lead SOT-223		15.0		˚C/W
		3-Lead TO-220		3.0		˚C/W
		3-Lead TO-252		10		˚C/W
	Thermal Resistance Junction-to-Ambient (No air flow)	3-Lead SOT-223 (No heat sink)		136		˚C/W
		3-Lead TO-220 (No heat sink)		79		˚C/W
		3-Lead TO-252 (Note 9) (No heat sink)		92		˚C/W
		3-Lead TO-263		55		˚C/W
		8-Lead LLP(Note 10)		40		˚C/W

LM1117I Electrical Characteristics

Typicals and limits appearing in normal type apply for T_J = 25˚C. Limits appearing in **Boldface** type apply over the entire junction temperature range for operation, –40˚C to 125˚C.

Symbol	Parameter	Conditions	Min (Note 5)	Typ (Note 4)	Max (Note 5)	Units
V_{REF}	Reference Voltage	LM1117I-ADJ				
		I_{OUT} = 10mA, V_{IN}-V_{OUT} = 2V, T_J = 25˚C	1.238	1.250	1.262	V
		10mA ≤ I_{OUT} ≤ 800mA, 1.4V ≤ V_{IN}-V_{OUT} ≤ 10V	**1.200**	1.250	**1.290**	V
V_{OUT}	Output Voltage	LM1117I-3.3				
		I_{OUT} = 10mA, V_{IN} = 5V, T_J = 25˚C	3.267	3.300	3.333	V
		0 ≤ I_{OUT} ≤ 800mA, 4.75V ≤ V_{IN} ≤ 10V	**3.168**	3.300	**3.432**	V
		LM1117I-5.0				
		I_{OUT} = 10mA, V_{IN} = 7V, T_J = 25˚C	4.950	5.000	5.050	V
		0 ≤ I_{OUT} ≤ 800mA, 6.5V ≤ V_{IN} ≤ 12V	**4.800**	5.000	**5.200**	V
ΔV_{OUT}	Line Regulation (Note 6)	LM1117I-ADJ				
		I_{OUT} = 10mA, 1.5V ≤ V_{IN}-V_{OUT} ≤ 13.75V		0.035	**0.3**	%
		LM1117I-3.3				
		I_{OUT} = 0mA, 4.75V ≤ V_{IN} ≤ 15V		1	**10**	mV
		LM1117I-5.0				
		I_{OUT} = 0mA, 6.5V ≤ V_{IN} ≤ 15V		1	**15**	mV
ΔV_{OUT}	Load Regulation (Note 6)	LM1117I-ADJ				
		V_{IN}-V_{OUT} = 3V, 10 ≤ I_{OUT} ≤ 800mA		0.2	**0.5**	%
		LM1117I-3.3				
		V_{IN} = 4.75V, 0 ≤ I_{OUT} ≤ 800mA		1	**15**	mV
		LM1117I-5.0				
		V_{IN} = 6.5V, 0 ≤ I_{OUT} ≤ 800mA		1	**20**	mV
V_{IN}-V_{OUT}	Dropout Voltage (Note 7)	I_{OUT} = 100mA		1.10	**1.30**	V
		I_{OUT} = 500mA		1.15	**1.35**	V
		I_{OUT} = 800mA		1.20	**1.40**	V
I_{LIMIT}	Current Limit	V_{IN}-V_{OUT} = 5V, T_J = 25˚C	800	1200	1500	mA
	Minimum Load Current (Note 8)	LM1117I-ADJ				
		V_{IN} = 15V		1.7	**5**	mA
	Quiescent Current	LM1117I-3.3				
		V_{IN} ≤ 15V		5	**15**	mA
		LM1117I-5.0				
		V_{IN} ≤ 15V		5	**15**	mA
	Thermal Regulation	T_A = 25˚C, 30ms Pulse		0.01	0.1	%/W
	Ripple Regulation	f_{RIPPLE} =1 20Hz, V_{IN}-V_{OUT} = 3V V_{RIPPLE} = 1V_{PP}	**60**	75		dB
	Adjust Pin Current			60	**120**	µA
	Adjust Pin Current Change	10 ≤ I_{OUT}≤ 800mA, 1.4V ≤ V_{IN}-V_{OUT} ≤ 10V		0.2	**10**	µA
	Temperature Stability			0.5		%
	Long Term Stability	T_A = 125˚C, 1000Hrs		0.3		%
	RMS Output Noise	(% of V_{OUT}), 10Hz ≤ f ≤10kHz		0.003		%
	Thermal Resistance Junction-to-Case	3-Lead SOT-223		15.0		˚C/W
		3-Lead TO-252		10		˚C/W
	Thermal Resistance Junction-to-Ambient No air flow)	3-Lead SOT-223 (No heat sink)		136		˚C/W
		3-Lead TO-252 (No heat sink)(Note 9)		92		˚C/W
		8-Lead LLP(Note 10)		40		˚C/W

Note 1: Absolute Maximum Ratings indicate limits beyond which damage to the device may occur. Operating Ratings indicate conditions for which the device is intended to be functional, but specific performance is not guaranteed. For guaranteed specifications and the test conditions, see the Electrical Characteristics.

Note 2: The maximum power dissipation is a function of $T_{J(max)}$, θ_{JA}, and T_A. The maximum allowable power dissipation at any ambient temperature is $P_D = (T_{J(max)}-T_A)/\theta_{JA}$. All numbers apply for packages soldered directly into a PC board.

Note 3: For testing purposes, ESD was applied using human body model, 1.5kΩ in series with 100pF.

Note 4: Typical Values represent the most likely parametric norm.

Note 5: All limits are guaranteed by testing or statistical analysis.

Note 6: Load and line regulation are measured at constant junction room temperature.

Note 7: The dropout voltage is the input/output differential at which the circuit ceases to regulate against further reduction in input voltage. It is measured when the output voltage has dropped 100mV from the nominal value obtained at $V_{IN} = V_{OUT}$ +1.5V.

Note 8: The minimum output current required to maintain regulation.

Note 9: Minimum pad size of 0.038in^2

Note 10: Thermal Performance for the LLP was obtained using JESD51-7 board with six vias and an ambient temperature of 22˚C. For information about improved thermal performance and power dissipation for the LLP, refer to Application Note AN-1187.

Typical Performance Characteristics

Dropout Voltage (V_{IN}-V_{OUT})

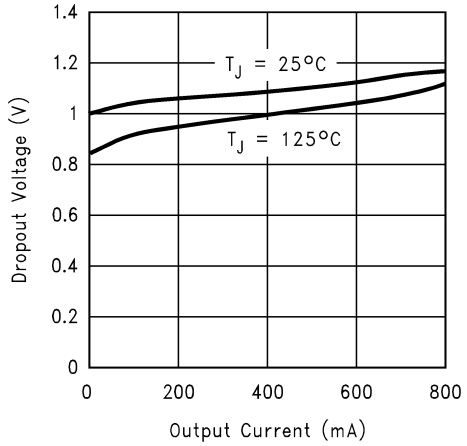

10091922

Short-Circuit Current

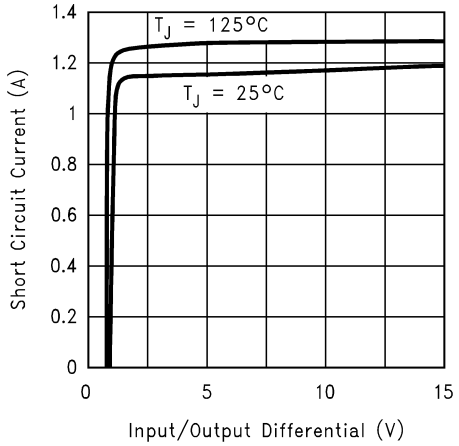

10091923

Load Regulation

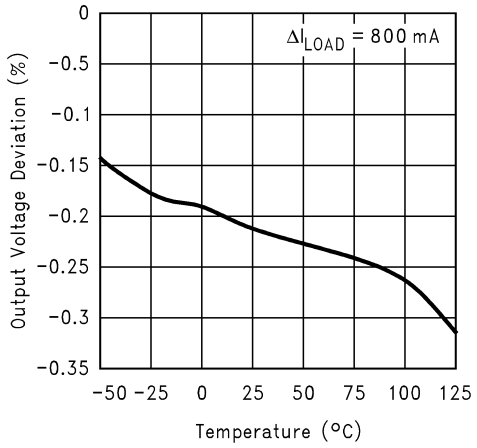

10091943

LM1117-ADJ Ripple Rejection

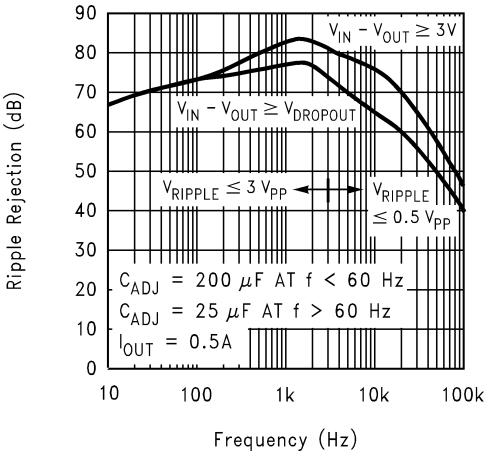

10091906

Typical Performance Characteristics (Continued)

LM1117-ADJ Ripple Rejection vs. Current

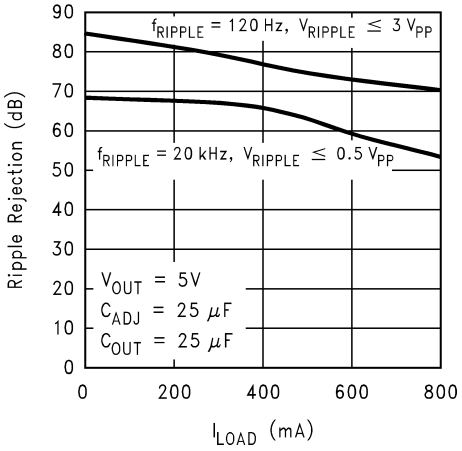

10091907

Temperature Stability

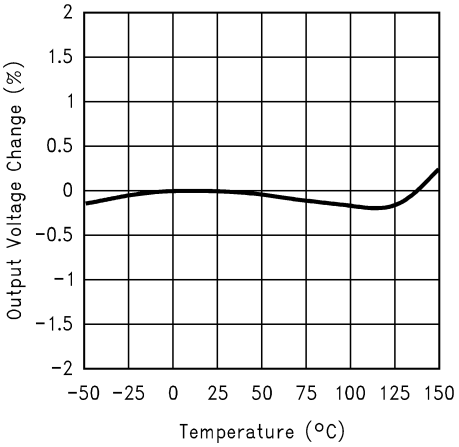

10091925

Adjust Pin Current

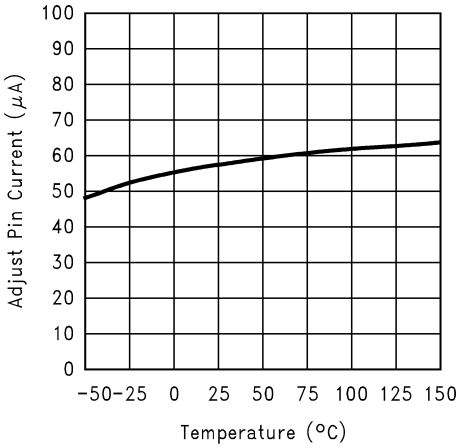

10091926

LM1117-2.85 Load Transient Response

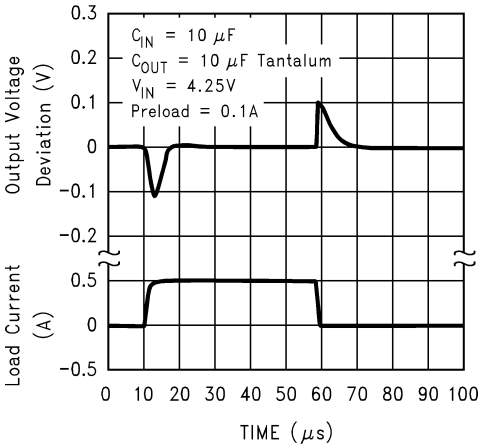

10091908

LM1117-5.0 Load Transient Response

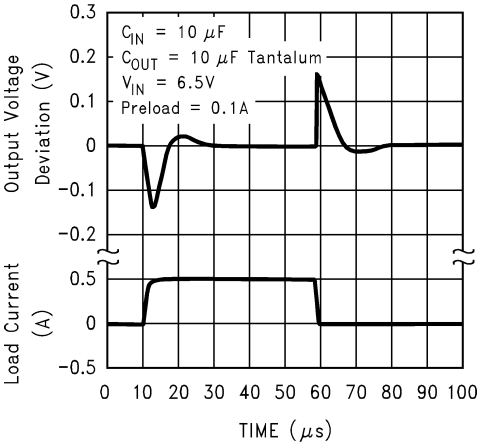

10091909

LM1117-2.85 Line Transient Response

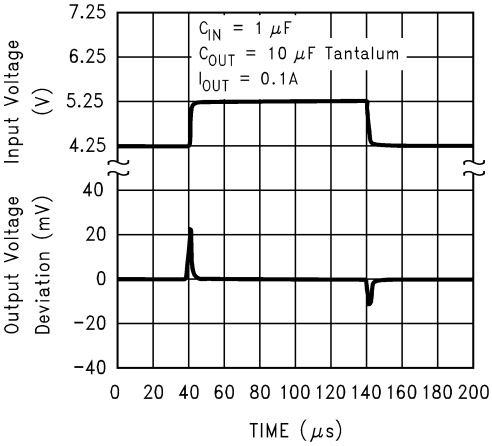

10091910

Typical Performance Characteristics (Continued)

LM1117-5.0 Line Transient Response

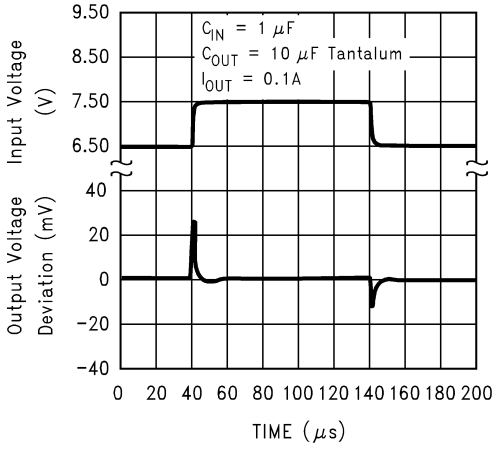

Application Note

1.0 External Capacitors/Stability

1.1 Input Bypass Capacitor

An input capacitor is recommended. A 10μF tantalum on the input is a suitable input bypassing for almost all applications.

1.2 Adjust Terminal Bypass Capacitor

The adjust terminal can be bypassed to ground with a bypass capacitor (C_{ADJ}) to improve ripple rejection. This bypass capacitor prevents ripple from being amplified as the output voltage is increased. At any ripple frequency, the impedance of the C_{ADJ} should be less than R1 to prevent the ripple from being amplified:

$$1/(2\pi * f_{RIPPLE} * C_{ADJ}) < R1$$

The R1 is the resistor between the output and the adjust pin. Its value is normally in the range of 100-200Ω. For example, with R1 = 124Ω and f_{RIPPLE} = 120Hz, the C_{ADJ} should be > 11μF.

1.3 Output Capacitor

The output capacitor is critical in maintaining regulator stability, and must meet the required conditions for both minimum amount of capacitance and ESR (Equivalent Series Resistance). The minimum output capacitance required by the LM1117 is 10μF, if a tantalum capacitor is used. Any increase of the output capacitance will merely improve the loop stability and transient response. The ESR of the output capacitor should range between 0.3Ω - 22Ω. In the case of the adjustable regulator, when the C_{ADJ} is used, a larger output capacitance (22μf tantalum) is required.

2.0 Output Voltage

The LM1117 adjustable version develops a 1.25V reference voltage, V_{REF}, between the output and the adjust terminal. As shown in *Figure 1*, this voltage is applied across resistor R1 to generate a constant current I1. The current I_{ADJ} from the adjust terminal could introduce error to the output. But since it is very small (60μA) compared with the I1 and very constant with line and load changes, the error can be ignored. The constant current I1 then flows through the output set resistor R2 and sets the output voltage to the desired level.

For fixed voltage devices, R1 and R2 are integrated inside the devices.

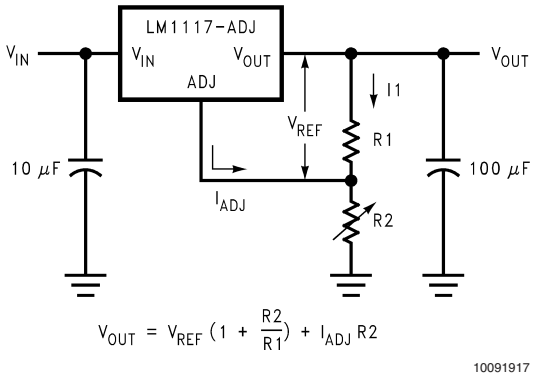

FIGURE 1. Basic Adjustable Regulator

3.0 Load Regulation

The LM1117 regulates the voltage that appears between its output and ground pins, or between its output and adjust pins. In some cases, line resistances can introduce errors to the voltage across the load. To obtain the best load regulation, a few precautions are needed.

Figure 2, shows a typical application using a fixed output regulator. The Rt1 and Rt2 are the line resistances. It is obvious that the V_{LOAD} is less than the V_{OUT} by the sum of the voltage drops along the line resistances. In this case, the load regulation seen at the R_{LOAD} would be degraded from the data sheet specification. To improve this, the load should be tied directly to the output terminal on the positive side and directly tied to the ground terminal on the negative side.

Application Note (Continued)

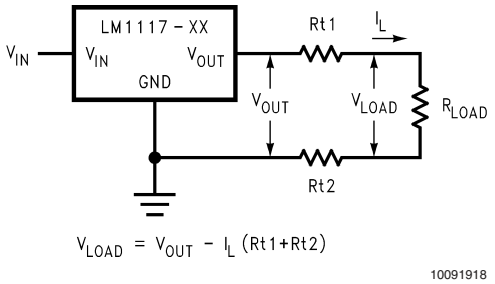

FIGURE 2. Typical Application using Fixed Output Regulator

When the adjustable regulator is used (*Figure 3*), the best performance is obtained with the positive side of the resistor R1 tied directly to the output terminal of the regulator rather than near the load. This eliminates line drops from appearing effectively in series with the reference and degrading regulation. For example, a 5V regulator with 0.05Ω resistance between the regulator and load will have a load regulation due to line resistance of 0.05Ω x I_L. If R1 (=125Ω) is connected near the load, the effective line resistance will be 0.05Ω (1+R2/R1) or in this case, it is 4 times worse. In addition, the ground side of the resistor R2 can be returned near the ground of the load to provide remote ground sensing and improve load regulation.

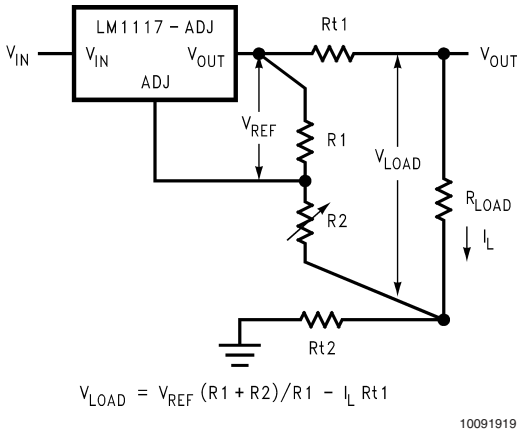

FIGURE 3. Best Load Regulation using Adjustable Output Regulator

4.0 Protection Diodes

Under normal operation, the LM1117 regulators do not need any protection diode. With the adjustable device, the internal resistance between the adjust and output terminals limits the current. No diode is needed to divert the current around the regulator even with capacitor on the adjust terminal. The adjust pin can take a transient signal of ±25V with respect to the output voltage without damaging the device.

When a output capacitor is connected to a regulator and the input is shorted to ground, the output capacitor will discharge into the output of the regulator. The discharge current depends on the value of the capacitor, the output voltage of the regulator, and rate of decrease of V_{IN}. In the LM1117 regulators, the internal diode between the output and input pins can withstand microsecond surge currents of 10A to 20A. With an extremely large output capacitor (≥1000 µF), and with input instantaneously shorted to ground, the regulator could be damaged.

In this case, an external diode is recommended between the output and input pins to protect the regulator, as shown in *Figure 4*.

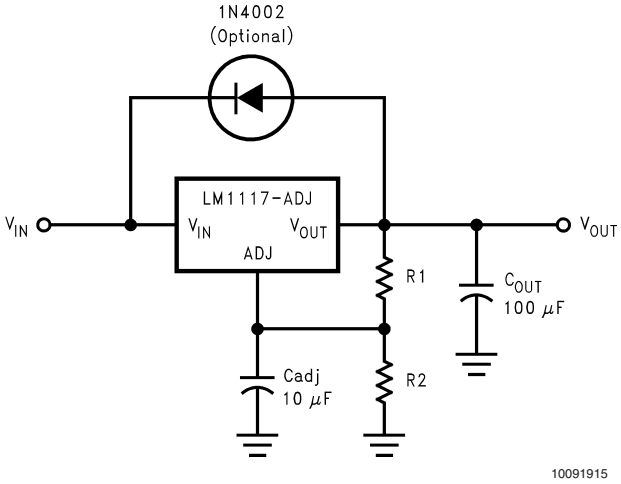

FIGURE 4. Regulator with Protection Diode

5.0 Heatsink Requirements

When an integrated circuit operates with an appreciable current, its junction temperature is elevated. It is important to quantify its thermal limits in order to achieve acceptable performance and reliability. This limit is determined by summing the individual parts consisting of a series of temperature rises from the semiconductor junction to the operating environment. A one-dimensional steady-state model of conduction heat transfer is demonstrated in *Figure 5*. The heat generated at the device junction flows through the die to the die attach pad, through the lead frame to the surrounding case material, to the printed circuit board, and eventually to the ambient environment. Below is a list of variables that may affect the thermal resistance and in turn the need for a heatsink.

$R^{\theta}JC$ (Component Variables)	R^{θ} CA (Application Variables)
Leadframe Size & Material	Mounting Pad Size, Material, & Location
No. of Conduction Pins	Placement of Mounting Pad
Die Size	PCB Size & Material
Die Attach Material	Traces Length & Width
Molding Compound Size and Material	Adjacent Heat Sources
	Volume of Air
	Ambient Temperatue
	Shape of Mounting Pad

Application Note (Continued)

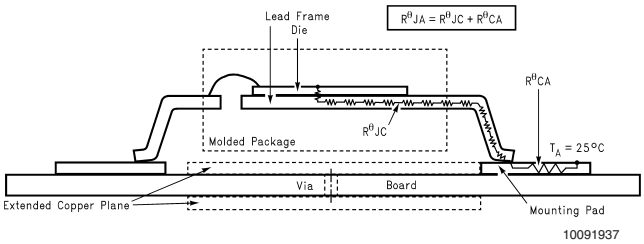

FIGURE 5. Cross-sectional view of Integrated Circuit Mounted on a printed circuit board. Note that the case temperature is measured at the point where the leads contact with the mounting pad surface

The LM1117 regulators have internal thermal shutdown to protect the device from over-heating. Under all possible operating conditions, the junction temperature of the LM1117 must be within the range of 0˚C to 125˚C. A heatsink may be required depending on the maximum power dissipation and maximum ambient temperature of the application. To determine if a heatsink is needed, the power dissipated by the regulator, P_D , must be calculated:

$I_{IN} = I_L + I_G$

$P_D = (V_{IN}-V_{OUT})I_L + V_{IN}I_G$

Figure 6 shows the voltages and currents which are present in the circuit.

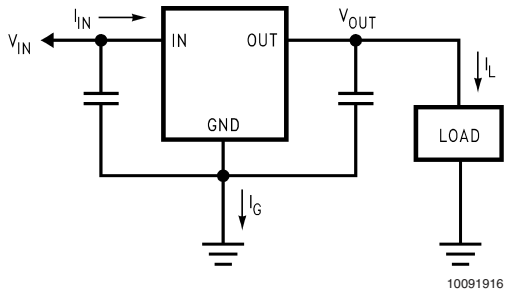

FIGURE 6. Power Dissipation Diagram

The next parameter which must be calculated is the maximum allowable temperature rise, T_R(max):

$T_R(max) = T_J(max)-T_A(max)$

where T_J(max) is the maximum allowable junction temperature (125˚C), and T_A(max) is the maximum ambient temperature which will be encountered in the application.

Using the calculated values for T_R(max) and P_D, the maximum allowable value for the junction-to-ambient thermal resistance (θ_{JA}) can be calculated:

$\theta_{JA} = T_R(max)/P_D$

If the maximum allowable value for θ_{JA} is found to be ≥136˚C/W for SOT-223 package or ≥79˚C/W for TO-220 package or ≥92˚C/W for TO-252 package, no heatsink is needed since the package alone will dissipate enough heat to satisfy these requirements. If the calculated value for θ_{JA} falls below these limits, a heatsink is required.

As a design aid, *Table 1* shows the value of the θ_{JA} of SOT-223 and TO-252 for different heatsink area. The copper patterns that we used to measure these θ_{JA}s are shown at the end of the Application Notes Section. *Figure 7* and *Figure 8* reflects the same test results as what are in the *Table 1*

Figure 9 and *Figure 10* shows the maximum allowable power dissipation vs. ambient temperature for the SOT-223 and TO-252 device. Figures *Figure 11* and *Figure 12* shows the maximum allowable power dissipation vs. copper area (in^2) for the SOT-223 and TO-252 devices. Please see AN1028 for power enhancement techniques to be used with SOT-223 and TO-252 packages.

*Application Note AN-1187 discusses improved thermal performance and power dissipation for the LLP.

TABLE 1. θ_{JA} Different Heatsink Area

Layout	Copper Area		Thermal Resistance	
	Top Side (in^2)*	Bottom Side (in^2)	(θ_{JA},˚C/W) SOT-223	(θ_{JA},˚C/W) TO-252
1	0.0123	0	136	103
2	0.066	0	123	87
3	0.3	0	84	60
4	0.53	0	75	54
5	0.76	0	69	52
6	1	0	66	47
7	0	0.2	115	84
8	0	0.4	98	70
9	0	0.6	89	63
10	0	0.8	82	57
11	0	1	79	57
12	0.066	0.066	125	89
13	0.175	0.175	93	72

Application Note (Continued)

TABLE 1. θ_{JA} Different Heatsink Area (Continued)

Layout	Copper Area		Thermal Resistance	
14	0.284	0.284	83	61
15	0.392	0.392	75	55
16	0.5	0.5	70	53

*Tab of device attached to topside copper

Application Note (Continued)

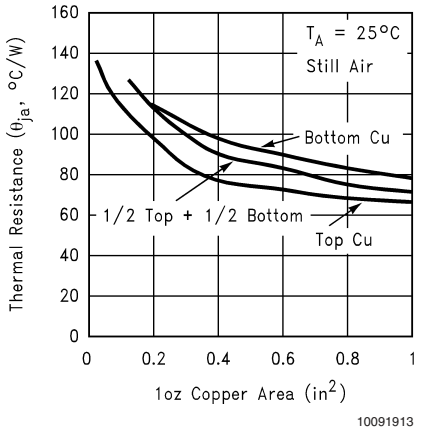

FIGURE 7. θ_{JA} vs. 1oz Copper Area for SOT-223

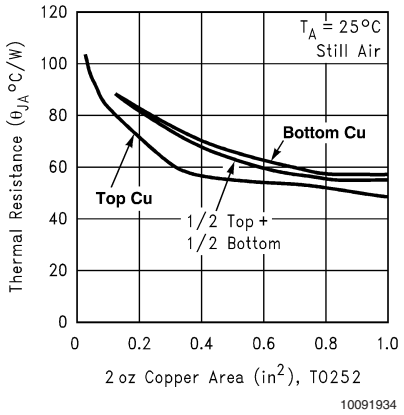

FIGURE 8. θ_{JA} vs. 2oz Copper Area for TO-252

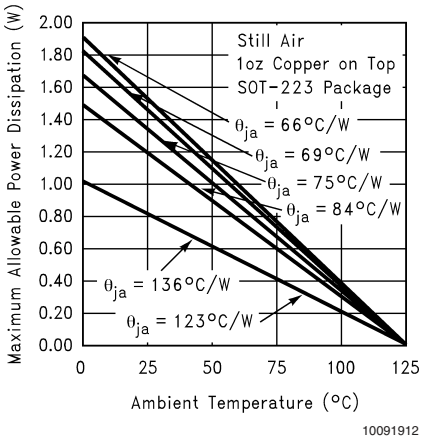

FIGURE 9. Maximum Allowable Power Dissipation vs. Ambient Temperature for SOT-223

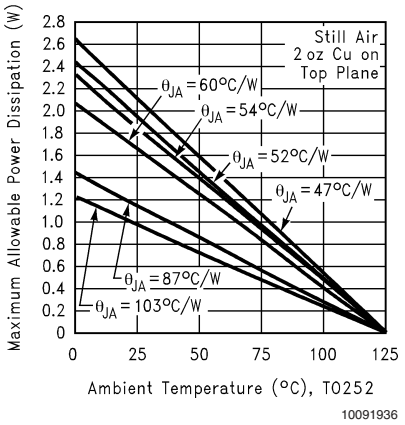

FIGURE 10. Maximum Allowable Power Dissipation vs. Ambient Temperature for TO-252

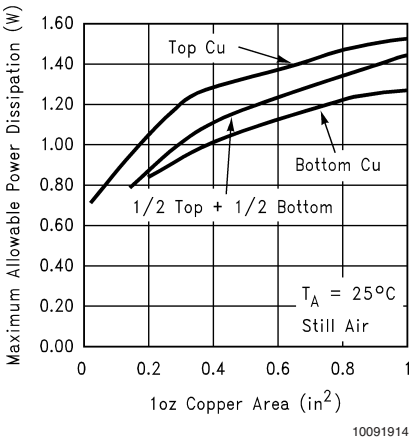

FIGURE 11. Maximum Allowable Power Dissipation vs. 1oz Copper Area for SOT-223

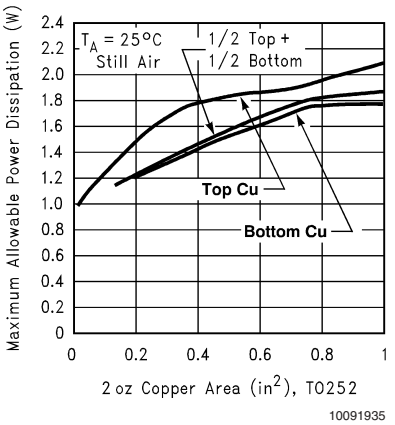

FIGURE 12. Maximum Allowable Power Dissipation vs. 2oz Copper Area for TO-252

Application Note (Continued)

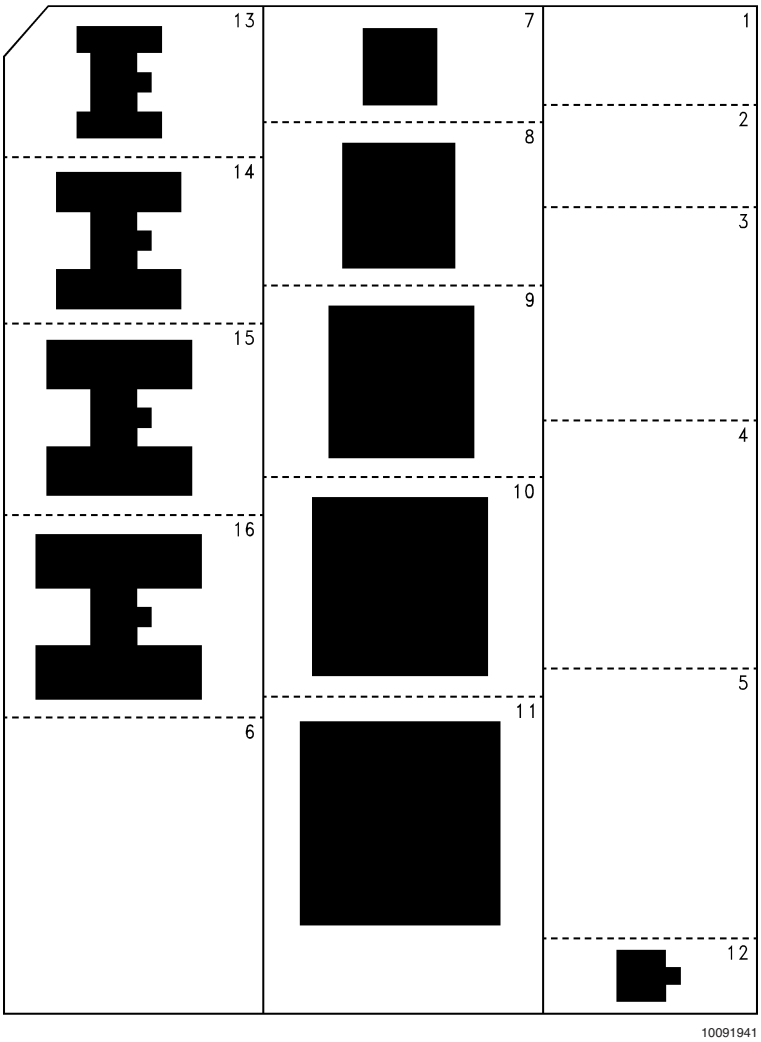

FIGURE 13. Top View of the Thermal Test Pattern in Actual Scale

Application Note (Continued)

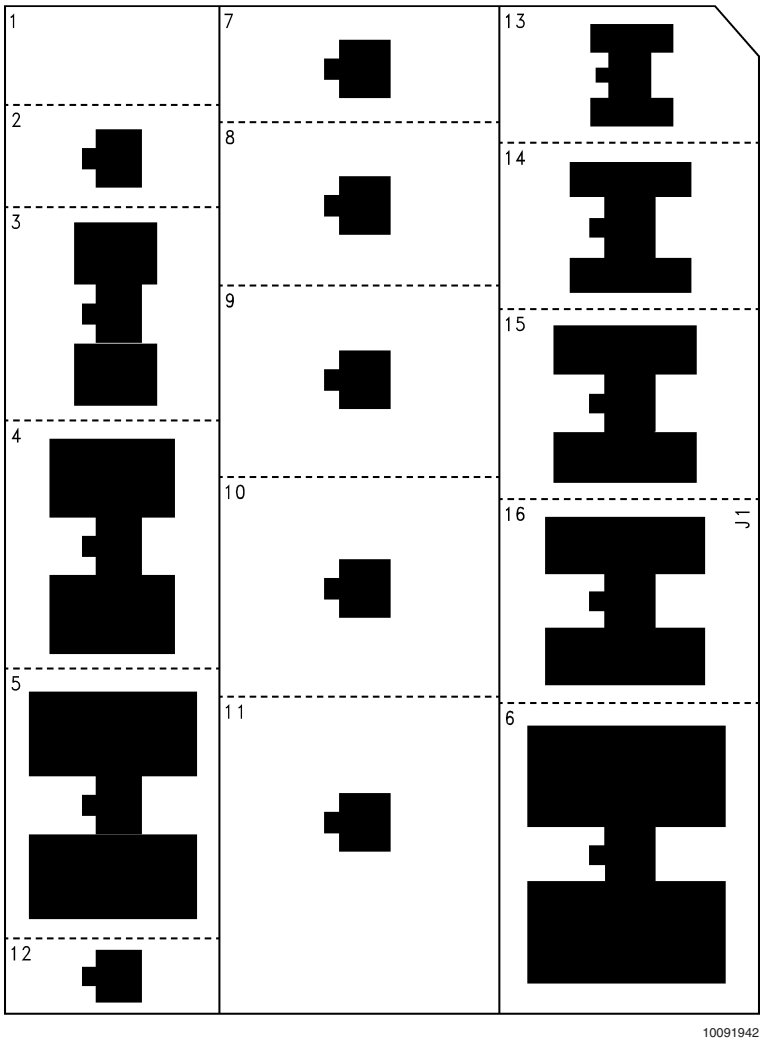

FIGURE 14. Bottom View of the Thermal Test Pattern in Actual Scale

Typical Application Circuits

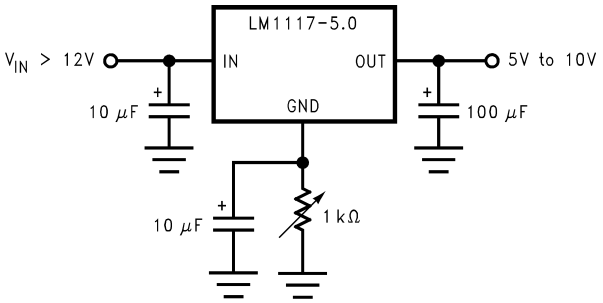

10091930

Adjusting Output of Fixed Regulators

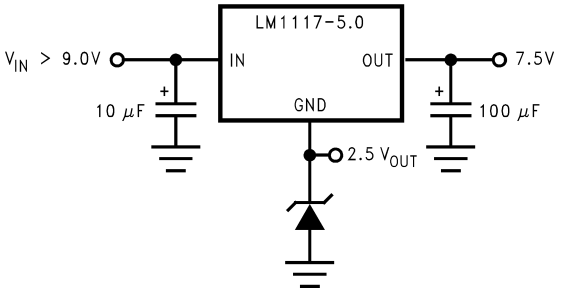

10091931

Regulator with Reference

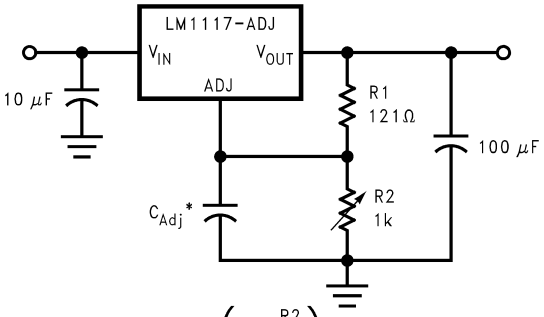

$$V_{OUT} = 1.25 \left(1 + \frac{R2}{R1}\right)$$

* C_{Adj} is optional, however it will improve ripple rejection.

10091929

1.25V to 10V Adjustable Regulator with Improved Ripple Rejection

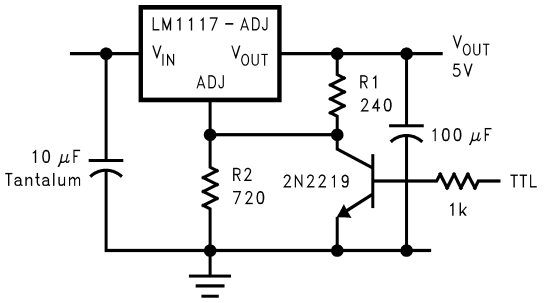

* Min. output ≈ 1.25V

10091927

5V Logic Regulator with Electronic Shutdown*

Typical Application Circuits (Continued)

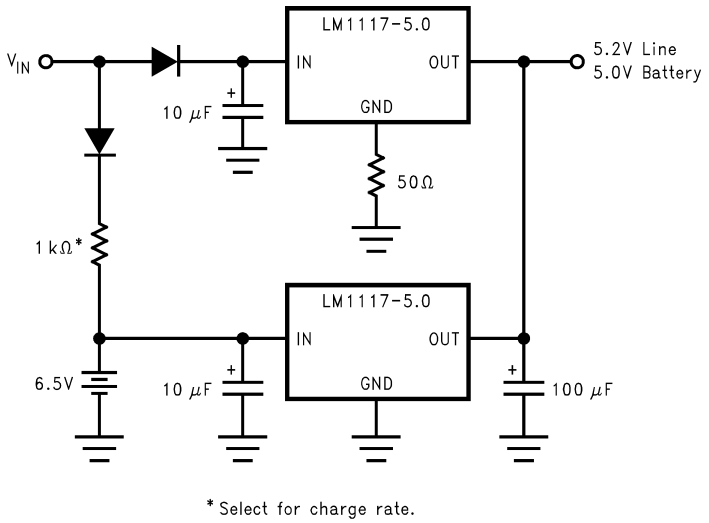

Battery Backed-Up Regulated Supply

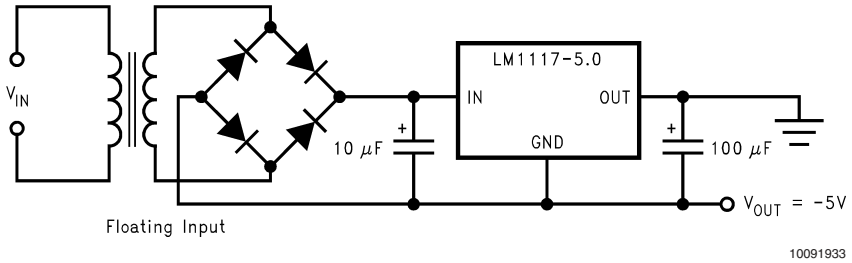

Low Dropout Negative Supply

Physical Dimensions inches (millimeters)

unless otherwise noted

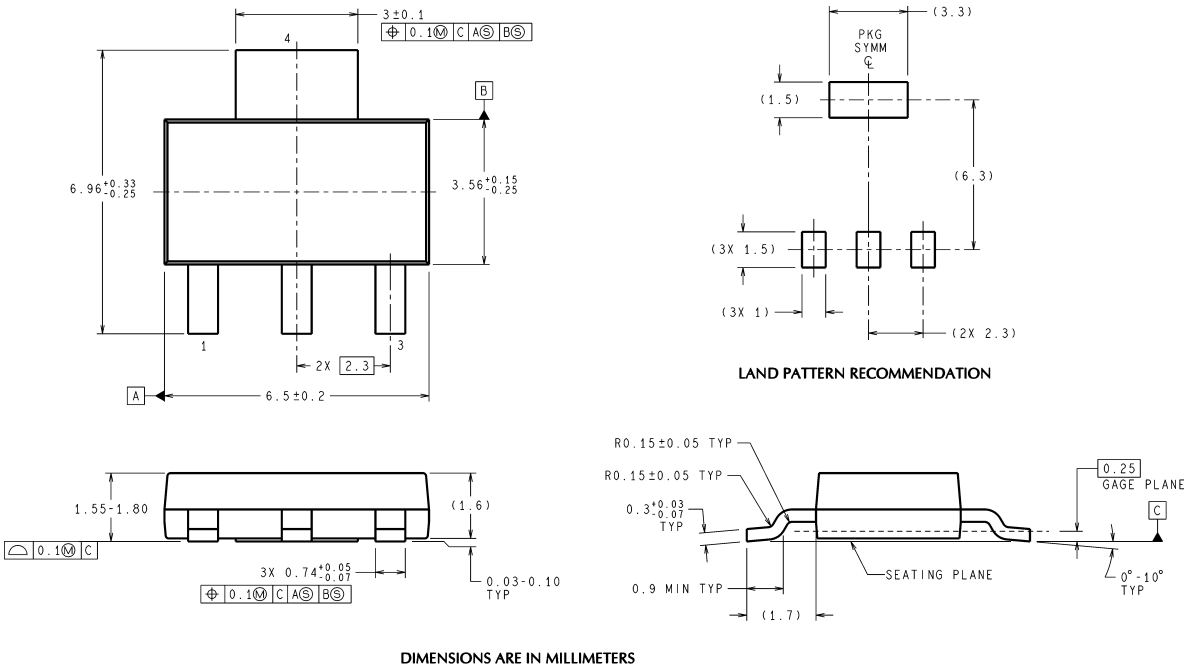

MP04A (Rev B)

3-Lead SOT-223
NS Package Number MP04A

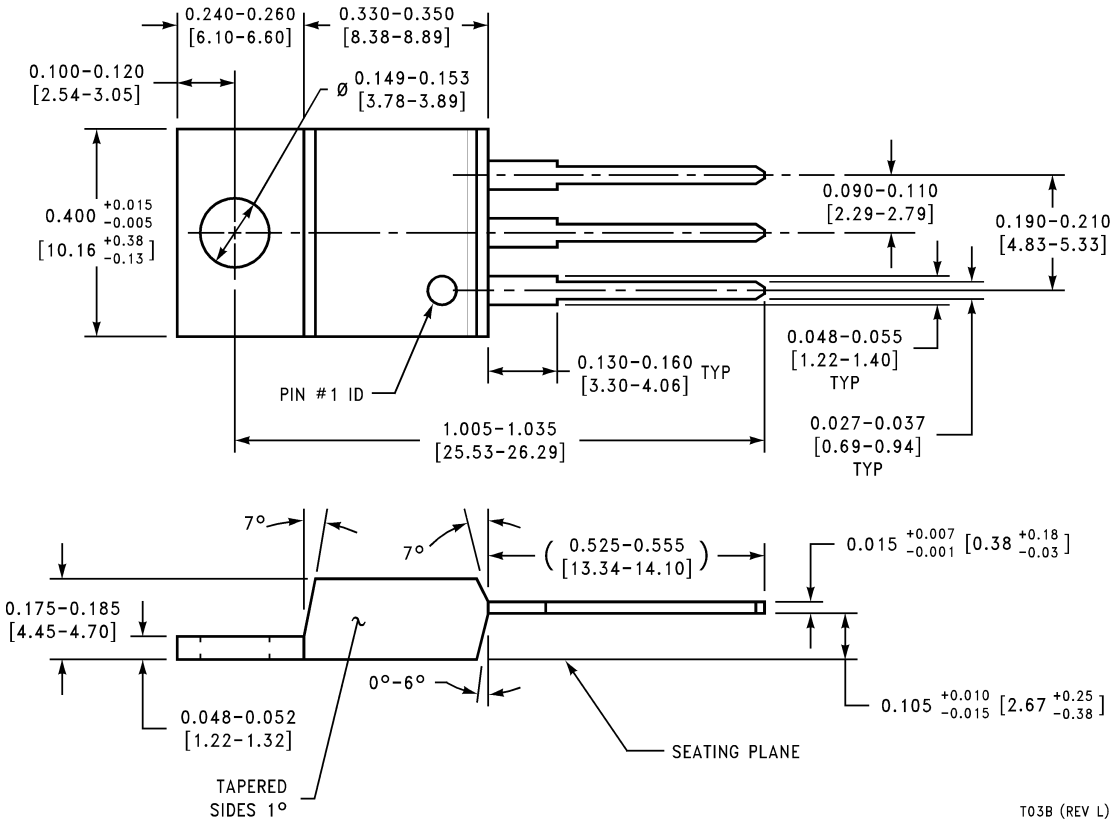

3-Lead TO-220
NS Package Number T03B

Physical Dimensions inches (millimeters) unless otherwise noted (Continued)

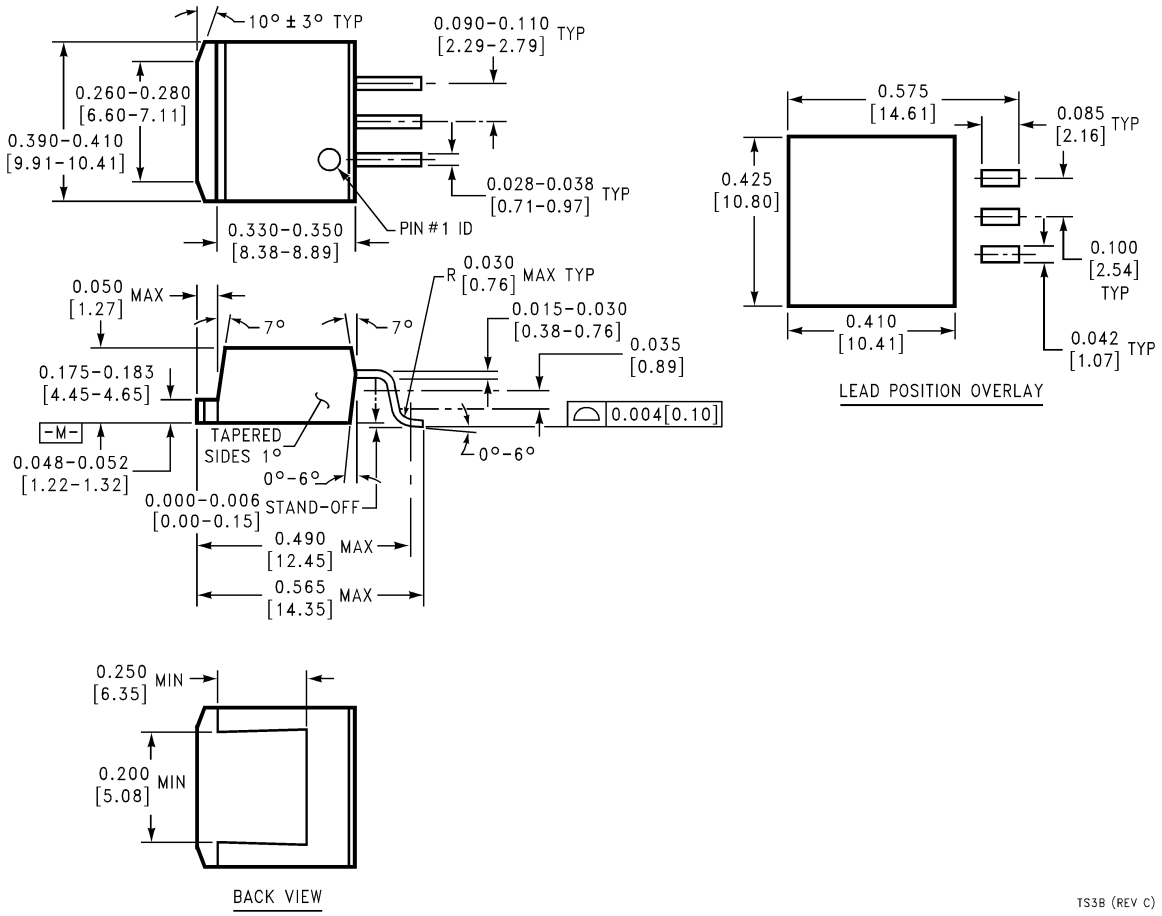

3-Lead TO-263
NS Package Number TS3B

Physical Dimensions inches (millimeters) unless otherwise noted (Continued)

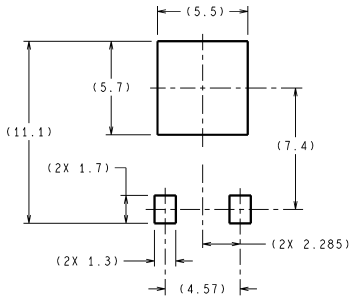

DIMENSIONS ARE IN MILLIMETERS

LAND PATTERN RECOMMENDATION

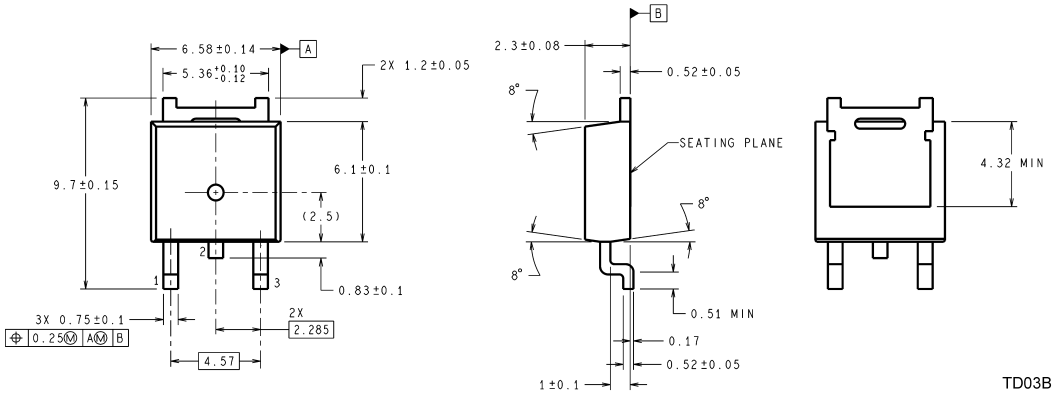

TD03B (Rev C)

3-Lead TO-252
NS Package Number TD03B

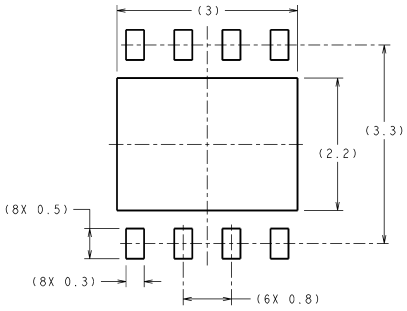

DIMENSIONS ARE IN MILLIMETERS
DIMENSIONS IN ( ) FOR REFERENCE ONLY

RECOMMENDED LAND PATTERN
1:1 RATION WITH PKG SOLDER PADS

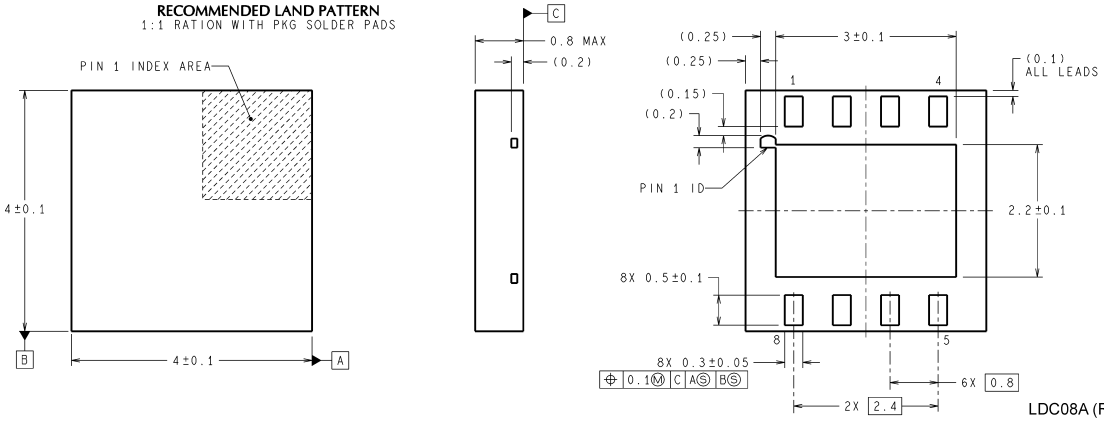

LDC08A (Rev B)

8-Lead LLP
NS Package Number LDC08A

Notes

LIFE SUPPORT POLICY

NATIONAL'S PRODUCTS ARE NOT AUTHORIZED FOR USE AS CRITICAL COMPONENTS IN LIFE SUPPORT DEVICES OR SYSTEMS WITHOUT THE EXPRESS WRITTEN APPROVAL OF THE PRESIDENT AND GENERAL COUNSEL OF NATIONAL SEMICONDUCTOR CORPORATION. As used herein:

1. Life support devices or systems are devices or systems which, (a) are intended for surgical implant into the body, or (b) support or sustain life, and whose failure to perform when properly used in accordance with instructions for use provided in the labeling, can be reasonably expected to result in a significant injury to the user.
2. A critical component is any component of a life support device or system whose failure to perform can be reasonably expected to cause the failure of the life support device or system, or to affect its safety or effectiveness.

BANNED SUBSTANCE COMPLIANCE

National Semiconductor certifies that the products and packing materials meet the provisions of the Customer Products Stewardship Specification (CSP-9-111C2) and the Banned Substances and Materials of Interest Specification (CSP-9-111S2) and contain no ''Banned Substances'' as defined in CSP-9-111S2.

National Semiconductor
Americas Customer
Support Center
Email: new.feedback@nsc.com
Tel: 1-800-272-9959

www.national.com

National Semiconductor
Europe Customer Support Center
Fax: +49 (0) 180-530 85 86
Email: europe.support@nsc.com
Deutsch Tel: +49 (0) 69 9508 6208
English Tel: +44 (0) 870 24 0 2171
Français Tel: +33 (0) 1 41 91 8790

National Semiconductor
Asia Pacific Customer
Support Center
Email: ap.support@nsc.com

National Semiconductor
Japan Customer Support Center
Fax: 81-3-5639-7507
Email: jpn.feedback@nsc.com
Tel: 81-3-5639-7560

National does not assume any responsibility for use of any circuitry described, no circuit patent licenses are implied and National reserves the right at any time without notice to change said circuitry and specifications.

О компании

ООО "ТрейдЭлектроникс" - это оперативные поставки широкого спектра электронных компонентов отечественного и импортного производства напрямую от производителей и с крупнейших мировых складов. Реализуемая нашей компанией продукция насчитывает более полумиллиона наименований.

Благодаря этому наша компания предлагает к поставке практически не ограниченный ассортимент компонентов как оптовыми, мелкооптовыми партиями, так и в розницу.

Наличие собственной эффективной системы логистики обеспечивает надежную поставку продукции по конкурентным ценам в точно указанные сроки.

Срок поставки со стоков в **Европе и Америке – от 3 до 14 дней.**

Срок поставки из **Азии – от 10 дней.**

Благодаря развитой сети поставщиков, помогаем в поиске и приобретении экзотичных или снятых с производства компонентов.

Предоставляем спец цены на элементы для создания инженерных сэмплов.

Упорный труд, качественный результат дают нам право быть уверенными в себе и надежными для наших клиентов.

Наша компания это:

- Гарантия качества поставляемой продукции
- Широкий ассортимент
- Минимальные сроки поставок
- Техническая поддержка
- Подбор комплектации
- Индивидуальный подход
- Гибкое ценообразование

Наша организация особенно сильна в поставках модулей, микросхем, пассивных компонентов, ксайленсах (XC), EPF, EPM и силовой электроники.

Большой выбор предлагаемой продукции, различные виды оплаты и доставки, позволят Вам сэкономить время и получить максимум выгоды от сотрудничества с нами!

Trade Electronics.ru

гарантия бесперебойности производства и качества выпускаемой продукции

Перечень производителей, продукцию которых мы поставляем на российский рынок

AMD
ANALOG DEVICES
BOURNS
Coilcraft
élantec Semiconductor, Inc.
HARRIS
Infineon
JRC
MICREL
MOTOROLA
nichicon
PHILIPS
ROHM
SGS-THOMSON
Sipex
TAIYO YUDEN
TOKO
ZILOG
Winbond
Allegro
ATMEL
BURR - BROWN
EXAR
HITACHI
intel
Lattice
muRata
OKI
QUALCOMM
SAMSUNG
SHARP
SONY
TDK
TOSHIBA
KYOCERA
ALTERA
AVX
CITILYST
CYPRESS
FAIRCHILD SEMICONDUCTOR
HOLTEK
International IOR Rectifier
LINEAR TECHNOLOGY
MITSUBISHI
National Semiconductor
ON Semiconductor
REALTEK
SANYO
SHINDENGEN
SGS
TECCOR
TUNDRA
XILINX
Amphenol
Bay Linear
CIRRUS LOGIC
DALLAS
FUJITSU
IDT
intersil
MAXIM
molex
NEC
Panasonic
RENESAS
SII
SIEMENS
ST
Texas Instruments
VISHAY
ZETEX SEMICONDUCTORS

Trade Electronics.ru

гарантия бесперебойности производства и качества выпускаемой продукции

С удовольствием будем прорабатывать для Вас поставки всех необходимых компонентов по текущим запросам для скорейшего выявления групп элементов, по которым сотрудничество именно с нашей компанией будет для Вас максимально выгодным!

С уважением,

Менеджер отдела продаж ООО

«Трейд Электроникс»

Шишлаков Евгений

8 (495)668-30-28 доб 169

manager28@tradeelectronics.ru

http://www.tradeelectronics.ru/