Description

GM6603 of positive adjustable and fixed regulators are designed to provide 3.0A output with low dropout voltage performance.

On-chip trimming adjusts the reference voltage to 2.0%. To work in post regulators or microprocessor power supplies where low voltage operation and fast transient response are required.

Device includes over-current protection and thermal shutdown protection as well.

Pin-to-pin compatible with LT1085 family of regulators, GM6603 is available in TO-252, TO-220, and surface-mount TO-263 packages.

Features

- **Adjustable or Fixed Output**
- **Output Current of 3.0A**
- **Dropout Voltage (typical) 1.15V @ 3.0A**
- **Typical Line Regulation 0.04%**
- **Typical Load Regulation 0.2%**
- **Fast Transient Response**
- **Current Limit Protection**
- **Thermal Shutdown Protection**

Application

Microprocessor Supply
Post Regulators for Switching Supplies
Telecommunication Systems
Printer Supplies
Motherboards

TYPICAL APPLICATION CIRCUITS

(Adjustable Version)

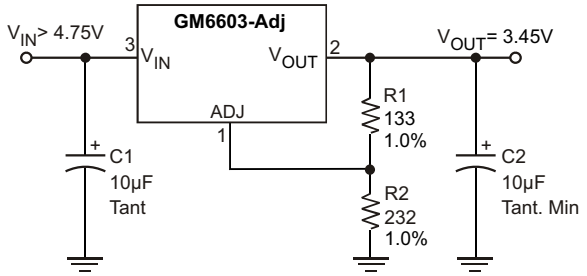

(Fixed Version)

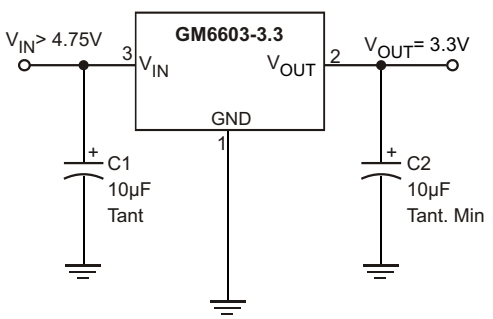

$$V_{OUT} = V_{REF} \times (1 + \frac{R2}{R1}) + I_{ADJ} \times R2$$

Notes:
1. C1 needed if device is far from filter capacitors
2. C2 minimum value required for stability

◆ MARKING INFORMATION & PIN CONFIGURATIONS(Top View)

TO-252(DPAK)

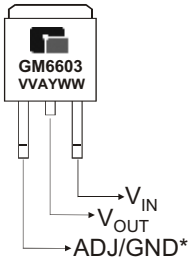

TO-220

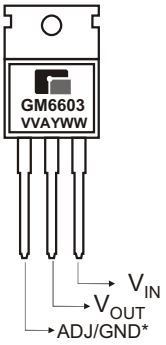

TO-263-2 (D^2PAK)

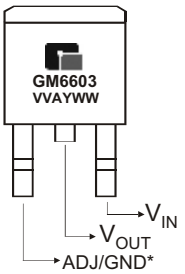

V V, V = Output Voltage(A =Adj ,33 = 3.3V)
A = Assembly Location
Y = Year
W W = Weekly

* On fixed versions Pin 1 = GND, on adjustable versions Pin 1 = ADJ
* Tab = V_{OUT}

◆ ORDERING INFORMATION

Ordering Number	Output Voltage	Package	Shipping
GM6603-ATA3T	Adj	TO-263-2	50 Units/ Tube
GM6603-ATA3R	Adj	TO-263-2	800 Units/ Tape&Reel
GM6603-ATC3T	Adj	TO-252	80 Units/ Tube
GM6603-ATC3R	Adj	TO-252	2,500 Units/ Tape & Reel
GM6603-ATB3T	Adj	TO-220	50 Units/ Tube
GM6603-1.5TA3T	1.5	TO-263-2	50 Units/ Tube
GM6603-1.5TA3R	1.5	TO-263-2	800 Units/ Tape&Reel
GM6603-1.5TB3T	1.5	TO-220	50 Units/ Tube
GM6603-1.8TA3T	1.8	TO-263-2	50 Units/ Tube
GM6603-1.8TA3R	1.8	TO-263-2	800 Units/ Tape&Reel
GM6603-1.8TC3T	1.8	TO-252	80 Units/ Tube
GM6603-1.8TC3R	1.8	TO-252	2,500 Units/ Tape & Reel
GM6603-1.8TB3T	1.8	TO-220	50 Units/ Tube
GM6603-2.5TA3T	2.5	TO-263-2	50 Units/ Tube
GM6603-2.5TA3R	2.5	TO-263-2	800 Units/ Tape&Reel
GM6603-2.5TB3T	2.5	TO-220	50 Units/ Tube
GM6603-2.85TA3T	2.85	TO-263-2	50 Units/ Tube
GM6603-2.85TA3R	2.85	TO-263-2	800 Units/ Tape&Reel
GM6603-2.85TB3T	2.85	TO-220	50 Units/ Tube
GM6603-3.0TA3T	3.0	TO-263-2	50 Units/ Tube
GM6603-3.0TA3R	3.0	TO-263-2	800 Units/ Tape&Reel
GM6603-3.0TC3T	3.0	TO-252	80 Units/ Tube
GM6603-3.0TC3R	3.0	TO-252	2,500 Units/ Tape & Reel
GM6603-3.0TB3T	3.0	TO-220	50 Units/ Tube

* For detail Ordering Number identification, please see last page.

◆ ORDERING INFORMATION (Continued)

Ordering Number	Output Voltage	Package	Shipping
GM6603-3.3TA3T	3.3	TO-263-2	50 Units/Tube
GM6603-3.3TA3R	3.3	TO-263-2	800 Units/Tape&Reel
GM6603-3.3TC3T	3.3	TO-252	80 Units/Tube
GM6603-3.3TC3R	3.3	TO-252	2,500 Units/ Tape & Reel
GM6603-3.3TB3T	3.3	TO-220	50 Units/Tube
GM6603-5.0TA3T	5.0	TO-263-2	50 Units/Tube
GM6603-5.0TA3R	5.0	TO-263-2	800 Units/Tape&Reel
GM6603-5.0TC3T	5.0	TO-252	80 Units/Tube
GM6603-5.0TC3R	5.0	TO-252	2,500 Units/ Tape & Reel
GM6603-5.0TB3T	5.0	TO-220	50 Units/Tube

* For detail Ordering Number identification, please see last page.

◆ ABSOLUTE MAXIMUM RATINGS

PARAMETER	SYMBOL	VALUE	UNIT
Power Dissipation	P_D	Internally limited	W
Input Voltage	V_{IN}	15	V
Operating Junction Temperature Range Control Section Power Transistor	T_J	 0 to 125 0 to 150	°C
Lead Temperature(Soldering, 10sec)	T_{LEAD}	300	°C
Storage Temperature Range	T_{STG}	-65 to + 150	°C

BLOCK DIAGRAM

(Adjustable Version)

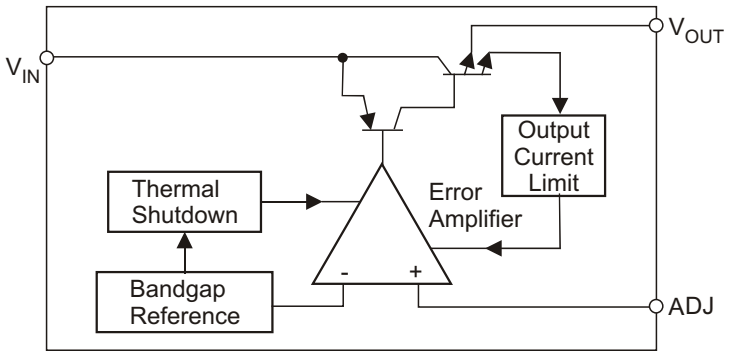

(Fixed Version)

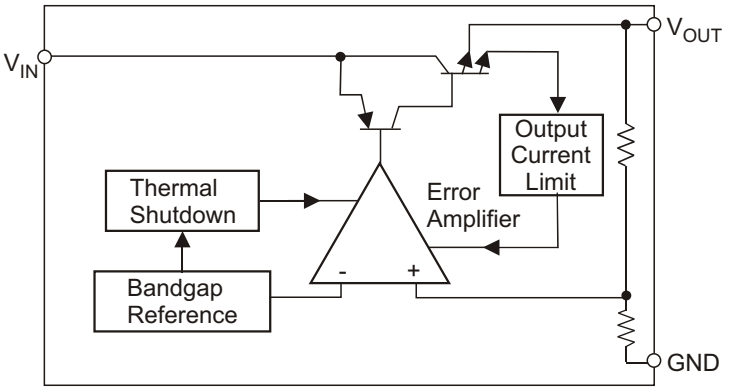

◆ ELECTRICAL CHARACTERISTICS

(Typicals and limits appearing in normal type apply for T_J = 25°C)

Parameter		Symbol	Condition	Min	Typ	Max	Unit
Reference Voltage	GM6603-Adj	V_{REF}	I_{OUT}=10mA, V_{IN}-V_{OUT}=1.5V 10mA ≤ I_{OUT} ≤ 3A, 3.3V ≤ V_{IN} ≤ 7V	1.238 1.230	1.250 1.250	1.262 1.270	V
Output Voltage	GM6603-1.8	V_O	I_{OUT}=10mA, V_{IN}=3.3V 10mA ≤ I_{OUT} ≤ 3A, 3.3V ≤ V_{IN} ≤ 7V	1.782 1.764	1.800 1.800	1.818 1.836	V
	GM6603-2.5		I_{OUT}=10mA, V_{IN}=4V 10mA ≤ I_{OUT} ≤ 3A, 4V ≤ V_{IN} ≤ 7V	2.475 2.450	2.500 2.500	2.525 2.550	V
	GM6603-3.3		I_{OUT}=10mA, V_{IN}=4.8V 10mA ≤ I_{OUT} ≤ 3A, 4.8V ≤ V_{IN} ≤ 7V	3.267 3.234	3.300 3.300	3.333 3.366	V
	GM6603-5.0		I_{OUT}=10mA, V_{IN}=6.5V 10mA ≤ I_{OUT} ≤ 3A, 6.5V ≤ V_{IN} ≤ 7V	4.950 4.900	5.000 5.000	5.050 5.100	V
Line Regulation	GM6603-Adj	REG_{LINE}	I_{OUT}=10mA,		0.04	0.20	%
	GM6603-1.8		I_{OUT}=10mA, 3.3V ≤ V_{IN} ≤ 7V		0.04	0.20	
	GM6603-2.5		I_{OUT}=10mA, 4V ≤ V_{IN} ≤ 7V		0.04	0.20	
	GM6603-3.3		I_{OUT}=10mA, 4.8V ≤ V_{IN} ≤ 7V		0.04	0.20	
	GM6603-5.0		I_{OUT}=10mA, 6.5V ≤ V_{IN} ≤ 7V		0.04	0.20	
Load Regulation	GM6603-Adj	REG_{LOAD}	V_{IN}-V_{OUT}=1.5V, 10mA ≤ I_O ≤ 3A		0.2	0.40	%
	GM6603-1.8		V_{IN}=3.8V, 10mA ≤ I_O ≤ 3A		0.2	0.40	
	GM6603-2.5		V_{IN}=4.5V, 10mA ≤ I_O ≤ 3A		0.2	0.40	
	GM6603-3.3		V_{IN}=5.3V, 10mA ≤ I_O ≤ 3A		0.2	0.40	
	GM6603-5.0		V_{IN}=7V, 10mA ≤ I_O ≤ 3A		0.2	0.40	
Dropout Voltage		V_D	I_{OUT}=3A		1.15	1.3	V
Current Limit		I_{CL}	V_{IN}-V_{OUT}=3V	3	4		A
Minimum Load Current	GM6603-Adj	$I_{O\ MIN}$	V_{IN}=5V		1.7	5	mA
Quiescent Current	GM6603-1.8	I_Q	V_{IN}=3.3V, 10mA ≤ I_O ≤ 3A		5	10	mA
	GM6603-2.5		V_{IN}=4.0V, 10mA ≤ I_O ≤ 3A		5	10	
	GM6603-3.3		V_{IN}=4.8V, 10mA ≤ I_O ≤ 3A		5	10	
	GM6603-5.0		V_{IN}=6.5V, 10mA ≤ I_O ≤ 3A		5	10	
Adjust Pin Current	GM6603-Adj	I_{ADJ}	I_{OUT}=10mA, 2.65V ≤ V_{IN} ≤ 7V		55	90	μA
Temperature Coefficient		T_C	V_{IN}-V_{OUT}=1.5V, I_{OUT}=10mA		0.005		%/°C
Ripple Rejection		R_A	V_{IN}-V_{OUT}=1.5V, I_{OUT}=3A	60	72		dB

◆ APPLICATION INFORMATION

GM6603 series linear regulators provide fixed and adjustable output voltages at currents up to 3.0A. These regulators are protected against over current conditions and include thermal shutdown protection. GM6603 has a composite PNP-PN output transistor and require an output capacitor for stability.

A detailed procedure for selecting this capacitor is as followed.

Stability Considerations

The output compensation capacitor helps to determine three main characteristics of a linear regulator's performance: start-up delay, load transient response, and loop stability. The capacitor value and type is based on cost, availability, size, and temperature constraints. A tantalum or aluminum electrolytic capacitor is preferred, as a film or ceramic capacitor with almost zero ESR can cause instability. An aluminum electrolytic capacitor is the least expensive type. But when the circuit operates at low temperatures, both the value and ESR of the capacitor will vary widely. For optimum performance over the full operating temperature range, a tantalum capacitor is the best. A 22μF tantalum capacitor will work fine in most applications. But with high current regulators, such as GM6603 higher capacitance values will improve the transient response and stability. Most applications for the GM6603's involve large changes in load current, so the output capacitor must supply instantaneous load current. The ESR of the output capacitor causes an immediate drop in output voltage given by:

$$V = I \times ESD$$

In microprocessor applications an output capacitor network of several tantalum and ceramic capacitors in parallel is commonly used. This reduces overall ESR and minimizes the instantaneous output voltage drop under transient load conditions. The output capacitor network should be placed as close to the load as possible for the best results.

Protection Diodes

When large external capacitors are used with most linear regulator, it is wise to add protection diodes. If the input voltage of the regulator is shorted, the output capacitor will discharge into the output of the regulator. The discharge current depends on the value of capacitor, output voltage, and rate at which V_{IN} drops.

FIGURE 1 [(a),(b)]. Protection Diode Scheme for Large Output Capacitors

(a) Fixed Version

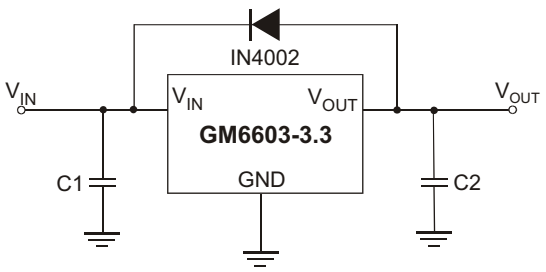

(b) Adjustable Version

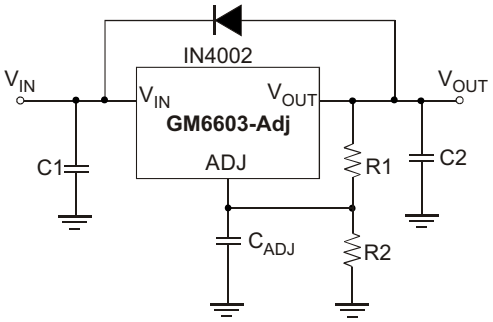

In GM6603 linear regulators, the discharge path is through a large junction, and protection diodes are normally not needed. However, if the regulator is used with large output capacitance values and the input voltage is instantaneously shorted to ground, damage can occur. In this case, a diode connected as shown above in Figure 1.

Output Voltage Sensing

GM6603 series is three terminal regulator, so they cannot provide true remote load sensing. Load regulation is limited by the resistance of the conductors connecting the regulator to the load. For best results, GM6603 should be connected as shown in Figure 2.

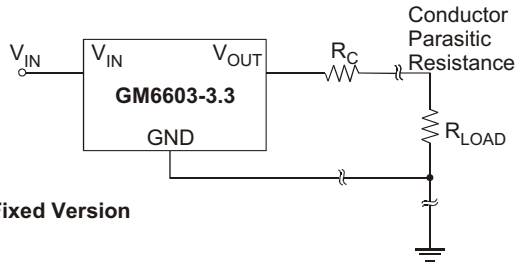

(a) Fixed Version

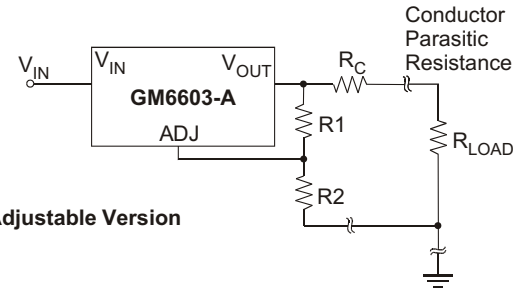

(b) Adjustable Version

FIGURE 2 [(a),(b)] Conductor Parasitic Resistance Effects are Minimized by this Grounding Scheme For Fixed and Adjustable Output Regulators

Calculating Power Dissipation and Heat Sink Requirements

GM6603 series precision linear regulators include thermal shutdown and current limit circuitry to protect the devices. However, high power regulators normally operate at high junction temperatures so it is important to calculate the power dissipation and junction temperatures accurately to be sure that you use and adequate heat sink. The case is connected to V_{OUT} on GM6603 so electrical isolation may be required for some applications. Thermal compound should always be used with high current regulators like the GM6603.

The thermal characteristics of an IC depend on four factors:

1. Maximum Ambient Temperature T_A (°C)
2. Power Dissipation P_D (Watts)
3. Maximum Junction Temperature T_J (°C)
4. Thermal Resistance Junction to ambient R_{JA} (°C/W)

These relationship of these four factors is expressed by equation (1):

$$T_J = T_A + P_D \times R_{JA}$$

Maximum ambient temperature and power dissipation are determined by the design while the maximum junction temperature and thermal resistance depend on the manufacturer and the package type.

The maximum power dissipation for a regulator is expressed by equation (2):

$$P_{D(max)}=\{V_{IN(max)}-V_{OUT(min)}\} I_{OUT(max)} + V_{IN(max)}I_Q$$

where:
$V_{IN(max)}$ is the maximum input voltage,
$V_{OUT(min)}$ is the minimum output voltage,
$I_{OUT(max)}$ is the maximum output current
I_Q is the maximum quiescent current at $I_{OUT(max)}$.

A heat sink effectively increases the surface area of the package to improve the flow of heat away from the IC into the air. Each material in the heat flow path between the IC and the environment has a thermal resistance. Like series electrical resistances, these resistances are summed to determine R_{JA}, the total thermal resistance between the junction and the air. This is expressed by equation (3):

$$R_{JA} = R_{JC} + R_{CS} + R_{SA}$$

Where all of the following are in °C/W:
R_{JC} is thermal resistance of junction to case,
R_{CS} is thermal resistance of case to heat sink,
R_{SA} is thermal resistance of heat sink to ambient air

The value for R_{JA} is calculated using equation (3) and the result can be substituted in equation (1). The value for R_{JC} is 3.5°C/W for a given package type based on an average die size. For a high current regulator such as GM6603, the majority of the heat is generated in the power transistor section.

◆ Typical Performance Characteristics

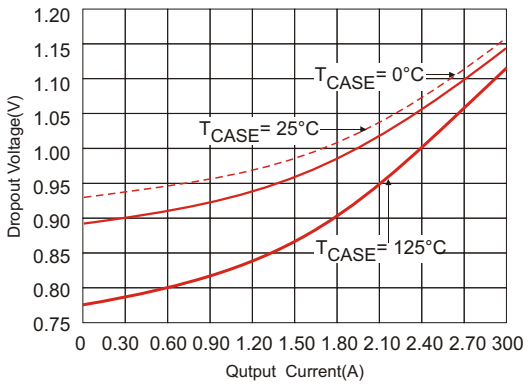

Figure 3. Dropout Voltage vs. Output Current

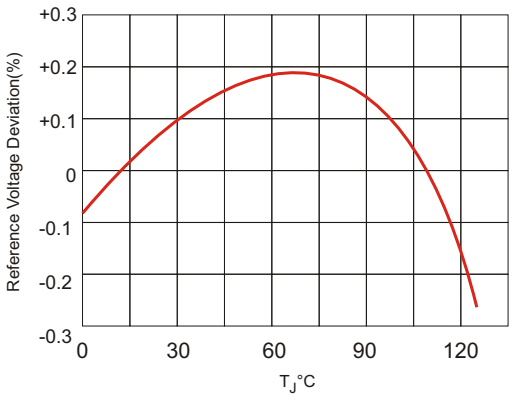

Figure 4. Bandgap Reference Voltage Deviation vs. Temperature

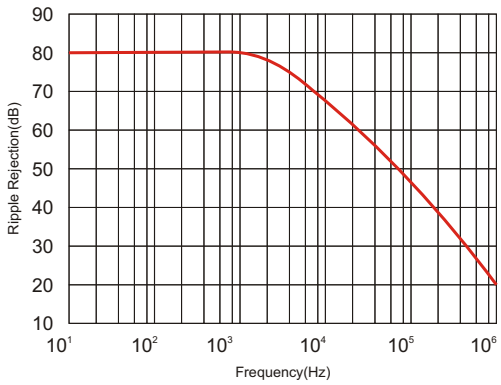

Figure 5. Ripple Rejection vs. Frequency

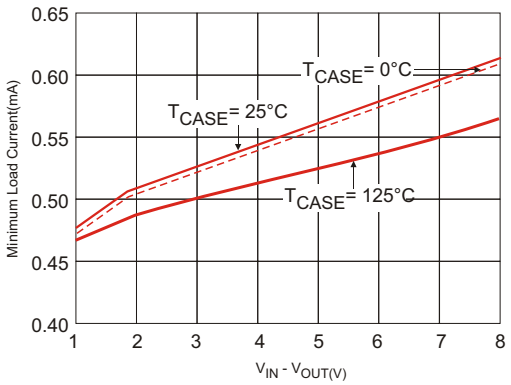

Figure 6. Minimum Load Current vs. V_{IN} - $V_{OUT(V)}$

◆ TO-220 PACKAGE OUTLINE DIMENSIONS

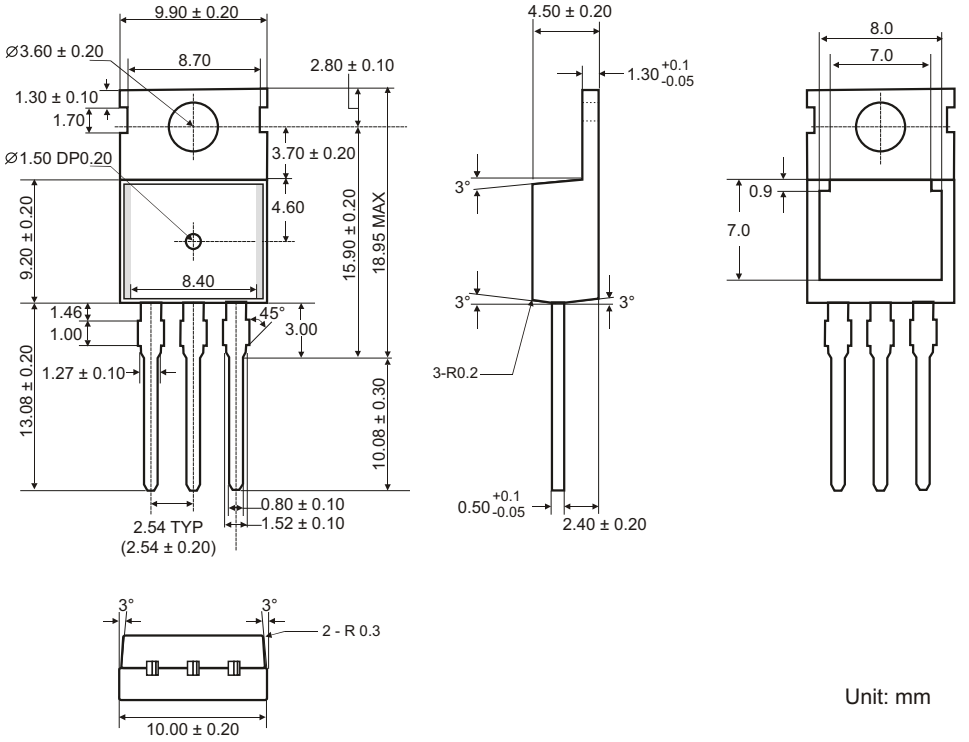

◆ TO-263-2 PACKAGE OUTLINE DIMENSIONS

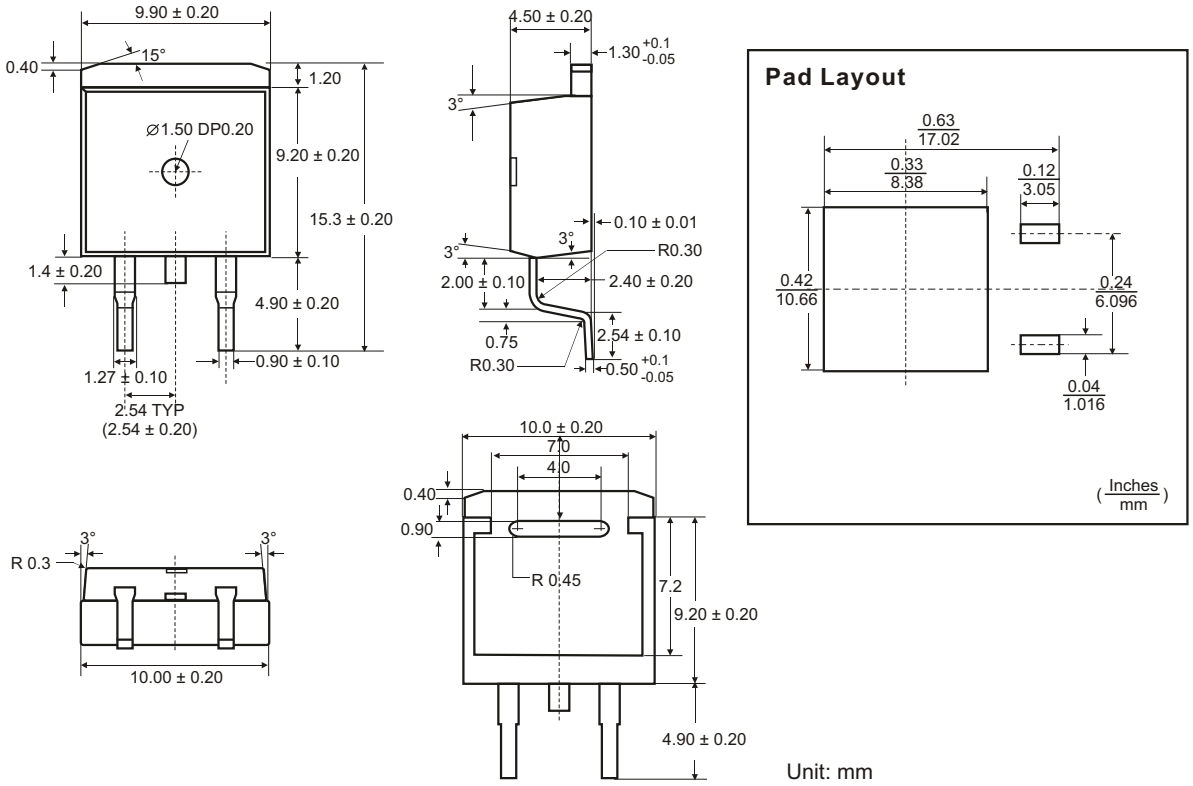

◆ TO-252 PACKAGE OUTLINE DIMENSIONS

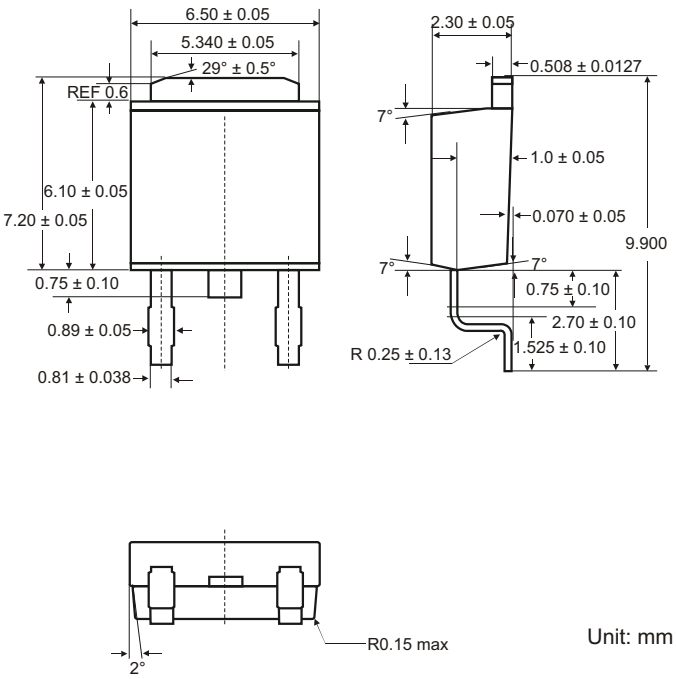

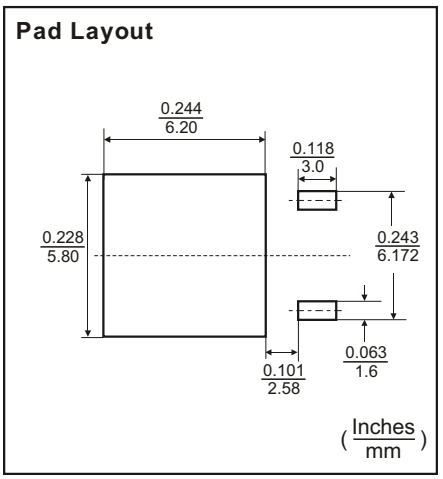

◆ ORDERING NUMBER

GM 6603 1.8 TB3 T

Gamma Micro.

Circuit Type

Output Voltage
A: Adj, 1.5: 1.5V
1.8: 1.8V, 2.5: 2.5V
2.85: 2.85V, 3.0: 3.0V
3.3: 3.3V, 5.0: 5.0V

Package
TA3: TO-263-2
TB3: TO-220
TC3: TO-252

Shipping
T: Tube
R: Tape & Reel

GAMMA Micro, GAMMA, and are registered trademarks of GAMMA MICROELECTRONICS INC. GAMMA reserves the right to make changes without further notice to any products herein. Information provided herein is alleged to be exact and consistent and this publication surpasses and replaces all information previously supplied.

GAMMA makes no warranty the suitability of its products for any particular purpose, nor does GAMMA assume any liability arising out of the application or use of any product or circuit, and specifically disclaims any and all liability including without limitation special, consequential or incidental damages.

GAMMA products are not authorized for using as critical components in life support devices or systems without prior written approval from GAMMA MICROELECTRONICS INC.

О компании

ООО "ТрейдЭлектроникс" - это оперативные поставки широкого спектра электронных компонентов отечественного и импортного производства напрямую от производителей и с крупнейших мировых складов. Реализуемая нашей компанией продукция насчитывает более полумиллиона наименований.

Благодаря этому наша компания предлагает к поставке практически не ограниченный ассортимент компонентов как оптовыми, мелкооптовыми партиями, так и в розницу.

Наличие собственной эффективной системы логистики обеспечивает надежную поставку продукции по конкурентным ценам в точно указанные сроки.

Срок поставки со стоков в **Европе и Америке – от 3 до 14 дней.**

Срок поставки из **Азии – от 10 дней.**

Благодаря развитой сети поставщиков, помогаем в поиске и приобретении экзотичных или снятых с производства компонентов.

Предоставляем спец цены на элементы для создания инженерных сэмплов.

Упорный труд, качественный результат дают нам право быть уверенными в себе и надежными для наших клиентов.

Наша компания это:

- Гарантия качества поставляемой продукции
- Широкий ассортимент
- Минимальные сроки поставок
- Техническая поддержка
- Подбор комплектации
- Индивидуальный подход
- Гибкое ценообразование

Наша организация особенно сильна в поставках модулей, микросхем, пассивных компонентов, ксайленсах (XC), EPF, EPM и силовой электроники.

Большой выбор предлагаемой продукции, различные виды оплаты и доставки, позволят Вам сэкономить время и получить максимум выгоды от сотрудничества с нами!

Trade Electronics.ru

гарантия бесперебойности производства и качества выпускаемой продукции

Перечень производителей, продукцию которых мы поставляем на российский рынок

AMD
ANALOG DEVICES
BOURNS
Coilcraft
élantec Semiconductor, Inc.
HARRIS
Infineon
JRC
MICREL
MOTOROLA
nichicon
PHILIPS
ROHM
SGS-THOMSON
Sipex
TAIYO YUDEN
TOKO
ZILOG
Winbond
Allegro
ATMEL
BURR - BROWN
EXAR
HITACHI
intel
Lattice
muRata
OKI
QUALCOMM
SAMSUNG
SHARP
SONY
TDK
TOSHIBA
KYOCERA
ALTERA
AVX
CITILYST
CYPRESS
FAIRCHILD SEMICONDUCTOR
HOLTEK
International IOR Rectifier
LINEAR TECHNOLOGY
MITSUBISHI
National Semiconductor
ON Semiconductor
REALTEK
SANYO
SHINDENGEN
SGS
TECCOR
TUNDRA
XILINX
Amphenol
Bay Linear
CIRRUS LOGIC
DALLAS
FUJITSU
IDT
intersil
MAXIM
molex
NEC
Panasonic
RENESAS
SII
SIEMENS
ST
Texas Instruments
VISHAY
ZETEX SEMICONDUCTORS

Trade Electronics.ru

гарантия бесперебойности производства и качества выпускаемой продукции

С удовольствием будем прорабатывать для Вас поставки всех необходимых компонентов по текущим запросам для скорейшего выявления групп элементов, по которым сотрудничество именно с нашей компанией будет для Вас максимально выгодным!

С уважением,

Менеджер отдела продаж ООО

«Трейд Электроникс»

Шишлаков Евгений

8 (495)668-30-28 доб 169

manager28@tradeelectronics.ru

http://www.tradeelectronics.ru/