FAIRCHILD SEMICONDUCTOR®

January 2007

FIN24AC

µSerDes™

22-Bit Bi-Directional Serializer/Deserializer

Features

- Low power for minimum impact on battery life
  - Multiple power-down modes
  - AC coupling with DC balance
- 100nA in standby mode, 5mA typical operating conditions
- Cable reduction: 25:4 or greater
- Bi-directional operation 50:7 reduction or greater
- Differential signaling:
  - -90dBm EMI when using CTL in lab conditions using a near field probe
  - Minimized shielding
  - Minimized EMI filter
  - Minimum susceptibility to external interference
- Up to 22 bits in either direction
- Up to 20MHz parallel interface operation
- Voltage translation from 1.65V to 3.6V
- Ultra-small and cost-effective packaging
- High ESD protection: >8kV HBM
- Parallel I/O power supply (V_{DDP}) range between 1.65V to 3.6V

Applications

- Micro-controller or pixel interfaces
- Image sensors
- Small displays
  - LCD, cell phone, digital camera, portable gaming, printer, PDA, video camera, automotive

General Description

The FIN24AC µSerDes™ is a low-power Serializer/Deserializer (SerDes) that can help minimize the cost and power of transferring wide signal paths. Through the use of serialization, the number of signals transferred from one point to another can be significantly reduced. Typical reduction is 4:1 to 6:1 for unidirectional paths. For bi-directional operation, using half duplex for multiple sources, it is possible to increase the signal reduction to close to 10:1. Through the use of differential signaling, shielding and EMI filters can also be minimized, further reducing the cost of serialization. The differential signaling is also important for providing a noise-insensitive signal that can withstand radio and electrical noise sources. Major reduction in power consumption allows minimal impact on battery life in ultra-portable applications. A unique word boundary technique assures that the actual word boundary is identified when the data is deserialized. This guarantees that each word is correctly aligned at the deserializer on a word-by-word basis through a unique sequence of clock and data that is not repeated except at the word boundary. A single PLL is adequate for most applications, including bi-directional operation.

Ordering Information

Order Number	Package Number	Pb-Free	Package Description
FIN24ACGFX	BGA042	Yes	42-Ball Ultra Small Scale Ball Grid Array (USS-BGA), JEDEC MO-195, 3.5mm Wide
FIN24ACMLX	MLP040	Yes	40-Terminal Molded Leadless Package (MLP), Quad, JEDEC MO-220, 6mm Square

Pb-Free package per JEDEC J-STD-020B. BGA and MLP packages available in tape and reel only.

µSerDes™ is a trademark of Fairchild Semiconductor Corporation.

© 2005 Fairchild Semiconductor Corporation

Functional Block Diagram

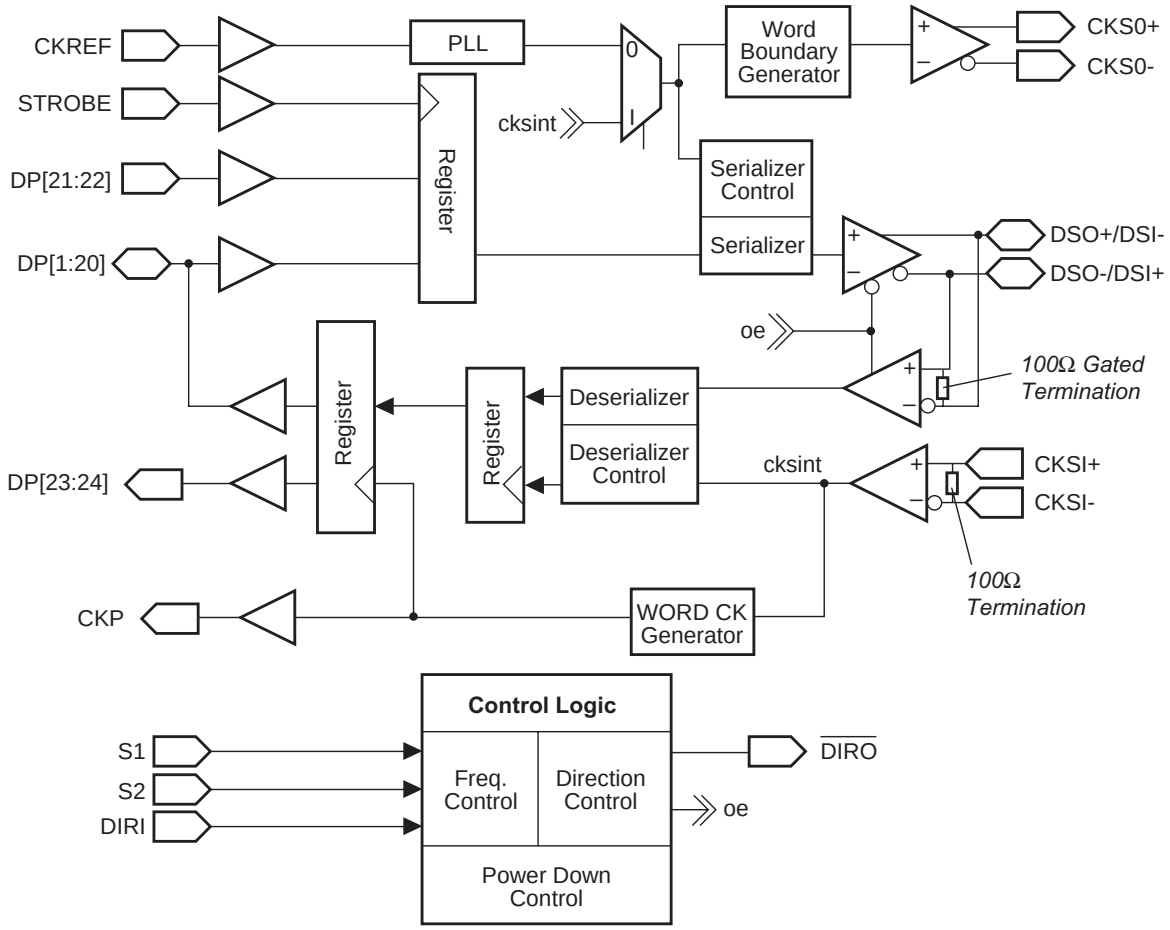

Figure 1. Block Diagram

Terminal Description

Terminal Name	I/O Type	Number of Terminals	Description of Signals
DP[1:20]	I/O	20	LVCMOS Parallel I/O, direction controlled by DIRI pin
DP[21:22]	I	2	LVCMOS Parallel Unidirectional Inputs
DP[23:24]	O	2	LVCMOS Unidirectional Parallel Outputs
CKREF	IN	1	LVCMOS Clock Input and PLL Reference
STROBE	IN	1	LVCMOS Strobe Signal for Latching Data into the Serializer
CKP	OUT	1	LVCMOS Word Clock Output
DSO+ / DSI– DSO– / DSI+	DIFF-I/O	2	CTL Differential Serial I/O Data Signals(1) DSO: Refers to output signal pair DSI: Refers to input signal pair DSO(I)+: Positive signal of DSO(I) pair DSO(I)–: Negative signal of DSO(I) pair
CKSI+, CKSI–	DIFF-IN	2	CTL Differential Deserializer Input Bit Clock CKSI: Refers to signal pair CKSI+: Positive signal of CKSI pair CKSI–: Negative signal of CKSI pair
CKSO+, CKSO–	DIFF-OUT	2	CTL Differential Serializer Output Bit Clock CKSO: Refers to signal pair CKSO+: Positive signal of CKSO pair CKSO–: Negative signal of CKSO pair
S1	IN	1	LVCMOS Mode Selection terminals used to select Frequency Range for the RefClock, CKREF
S2	IN	1	
DIRI	IN	1	LVCMOS Control Input Used to control direction of Data Flow: DIRI = “1” Serializer, DIRI = “0” Deserializer
$\overline{\text{DIRO}}$	OUT	1	LVCMOS Control Output Inversion of DIRI
V_{DDP}	Supply	1	Power Supply for Parallel I/O and Translation Circuitry
V_{DDS}	Supply	1	Power Supply for Core and Serial I/O
V_{DDA}	Supply	1	Power Supply for Analog PLL Circuitry
GND	Supply	0	Use Bottom Ground Plane for Ground Signals

Note:

1. The DSO/DSI serial port terminals have been arranged such that when one device is rotated 180° to the other device, the serial connections properly align without the need for any traces or cable signals to cross. Other layout orientations may require that traces or cables cross.

Connection Diagrams

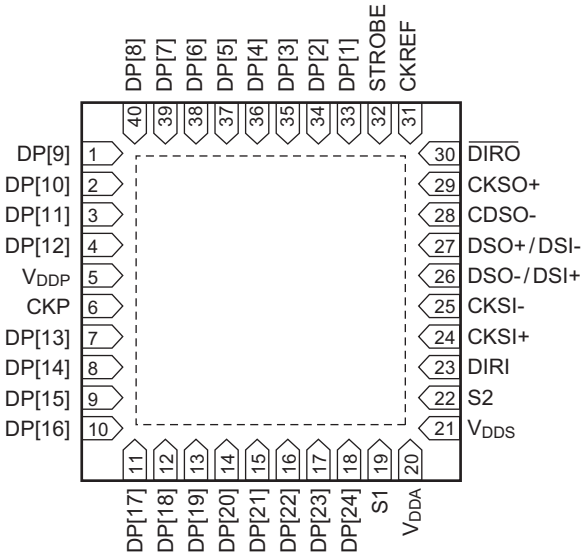

Figure 2. Terminal Assignments for MLP (Top View)

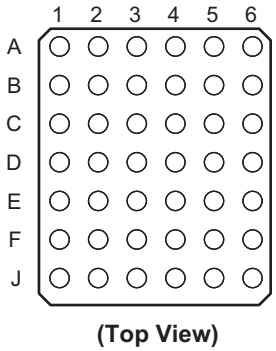

Pin Assignments

	1	2	3	4	5	6
A	DP[9]	DP[7]	DP[5]	DP[3]	DP[1]	CKREF
B	DP[11]	DP[10]	DP[6]	DP[2]	STROBE	$\overline{\text{DIRO}}$
C	CKP	DP[12]	DP[8]	DP[4]	CKSO+	CKSO-
D	DP[13]	DP[14]	V_{DDP}	GND	DSO- / DSI+	DSO+ / DSI-
E	DP[15]	DP[16]	GND	V_{DDS}	CKSI+	CKSI-
F	DP[17]	DP[18]	DP[21]	V_{DDA}	S2	DIRI
J	DP[19]	DP[20]	DP[22]	DP[23]	DP[24]	S1

Figure 3. Terminal Assignments for µBGA

Control Logic Circuitry

The FIN24AC has the ability to be used as a 24-bit Serializer or a 24-bit Deserializer. Pins S1 and S2 must be set to accommodate the clock reference input frequency range of the serializer. Table 1 shows the pin programming of these options based on the S1 and S2 control pins. The DIRI pin controls whether the device is a serializer or a deserializer. When DIRI is asserted LOW, the device is configured as a deserializer. When the DIRI pin is asserted HIGH, the device is configured as a serializer. Changing the state on the DIRI signal reverses the direction of the I/O signals and generates the opposite state signal on $\overline{\text{DIRO}}$. For unidirectional operation, the DIRI pin should be hardwired to the HIGH or LOW state and the $\overline{\text{DIRO}}$ pin should be left floating. For bi-directional operation, the DIRI of the master device is driven by the system and the $\overline{\text{DIRO}}$ signal of the master is used to drive the DIRI of the slave device.

Serializer/Deserializer with Dedicated I/O Variation

The serialization and deserialization circuitry is setup for 24 bits. Because of the dedicated inputs and outputs, only 22 bits of data are ever serialized or deserialized. Regardless of the mode of operation, the serializer is always sending 24 bits of data and two boundary bits and the deserializer is always receiving 24 bits of data and two word boundary bits. Bits 23 and 24 of the serializer always contain the value of zero and are discarded by the deserializer. DP[21:22] input to the serializer is deserialized to DP[23:24] respectively.

Turn-Around Functionality

The device passes and inverts the $\overline{\text{DIRI}}$ signal through the device asynchronously to the $\overline{\text{DIRO}}$ signal. Care must be taken during design to ensure that no contention occurs between the deserializer outputs and the other devices on this port. Optimally the peripheral device driving the serializer should be in a HIGH-impedance state prior to the DIRI signal being asserted.

When a device with dedicated data outputs turns from a deserializer to a serializer, the dedicated outputs remain at the last logical value asserted. This value only changes if the device is once again turned around into a deserializer and the values are overwritten.

Power-Down Mode: (Mode 0)

Mode 0 is used for powering down and resetting the device. When both of the mode signals are driven to a LOW state, the PLL and references are disabled, differential input buffers are shut off, differential output buffers are placed into a HIGH-impedance state, LVCMOS outputs are placed into a HIGH-impedance state, LVCMOS inputs are driven to a valid level internally, and all internal circuitry is reset. The loss of CKREF state is also enabled to ensure that the PLL only powers up if there is a valid CKREF signal.

In a typical application, signals do not change states other than between the desired frequency range and the power-down mode. This allows for system-level power-down functionality to be implemented via a single wire for a SerDes pair. The S1 and S2 selection signals that have their operating mode driven to a “logic 0” should be hardwired to GND. The S1 and S2 signals that have their operating mode driven to a “logic 1” should be connected to a system level power-down signal.

Table 1. Control Logic Circuitry

Mode Number	S2	S1	DIRI	Description
0	0	0	x	Power-Down Mode
1	0	1	1	24-Bit Serializer, 2MHz to 5MHz CKREF
	0	1	0	24-Bit Deserializer
2	1	0	1	24-Bit Serializer, 5MHz to 15MHz CKREF
	1	0	0	24-Bit Deserializer
3	1	1	1	24-Bit Serializer, 10MHz to 20MHz CKREF
	1	1	0	24-Bit Deserializer

Serializer Operation Mode

The serializer configurations are described in the following sections. The basic serialization circuitry works essentially the same in these modes, but the actual data and clock streams differ depending on if CKREF is the same as the STROBE signal or not. When the CKREF equals STROBE, the CKREF and STROBE signals have an identical frequency of operation, but may or may not be phase aligned. When CKREF does not equal STROBE, each signal is distinct and CKREF must be running at a frequency high enough to avoid any loss of data condition. CKREF must never be a lower frequency than STROBE.

Serializer Operation: (Figure 4)
MODE 1, 2, or 3
DIRI = 1,
CKREF = STROBE

The Phase-Locked Loop (PLL) must receive a stable CKREF signal to achieve lock prior to any valid data being sent. The CKREF signal can be used as the data STROBE signal, provided that data can be ignored during the PLL lock phase.

Once the PLL is stable and locked, the device can begin to capture and serialize data. Data is captured on the rising edge of the STROBE signal and serialized. The serialized data stream is synchronized and sent source synchronously with a bit clock with an embedded word boundary. When in this mode, the internal deserializer circuitry is disabled; including the serial clock, serial data input buffers, the bi-directional parallel outputs, and the CKP word clock. The CKP word clock is driven HIGH.

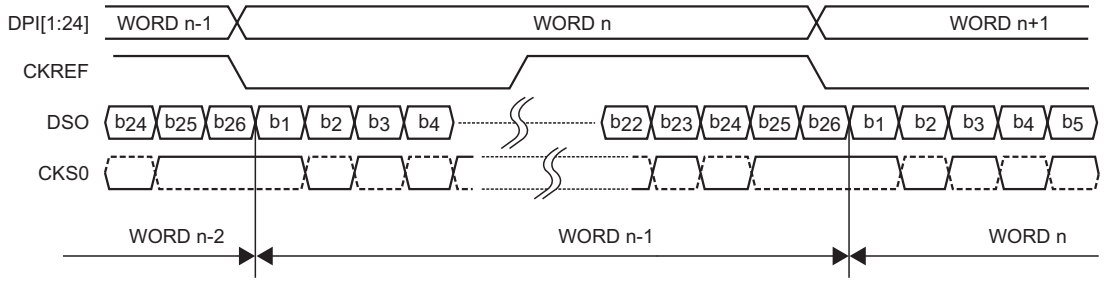

Figure 4. Serializer Timing Diagram (CKREF equals STROBE)

Serializer Operation: (Figure 5),
DIRI = 1,
CKREF does not = STROBE

If the same signal is not used for CKREF and STROBE, the CKREF signal must be run at a higher frequency than the STROBE rate to serialize the data correctly. The actual serial transfer rate remains at 26 times the CKREF frequency. A data bit value of zero is sent when no valid data is present in the serial bit stream. The operation of the serializer otherwise remains the same.

The exact frequency that the reference clock needs is dependent upon the stability of the CKREF and STROBE signal. If the source of the CKREF signal implements spread spectrum technology, the maximum frequency of this spread spectrum clock should be used in calculating the ratio of STROBE frequency to the CKREF frequency. Similarly if the STROBE signal has significant cycle-to-cycle variation, the maximum cycle-to-cycle time needs to be factored into the selection of the CKREF frequency.

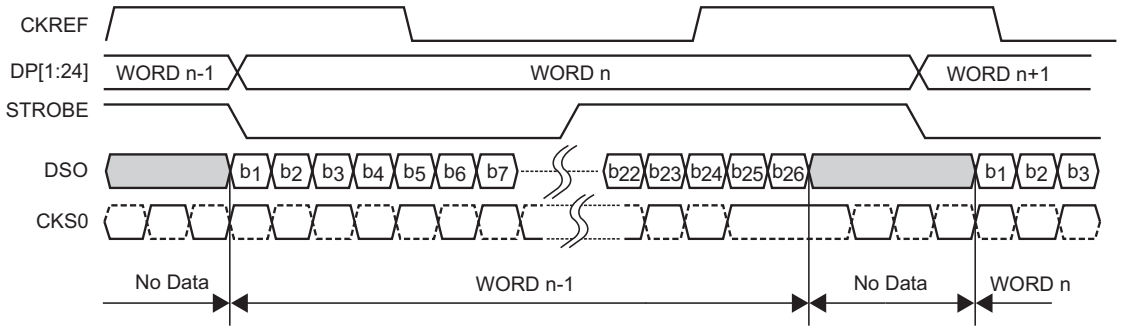

Figure 5. Serializer Timing Diagram (CKREF does not equal STROBE)

Serializer Operation Mode (Continued)

Serializer Operation: (Figure 6), DIRI = 1, No CKREF

A third method of serialization can be accomplished with a free running bit clock on the CKSI signal. This mode is enabled by grounding the CKREF signal and driving the DIRI signal HIGH.

At power-up, the device is configured to accept a serialization clock from CKSI. If a CKREF is received, this device enables the CKREF serialization mode. The device remains in this mode even if CKREF is stopped. To re-enable this mode, the device must be powered down and powered back up with a “logic 0” on CKREF.

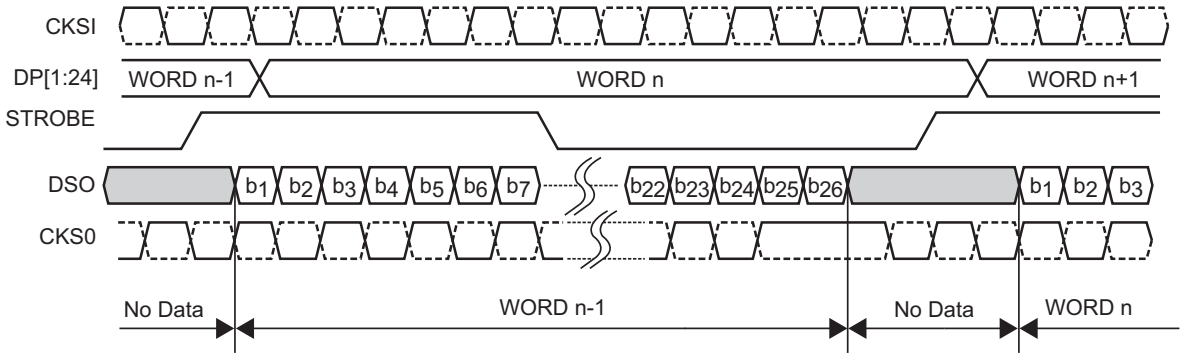

Figure 6. Serializer Timing Diagram Using Provided Bit Clock (No CKREF)

Deserializer Operation Mode

The operation of the deserializer is only dependent upon the data received on the DSI data signal pair and the CKSI clock signal pair. The following two sections describe the operation of the deserializer under two distinct serializer source conditions. References to the CKREF and STROBE signals refer to the signals associated with the serializer device used in generating the serial data and clock signals that are inputs to the deserializer.

When operating in this mode, the internal serializer circuitry is disabled; including the parallel data input buffers. If there is a CKREF signal provided, the CKSO serial clock continues to transmit bit clocks. Upon device power-up (S1 or S2 = 1), all deserializer output data pins are driven LOW until valid data is passed through the deserializer.

Deserializer Operation: DIRI = 0 (Serializer Source: CKREF = STROBE)

When the DIRI signal is asserted LOW, the device is configured as a deserializer. Data is captured on the serial port and deserialized through use of the bit clock sent with the data. The word boundary is defined in the actual clock and data signal. Parallel data is generated at the time the word boundary is detected. The falling edge of CKP occurs approximately six bit times after the falling edge of CKSI. The rising edge of CKP goes high approximately 13 bit times after CKP goes LOW. The rising edge of CKP is generated approximately 13 bit times later. When no embedded word boundary occurs, no pulse is generated on CKP and CKP remains HIGH.

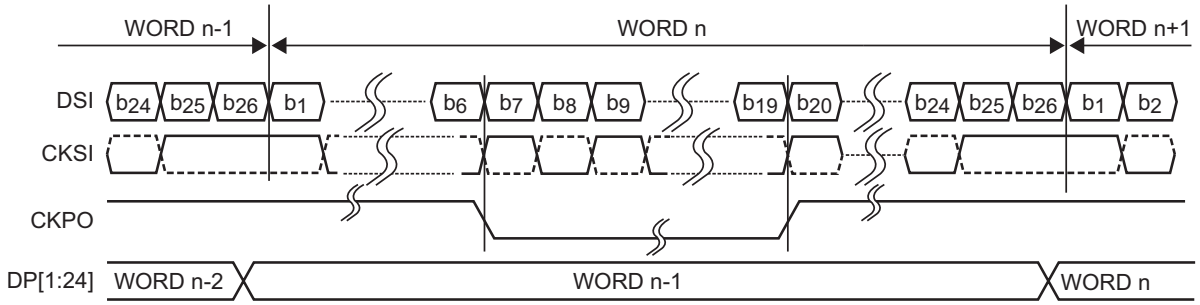

Figure 7. Deserializer Timing Diagram (Serializer Source: CKREF equals STROBE)

Deserializer Operation: DIRI = 0 (Serializer Source: CKREF does not = STROBE)

The logical operation of the deserializer remains the same if the CKREF is equal in frequency to the STROBE or at a higher frequency than the STROBE. The actual serial data stream presented to the deserializer, however, differs because it has non-valid data bits sent between words. The duty cycle of CKP varies based on the ratio of the frequency of the CKREF signal to the STROBE signal. The frequency of the CKP signal is equal to the STROBE frequency. The falling edge of CKP will occurs six bit times after the data transition. The LOW time of the CKP signal is equal to half (13 bit times) of the CKREF period. The CKP HIGH time is equal to STROBE period – half of the CKREF period. Figure 8 is representative of a waveform that could be seen when CKREF is not equal to STROBE. If CKREF is significantly faster, additional non-valid data bits occur between data words.

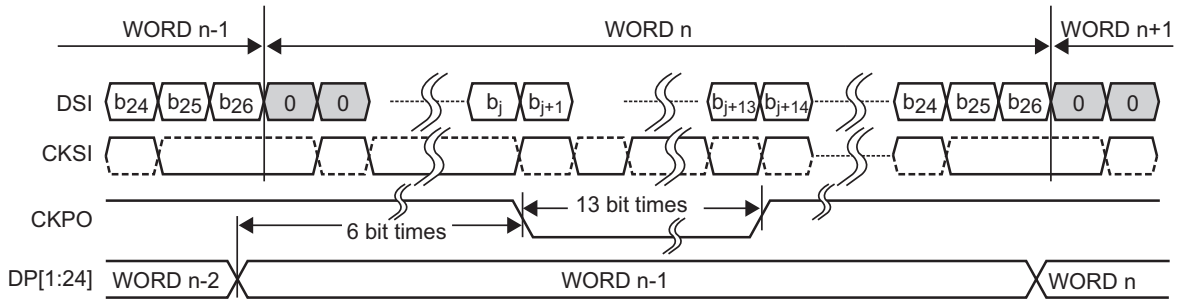

Figure 8. Deserializer Timing Diagram (Serializer Source: CKREF does not equal STROBE)

Embedded Word Clock Operation

The FIN24AC sends and receives serial data source synchronously with a bit clock. The bit clock has been modified to create a word boundary at the end of each data word. The word boundary has been implemented by skipping a low clock pulse. This appears in the serial clock stream as 3 consecutive bit times where signal CKSO remains HIGH.

To implement this sort of scheme, two extra data bits are required. During the word boundary phase, the data toggles either HIGH-then-LOW or LOW-then-HIGH dependent upon the last bit of the actual data word. Table 2 provides some examples of the actual data word and the data word with the word boundary bits added. Note that a 24-bit word is extended to 26-bits during serial transmission. Bit 25 and Bit 26 are defined with-respect-to Bit 24. Bit 25 is always the inverse of Bit 24, and Bit 26 is always the same as Bit 24. This ensures that a "0" → "1" and a "1" → "0" transition always occurs during the embedded word phase where CKSO is HIGH.

The serializer generates the word boundary data bits and the boundary clock condition and embeds them into the serial data stream. The deserializer looks for the end of the word boundary condition to capture and transfer the data to the parallel port. The deserializer only uses the embedded word boundary information to find and capture the data. These boundary bits are stripped prior to the word being sent out the parallel port.

LVCMOS Data I/O

The LVCMOS input buffers have a nominal threshold value equal to half V_{DDP}. The input buffers are only operational when the device is operating as a serializer. When the device is operating as a deserializer, the inputs are gated off to conserve power.

The LVCMOS 3-STATE output buffers are rated for a source/sink current of 2mA at 1.8V. The outputs are active when the DIRI signal is asserted LOW. When the DIRI signal is asserted HIGH, the bi-directional LVCMOS I/Os are in a HIGH-Z state. Under purely capacitive load conditions, the output swings between GND and V_{DDP}.

Unused LVCMOS input buffers must be tied off to either a valid logic LOW or a valid logic HIGH level to prevent static current draw due to a floating input. Unused LVCMOS output should be left floating. Unused bi-directional pins should be connected to GND through a high-value resistor. If a FIN24AC device is configured as an unidirectional serializer, unused data I/O can be treated as unused inputs. If the FIN24AC is hardwired as a deserializer, unused data I/O can be treated as unused outputs.

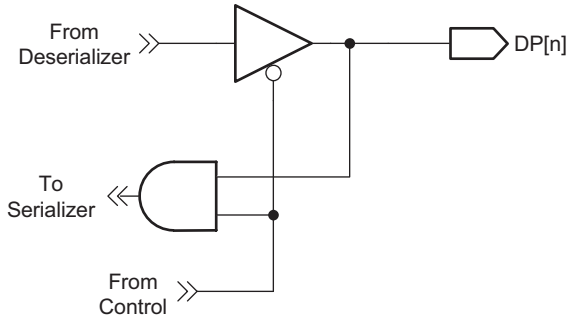

Figure 9. LVCMOS I/O

Differential I/O Circuitry

The FIN24AC employs FSC proprietary CTL I/O technology. CTL is a low-power, low-EMI, differential swing I/O technology. The CTL output driver generates a constant output source and sink current. The CTL input receiver senses the current difference and direction from the output buffer to which it is connected. This differs from LVDS, which uses a constant current source output, but a voltage sense receiver. Like LVDS, an input source termination resistor is required to properly terminate the transmission line. The FIN24AC device incorporates an internal termination resistor on the CKSI receiver and a gated internal termination resistor on the DS input receiver. The gated termination resistor ensures proper termination regardless of direction of data flow. The relatively greater sensitivity of the current sense receiver of CTL allows it to work at much lower current drive and a much lower voltage.

During power-down mode, the differential inputs are disabled and powered down and the differential outputs are placed in a HIGH-Z state. CTL inputs have an inherent fail-safe capability that supports floating inputs. When the CKSI input pair of the serializer is unused, it can reliably be left floating. Alternately both of the inputs can be connected to ground. CTL inputs should never be connected to V_{DD}. When the CKSO output of the deserializer is unused, it should be allowed to float.

Table 2. Word Boundary Data Bits

24-Bit Data Words		24-Bit Data Word with Word Boundary	
Hex	**Binary**	**Hex**	**Binary**
3FFFFFh	0011 1111 1111 1111 1111 1111b	1FFFFFFh	01 1111 1111 1111 1111 1111 1111b
155555h	0101 0101 0101 0101 01010 0101b	1155555h	01 0101 0101 0101 0101 0101 0101b
xxxxxxh	0xxx xxxx xxxx xxxx xxxx xxxxb	1xxxxxxh	01 0xxx xxxx xxxx xxxx xxxx xxxxb

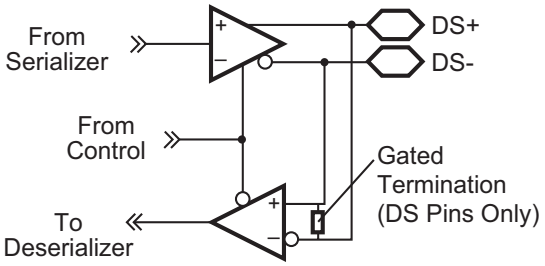

Figure 10. Bi-Directional Differential I/O Circuitry

PLL Circuitry

The CKREF input signal is used to provide a reference to the PLL. The PLL generates internal timing signals capable of transferring data at 26 times the incoming CKREF signal. The output of the PLL is a bit clock that is used to serialize the data. The bit clock is also sent source synchronously with the serial data stream.

There are two ways to disable the PLL: by entering the Mode 0 state (S1 = S2 = 0) or by detecting a LOW on both the S1 and S2 signals. When any of the other modes are entered by asserting either S1 or S2 HIGH and by providing a CKREF signal. The PLL powers up and goes through a lock sequence. Wait the specified number of clock cycles prior to capturing valid data into the parallel port. When the µSerDes chipset transitions from a power-down state (S1, S2 = 0, 0) to a powered state (example S1, S2 = 1, 1), CKP on the deserializer transitions LOW for a short duration, then returns HIGH. Following this, the signal level of the deserializer at CKP corresponds to the serializer signal levels.

An alternate way of powering down the PLL is by stopping the CKREF signal either HIGH or LOW. Internal circuitry detects the lack of transitions and shuts the PLL and serial I/O down. Internal references,however, are not disabled, allowing the PLL to power-up and re-lock in a lesser number of clock cycles than when exiting Mode 0. When a transition is seen on the CKREF signal, the PLL is reactivated.

Application Mode Diagrams Unidirectional Data Transfer

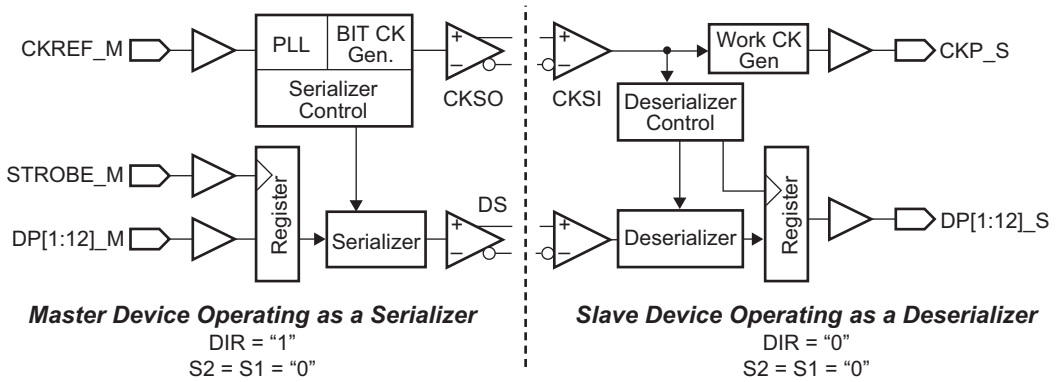

Figure 11. Simplified Block Diagram for Unidirectional Serializer and Deserializer

Figure 11 shows basic operation when a pair of SerDes is configured in an unidirectional operation mode.

In Master Operation, the device:

1. Is configured as a serializer at power-up based on the value of the DIRI signal.
2. Accepts CKREF_M word clock and generates a bit clock with embedded word boundary. This bit clock is sent to the slave device through the CKSO port.
3. Receives parallel data on the rising edge of STROBE_M.
4. Generates and transmits serialized data on the DS signals source synchronously with CKSO.
5. Generates an embedded word clock for each strobe signal.

In Slave Operation, the device:

1. Is configured as a deserializer at power-up based on the value of the DIRI signal.
2. Accepts an embedded word boundary bit clock on CKSI.
3. Deserializes the DS data stream using the CKSI input clock.
4. Writes parallel data onto the DP_S port and generates the CKP_S. CKP_S is only generated when a valid data word occurs.

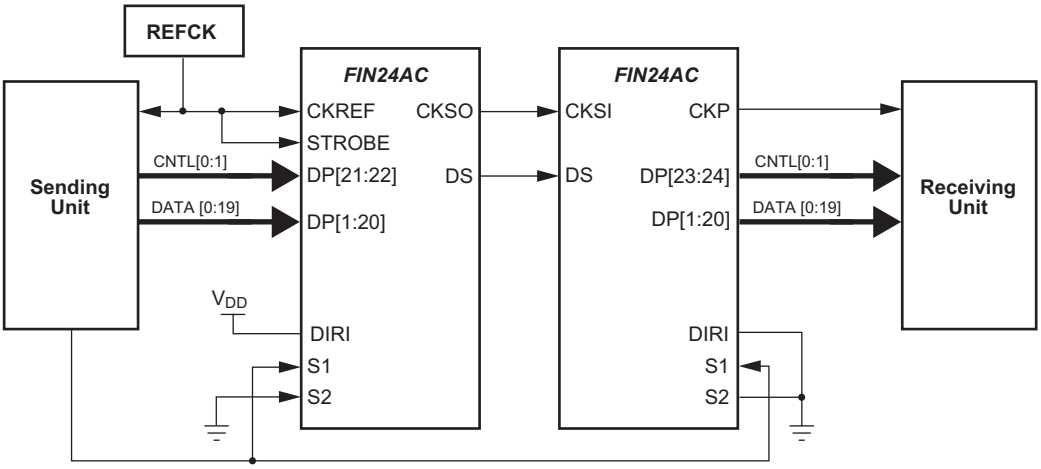

Note:
Data on serializer pins DP[21:22] is output on pins DP[23:24] of the deserializer.

Figure 12. Unidirectional Serializer and Deserializer

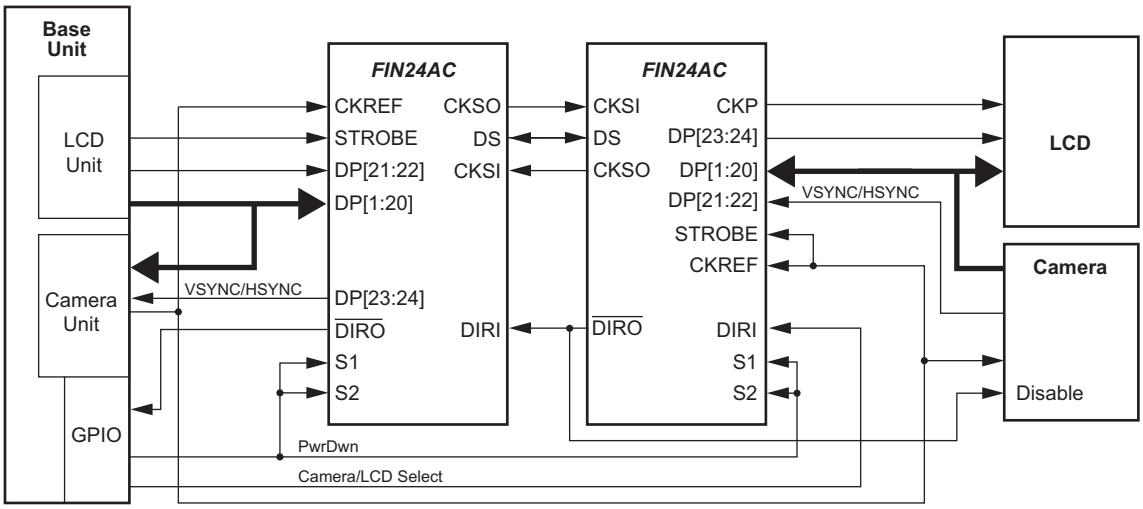

Figure 13. Multiple Units, Unidirectional Signals in Each Direction

Figure 13 shows a half-duplex connectivity diagram. This connectivity allows for two unidirectional data streams to be sent across a single pair of SerDes devices. Data is sent on a frame-by-frame basis. For this mode, there must be some synchronization between when the camera sends its data frame and when the LCD sends its data. One option is to have the LCD send data during the camera blanking period. External logic may be needed for this mode of operation.

Devices alternate frames of data controlled by a direction control and a direction sense. When DIRI on the right-hand FIN24AC is HIGH, data is sent from the camera to the camera interface at the base. When DIRI on the right-hand FIN24AC goes LOW, is sent from the baseband process to the LCD. The direction is then changed at $\overline{\text{DIRO}}$ on the right-hand FIN24AC, indicating to the left-hand FIN24AC to change direction. Data is sent from the base LCD unit to the LCD. The $\overline{\text{DIRO}}$ pin on the left-hand FIN24AC is used to indicate to the base control unit that the signals are changing direction and the LCD is available to receive data. DIRI on the right-hand FIN24AC could typically use a timing reference signal, such as VSYNC from the camera interface, to indicate direction change. A derivative of this signal may be required to make sure that no data is lost in the final data transfer.

Flex Circuit Design Guidelines

The serial I/O information is transmitted at a high serial rate. Care must be taken implementing this serial I/O flex cable. The following best practices should be used when developing the flex cabling or Flex PCB:

- Keep all four differential wires the same length.
- Allow no noisy signals over or near differential serial wires. Example: No LVCMOS traces over differential wires.
- Use only one ground plane or wire over the differential serial wires. Do not run ground over top and bottom.
- Do not place test points on differential serial wires.
- Use differential serial wires a minimum of 2cm away from the antenna.

Absolute Maximum Ratings

Stresses exceeding the absolute maximum ratings may damage the device. The device may not function or be operable above the recommended operating conditions and stressing the parts to these levels is not recommended. In addition, extended exposure to stresses above the recommended operating conditions may affect device reliability. The absolute maximum ratings are stress ratings only.

Symbol	Parameter		Min.	Max.	Unit
V_{DD}	Supply Voltage		-0.5	+4.6	V
	ALL Input/Output Voltage		-0.5	+4.6	V
	LVDS Output Short-Circuit Duration		Continuous		
T_{STG}	Storage Temperature Range		-65	+150	°C
T_J	Maximum Junction Temperature			+150	°C
T_L	Lead Temperature (Soldering, 4 seconds)			+260	°C
ESD	Human Body Model, 1.5kΩ, 100pF	All Pins	> 2		kV
		CKSO, CKSI, DSO to GND	> 7.5		kV

Recommended Operating Conditions

The Recommended Operating Conditions table defines the conditions for actual device operation. Recommended operating conditions are specified to ensure optimal performance to the datasheet specifications. Fairchild does not recommend exceeding them or designing to absolute maximum ratings.

Symbol	Parameter	Min.	Max.	Unit
V_{DDA}, V_{DDS}	Supply Voltage	2.5	2.9	V
V_{DDP}	Supply Voltage	1.65	3.6	V
T_A	Operating Temperature	-30	+70	°C
V_{DDA-PP}	Supply Noise Voltage		100	mVp-p

DC Electrical Characteristics

Values are provided for over-supply voltage and operating temperature ranges, unless otherwise specified.

Symbol	Parameter	Test Conditions		Min.	Typ.(2)	Max.	Unit
LVCMOS I/O							
V_{IH}	Input High Voltage			0.65 x V_{DDP}		V_{DDP}	
V_{IL}	Input Low Voltage			GND		0.35 x V_{DDP}	V
V_{OH}	Output High Voltage	I_{OH} = –2.0 mA	V_{DDP} = 3.3 ± 0.3	0.75 x V_{DDP}			V
			V_{DDP} = 2.5 ± 0.2				
			V_{DDP} = 1.8 ± 0.15				
V_{OL}	Output Low Voltage	I_{OL} = 2.0 mA	V_{DDP} = 3.3 ± 0.3			0.25 x V_{DDP}	V
			V_{DDP} = 2.5 ± 0.2				
			V_{DDP} = 1.8 ± 0.15				
I_{IN}	Input Current	V_{IN} = 0V to 3.6V		–5.0		5.0	µA
DIFFERENTIAL I/O							
I_{ODH}	Output High Source Current	V_{OS} = 1.0V, Figure 14			–1.75		mA
I_{ODL}	Output Low Sink Current	V_{OS} = 1.0V, Figure 14			0.950		mA
I_{OZ}	Disabled Output Leakage Current	CKSO, DSO = 0V to V_{DDS}, S2 = S1 = 0V			±0.1	±5.0	µA
I_{IZ}	Disabled Input Leakage Current	CKSI, DSI = 0V to V_{DDS}, S2 = S1 = 0V			±0.1	±5.0	µA
V_{ICM}	Input Common Mode Range	V_{DDS} = 2.775 ± 5%			V_{GO} + 0.80		V
V_{GO}	Input Voltage Ground Off-set Relative to Driver(3)	See Figure 15			0		V
R_{TRM}	CKSI Internal Receiver Termination Resistor	V_{ID} = 50mV, V_{IC} = 925mV, DIRI = 0, | CKSI+ – CKSI- | = V_{ID}		80.0	100	120	Ω
R_{TRM}	DSI Internal Receiver, Termination Resistor	V_{ID} = 50mV, V_{IC} = 925mV, DIRI = 0, | DSI+ – DSI- | = V_{ID}		80.0	100	120	Ω

Notes:

2. Typical Values are given for V_{DD} = 2.775V and T_A = 25°C. Positive current values refer to the current flowing into device and negative values means current flowing out of pins. Voltage is referenced to GROUND unless otherwise specified (except ΔV_{OD} and V_{OD}).
3. V_{GO} is the difference in device ground levels between the CTL driver and the CTL receiver.

Power Supply Currents

Symbol	Parameter	Test Conditions			Min.	Typ.	Max.	Units
I_{DDA1}	V_{DDA} Serializer Static Supply Current	All DP and Control Inputs at 0V or V_{DD}, No CKREF, S2 = 0, S1 = 1, DIR = 1				450		µA
I_{DDA2}	V_{DDA} Deserializer Static Supply Current	All DP and Control Inputs at 0V or V_{DD}, No CKREF, S2 = 0, S1 = 1, DIR = 0				550		µA
I_{DDS1}	V_{DDS} Serializer Static Supply Current	All DP and Control Inputs at 0V or V_{DD}, No CKREF, S2 = 0, S1 = 1, DIR = 1				4.0		mA
I_{DDS2}	V_{DDS} Deserializer Static Supply Current	All DP and Control Inputs at 0V or V_{DD}, No CKREF, S2 = 0, S1 = 1, DIR = 0				4.5		mA
I_{DD_PD}	V_{DD} Power-Down Supply Current $I_{DD_PD} = I_{DDA} + I_{DDS} + I_{DDP}$	S1 = S2 = 0, All Inputs at GND or V_{DD}				0.1		µA
I_{DD_SER1}	26:1 Dynamic Serializer Power Supply Current $I_{DD_SER1} = I_{DDA} + I_{DDS} + I_{DDP}$	CKREF = STROBE DIRI = H See Figure 16	S2 = L S1 = H	2MHz		9.0		mA
				5MHz		14.0		
			S2 = H S1 = L	5MHz		9.5		
				15MHz		17.0		
			S2 = H S1 = H	10MHz		11.0		
				20MHz		15.5		
I_{DD_DES1}	1:26 Dynamic Deserializer Power Supply Current $I_{DD_DES1} = I_{DDA} + I_{DDS} + I_{DDP}$	CKREF = STROBE DIRI = L See Figure 16	S2 = L S1 = H	2MHz		5.5		mA
				5MHz		6.0		
			S2 = H S1 = L	5MHz		4.0		
				15MHz		5.5		
			S2 = H S1 = H	10MHz		7.5		
				20MHz		10.0		
I_{DD_SER2}	26:1 Dynamic Serializer Power Supply Current $I_{DD_SER2} = I_{DDA} + I_{DDS} + I_{DDP}$	NO CKREF STROBE → Active CKSI = 15X Strobe DIRI = H, See Figure 16		2MHz		8.0		mA
				5MHz		8.5		
				10MHz		10.0		
				15MHz		12.0		

AC Electrical Characteristics

Values are provided for over-supply voltage and operating temperature ranges, unless otherwise specified.

Symbol	Parameter	Test Conditions		Min.	Typ.(4)	Max.	Units
SERIALIZER INPUT OPERATING CONDITIONS							
t_{TCP}	CKREF Clock Period (2MHz–20MHz)	See Figure 20 CKREF = STROBE	S2 = 0 S1 = 1	200	T	500	ns
			S2 = 1 S1 = 0	66.0		200	
			S2 = 1 S1 = 1	50.0		100	
f_{REF}	CKREF Frequency Relative to Strobe Frequency	CKREF does not equal STROBE	S2 = 0 S1 = 1	1.1 x f_{ST}		5.0	MHz
			S2 = 1 S1 = 0			15.0	
			S2 = 1 S1 = 1			20.0	
t_{CPWH}	CKREF Clock High Time			0.2	0.5		T
t_{CPWL}	CKREF Clock Low Time			0.2	0.5		T
t_{CLKT}	LVCMOS Input Transition Time	See Figure 20				90.0	ns
t_{SPWH}	STROBE Pulse Width HIGH/LOW	See Figure 20		(T x 4) / 26		(T x 22) / 26	ns

Symbol	Parameter	Test Conditions		Min.	Typ.(4)	Max.	Units
f_{MAX}	Maximum Serial Data Rate	CKREF x 26	S2 = 0 S1 = 1	52.0		130	Mb/s
			S2 = 1 S1 = 0	130		390	
			S2 = 1 S1 = 1	260		520	
t_{STC}	$DP_{(n)}$ Setup to STROBE	DIRI = 1		2.5			ns
t_{HTC}	$DP_{(n)}$ Hold to STROBE	See Figure 9 (f = 5MHz)		2.0			ns
f_{REF}	CKREF Frequency Relative to Strobe Frequency	CKREF Does Not Equal STROBE		1.1 x f_{STROBE}		20.0	MHz
SERIALIZER AC ELECTRICAL CHARACTERISTICS							
t_{TCCD}	Transmitter Clock Input to Clock Output Delay	See Figure 23, DIRI = 1, CKREF = STROBE		33a + 1.5		35a + 6.5	ns
t_{SPOS}	CKSO Position Relative to DS	See Figure 26(5)		–50.0		250	ps
PLL AC ELECTRICAL CHARACTERISTICS							
t_{TPLLS0}	Serializer PLL Stabilization Time	See Figure 22				200	µs
t_{TPLLD0}	PLL Disable Time Loss of Clock	See Figure 27				30.0	µs
t_{TPLLD1}	PLL Power-Down Time	See Figure 28(6)				20.0	ns
DESERIALIZER INPUT OPERATION CONDITIONS							
t_{S_DS}	Serial Port Setup Time, DS-to-CKSI	See Figure 25(7)		1.4			ns
t_{H_DS}	Serial Port Hold Time, DS-to-CKS	See Figure 25(7)		–250			ps
DESERIALIZER AC ELECTRICAL CHARACTERISTICS							
t_{RCOP}	Deserializer Clock Output (CKP OUT) Period	See Figure 21		50.0	T	500	ns
t_{RCOL}	CKP OUT Low Time	See Figure 21 (Rising Edge Strobe) Serializer Source STROBE = CKREF where a = (1/f) / 26(8)		13a-3		13a+3	ns
t_{RCOH}	CKP OUT High Time			13a-3		13a+3	ns
t_{PDV}	Data Valid to CKP LOW	See Figure 21 (Rising Edge Strobe) where a = (1/f) / 26(8)		8a-6		8a+1	ns
t_{ROLH}	Output Rise Time (20% to 80%)	C_L = 5pF, See Figure 18			2.5		ns
t_{ROHL}	Output Fall Time (80% to 20%)				2.5		ns

Notes:

4. Typical Values are given for V_{DD} = 2.775V and T_A = 25°C. Positive current values refer to the current flowing into device and negative values refer to current flowing out of pins. Voltage is referenced to GROUND unless otherwise specified (except ΔV_{OD} and V_{OD}).
5. Skew is measured form either the rising or falling edge of CKSO clock to the rising or falling edge of data (DSO). Signals are edge aligned. Both outputs should have identical load conditions for this test to be valid.
6. The power-down time is a function of the CKREF frequency prior to CKREF being stopped HIGH or LOW and the state of the S1/S2 mode pins. The specific number of clock cycles required for the PLL to be disabled varies based on the operating mode of the device.
7. Signals are transmitted from the serializer source synchronously. In some cases, data is transmitted when the clock remains at a high state. Skew should only be measured when data and clock are transitioning at the same time. Total measured input skew is a combination of output skew from the serializer, load variations, and ISI and jitter effects.
8. Rising edge of CKP appears approximately 13 bit times after the falling edge of the CKP output. Falling edge of CKP occurs approximately eight bit times after a data transition or six bit times after the falling edge of CKSO. Variation of the data with respect of the CKP signal is due to internal propagation delay differences of the data and CKP path and propagation delay differences on the various data pins. If the CKREF is not equal to STROBE for the serializer, the CKP signal does not maintain a 50% duty cycle. The low time of CKP remains 13 bit times.

Control Logic Timing Controls

Symbol	Parameter	Test Conditions	Min.	Typ.	Max.	Units
t_{PHL_DIR}, t_{PLH_DIR}	Propagation Delay DIRI-to-$\overline{DIRO}$	DIRI LOW-to-HIGH or HIGH-to-LOW			17.0	ns
t_{PLZ}, t_{PHZ}	Propagation Delay DIRI-to-DP	DIRI LOW-to-HIGH			25.0	ns
t_{PZL}, t_{PZH}	Propagation Delay DIRI-to-DP	DIRI HIGH-to-LOW			25.0	ns
t_{PLZ}, t_{PHZ}	Deserializer Disable Time: S0 or S1 to DP	DIRI = 0, S1(2) = 0 and S2(1) = LOW-to-HIGH, Figure 29			25.0	ns
t_{PZL}, t_{PZH}	Deserializer Enable Time: S0 or S1 to DP	DIRI = 0,(9) S1(2) = 0 and S2(1) = LOW-to-HIGH, Figure 29			2.0	µs
t_{PLZ}, t_{PHZ}	Serializer Disable Time: S0 or S1 to CKSO, DS	DIRI = 1, S1(2) = 0 and S2(1) = HIGH-to-LOW, Figure 28			25.0	ns
t_{PZL}, t_{PZH}	Serializer Enable Time: S0 or S1 to CKSO, DS	DIRI = 1, S1(2) and S2(1) = LOW-to-HIGH, Figure 28			65.0	ns

Note:

9. Deserializer Enable Time includes the amount of time required for internal voltage and current references to stabilize. This time is significantly less than the PLL lock time and does not impact overall system startup time.

Capacitance

Symbol	Parameter	Test Conditions	Min.	Typ.	Max.	Units
C_{IN}	Capacitance of Input Only Signals, CKREF, STROBE, S1, S2, DIRI	DIRI = 1, S1 = S2 = 0, V_{DD} = 2.5V		2.0		pF
C_{IO}	Capacitance of Parallel Port Pins $DP_{1:12}$	DIRI = 1, S1 = S2 = 0, V_{DD} = 2.5V		2.0		pF
$C_{IO\text{-}DIFF}$	Capacitance of Differential I/O Signals	DIRI = 0, S1 = S2 = 0, V_{DD} = 2.775V		2.0		pF

AC Loading and Waveforms

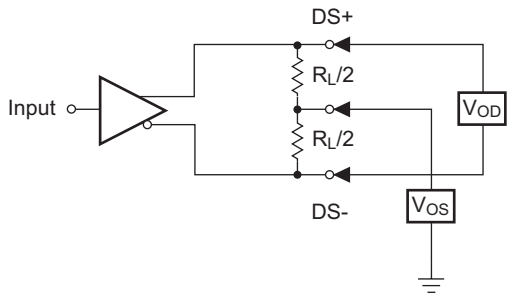

Figure 14. Differential CTL Output DC Test Circuit

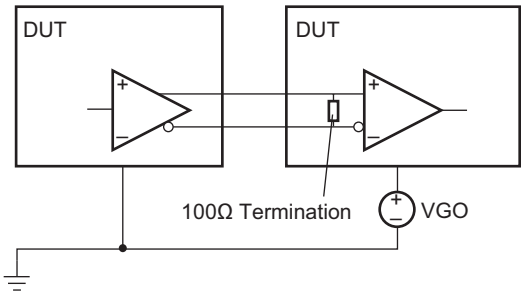

Figure 15. CTL Input Common Mode Test Circuit

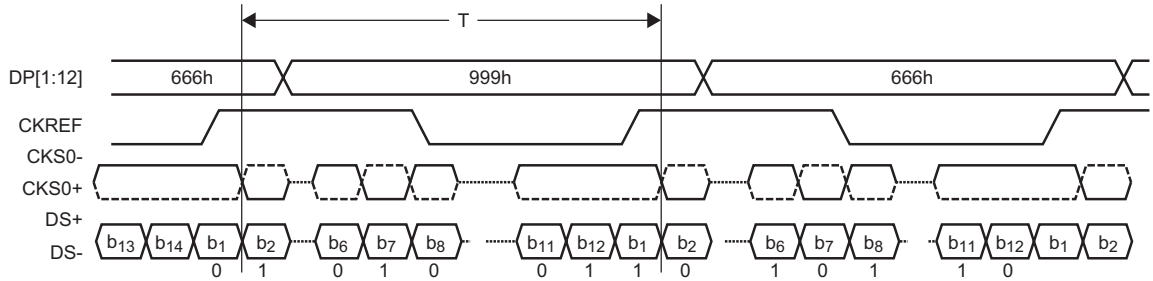

Note:
The "worst-case" test pattern produces a maximum toggling of internal digital circuits, CTL I/O and LVCMOS I/O with the PLL operating at the reference frequency, unless otherwise specified. Maximum power is measured at the maximum V_{DD} values. Minimum values are measured at the minimum V_{DD} values. Typical values are measured at V_{DD} = 2.5V.

Figure 16. "Worst-Case" Serializer Test Pattern

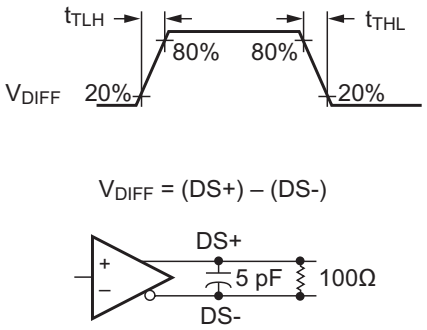

Figure 17. CTL Output Load and Transition Times

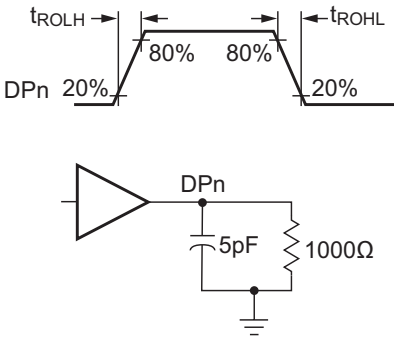

Figure 18. LVCMOS Output Load and Transition Times

AC Loading and Waveforms (Continued)

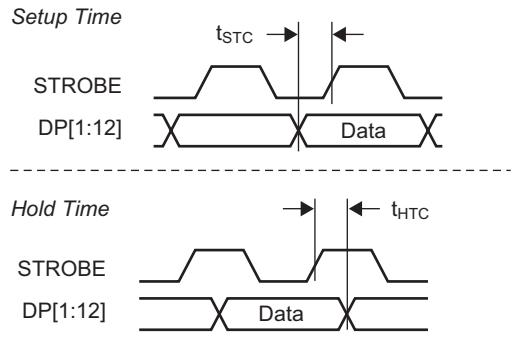

Setup: MODE0 = “0” or “1”, MODE1 = “1”, SER/$\overline{\text{DES}}$ = “1”

Figure 19. Serial Setup and Hold Time

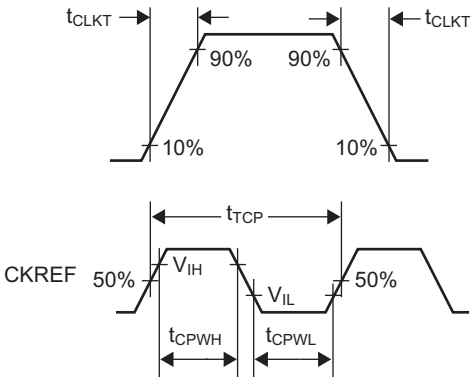

Figure 20. LVCMOS Clock Parameters

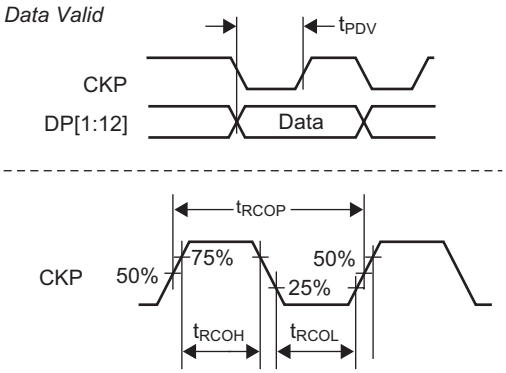

Setup: EN_DES = “1”, CKSI, and DSI are valid signals.

Figure 21. Deserializer Data Valid Window Time and Clock Output Parameters

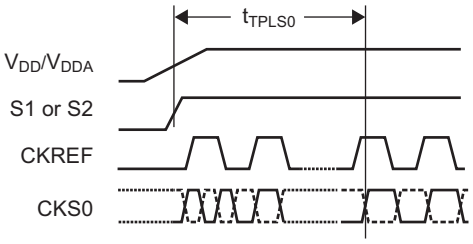

Note: CKREF signal is free running.

Figure 22. Serializer PLL Lock Time

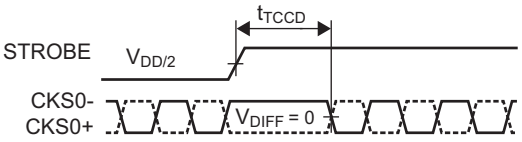

Note: STROBE = CKREF

Figure 23. Serializer Clock Propagation Delay

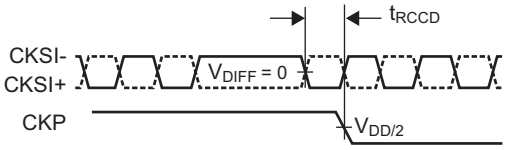

Figure 24. Deserializer Clock Propagation Delay

AC Loading and Waveforms (Continued)

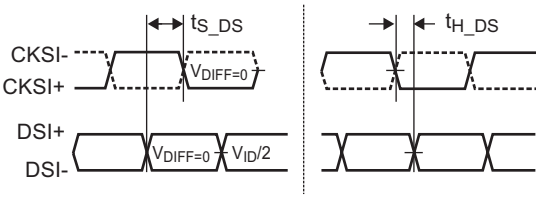

Figure 25. Differential Input Setup and Hold Times

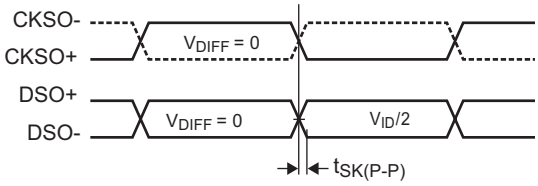

Note: Data is typically edge aligned with the clock.

Figure 26. Differential Output Signal Skew

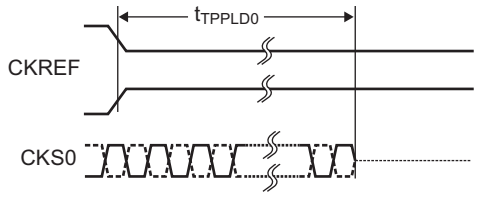

Note: CKREF Signal can be stopped either HIGH or LOW.

Figure 27. PLL Loss of Clock Disable Time

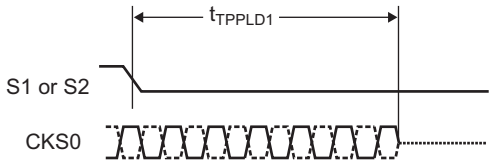

Figure 28. PLL Power-Down Time

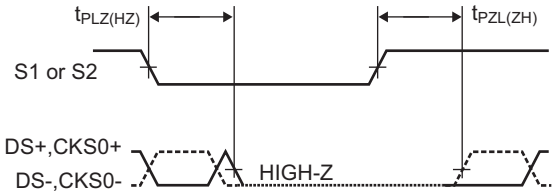

Note: CKREF must be active and PLL must be stable.

Figure 29. Serializer Enable and Disable Time

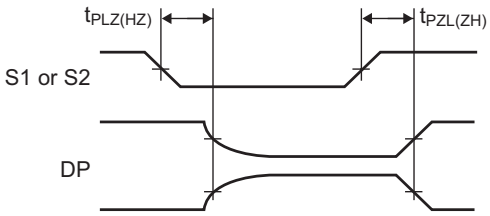

Note: If S1(2) transitioning, S2(1) must = 0 for test to be valid.

Figure 30. Deserializer Enable and Disable Times

Tape and Reel Specification

Dimensions are in millimeters unless otherwise noted.

BGA Embossed Tape Dimension

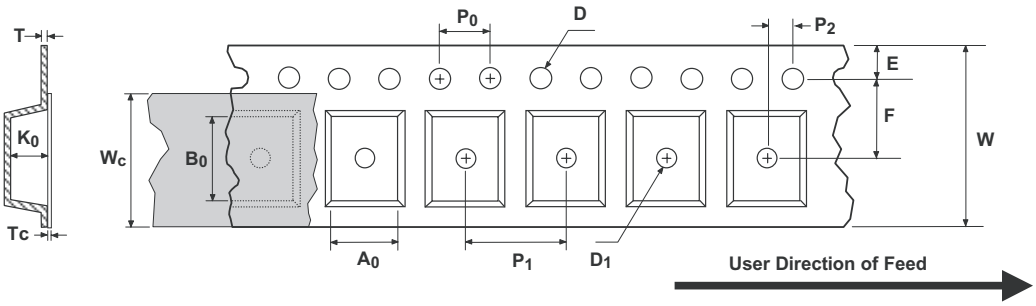

Package	A_0 ±0.1	B_0 ±0.1	D ±0.05	D_1 Min.	E ±0.1	F ±0.1	K_0 ±0.1	P_1 Typ.	P_0 Typ.	P_2 ±0/05	T Typ.	T_C ±0.005	W ±0.3	W_C Typ.
3.5 x 4.5	TBD	TBD	1.55	1.5	1.75	5.5	1.1	8.0	4.0	2.0	0.3	0.07	12.0	9.3

Note:

10. A0, B0, and K0 dimensions are determined with respect to the EIA/JEDEC RS-481 rotational and lateral movement requirements (see sketches A, B, and C).

10° maximum component rotation

Sketch A (Side or Front Sectional View)

Component Rotation

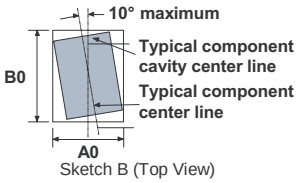

Sketch B (Top View)

Component Rotation

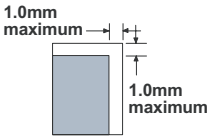

Sketch C (Top View)

Component lateral movement

Shipping Reel Dimension

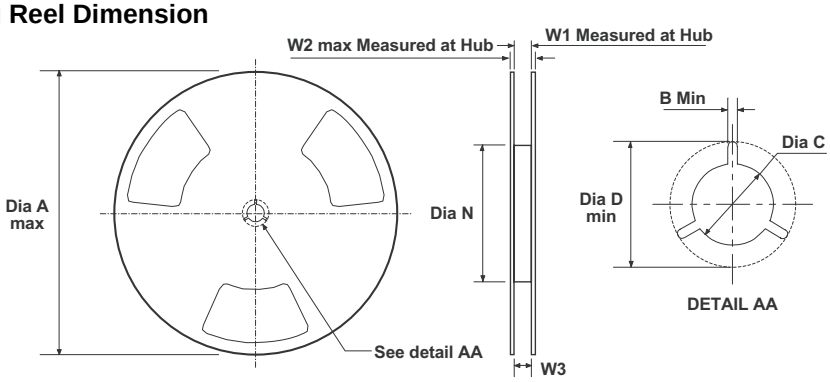

Tape Width	Dia A Max.	Dim B Min.	Dia C +0.5/–0.2	Dia D Min.	Dim N Min.	Dim W1 +2.0/–0	Dim W2 Max.	Dim W3 (LSL–USL)
8	330	1.5	13.0	20.2	178	8.4	14.4	7.9 ~ 10.4
12	330	1.5	13.0	20.2	178	12.4	18.4	11.9 ~ 15.4
16	330	1.5	13.0	20.2	178	16.4	22.4	15.9 ~ 19.4

Tape and Reel Specification (Continued)

Dimensions are in millimeters unless otherwise noted.

MLP Embossed Tape Dimension

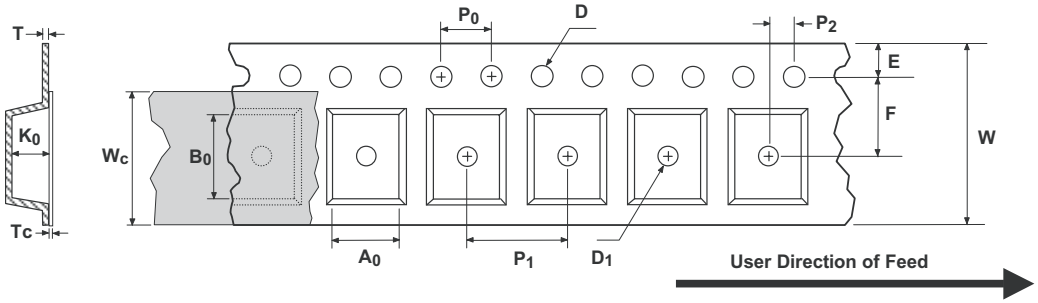

Package	A_0 ±0.1	B_0 ±0.1	D ±0.05	D_1 Min.	E ±0.1	F ±0.1	K_0 ±0.1	P_1 Typ.	P_0 Typ.	P_2 ±0/05	T Typ.	T_C ±0.005	W ±0.3	W_C Typ.
5 x 5	5.35	5.35	1.55	1.5	1.75	5.5	1.4	8	4	2.0	0.3	0.07	12	9.3
6 x 6	6.30	6.30	1.55	1.5	1.75	5.5	1.4	8	4	2.0	0.3	0.07	12	9.3

Note:

11. Ao, Bo, and Ko dimensions are determined with respect to the EIA/JEDEC RS-481 rotational and lateral movement requirements (see sketches A, B, and C).

10° maximum component rotation

Sketch A (Side or Front Sectional View)

Component Rotation

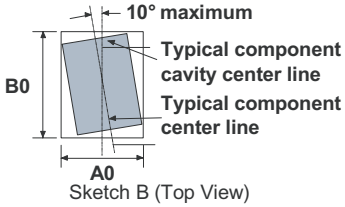

Sketch B (Top View)

Component Rotation

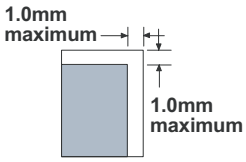

Sketch C (Top View)

Component lateral movement

Shipping Reel Dimension

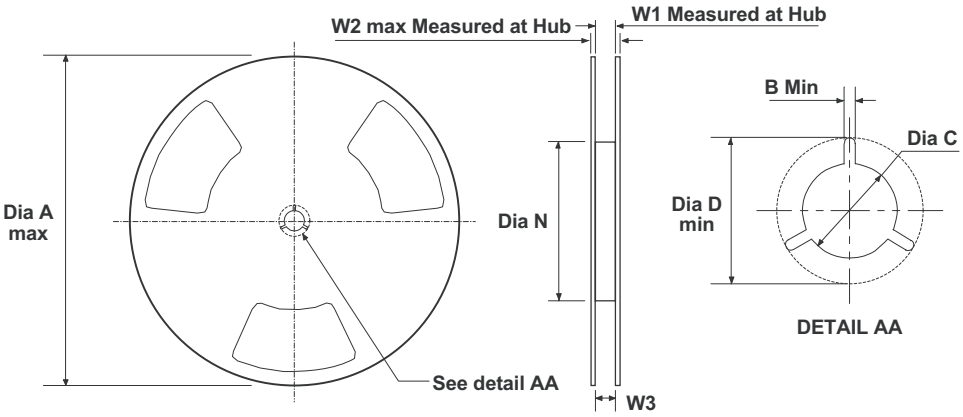

Tape Width	Dia A Max.	Dim B Min.	Dia C +0.5/–0.2	Dia D Min.	Dim N Min.	Dim W1 +2.0/–0	Dim W2 Max.	Dim W3 (LSL–USL)
8	330	1.5	13	20.2	178	8.4	14.4	7.9 ~ 10.4
12	330	1.5	13	20.2	178	12.4	18.4	11.9 ~ 15.4
16	330	1.5	13	20.2	178	16.4	22.4	15.9 ~ 19.4

Physical Dimensions

Dimensions are in millimeters unless otherwise noted.

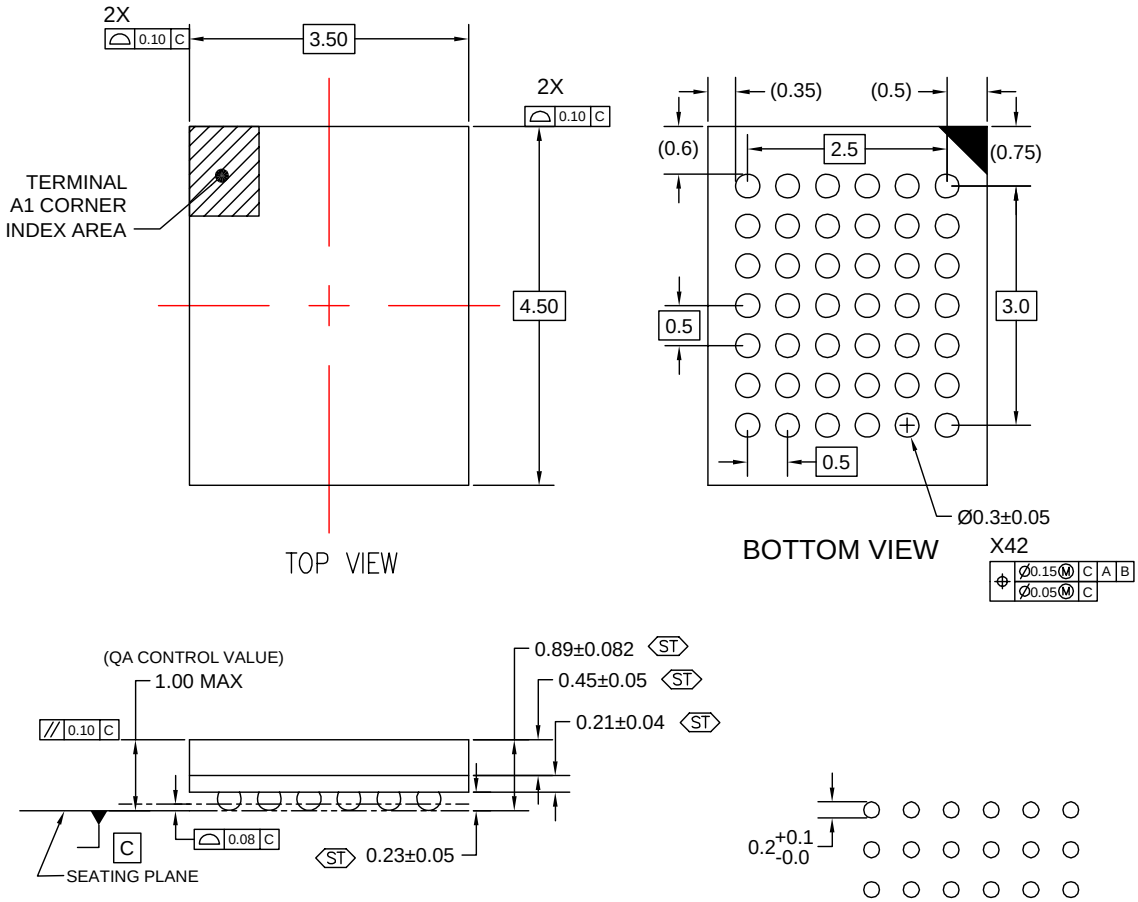

NOTES:

A. CONFORMS TO JEDEC REGISTRATION MO–195,

B. DIMENSIONS ARE IN MILLIMETERS.

C. DIMENSIONS AND TOLERANCES PER ASME Y14.5M, 1994

D. STATISTICAL TOLERANCING FOR REFERENCE REFER TO MAX DIMENSION FOR QA INSPECTION

E. LAND PATTERN RECOMENDATION PER IPC–7351 TABLE14–15 LAND PATTERN NAME PER TABLE 3–15: BGA50P+6X7–42

BGA42ArevB

Figure 31. Pb-Free, 42-Ball, Ultra Small Scale Ball Grid Array (USS-BGA), JEDEC MO-195, 3.5mm Wide

Physical Dimensions (Continued)

Dimensions are in millimeters unless otherwise noted.

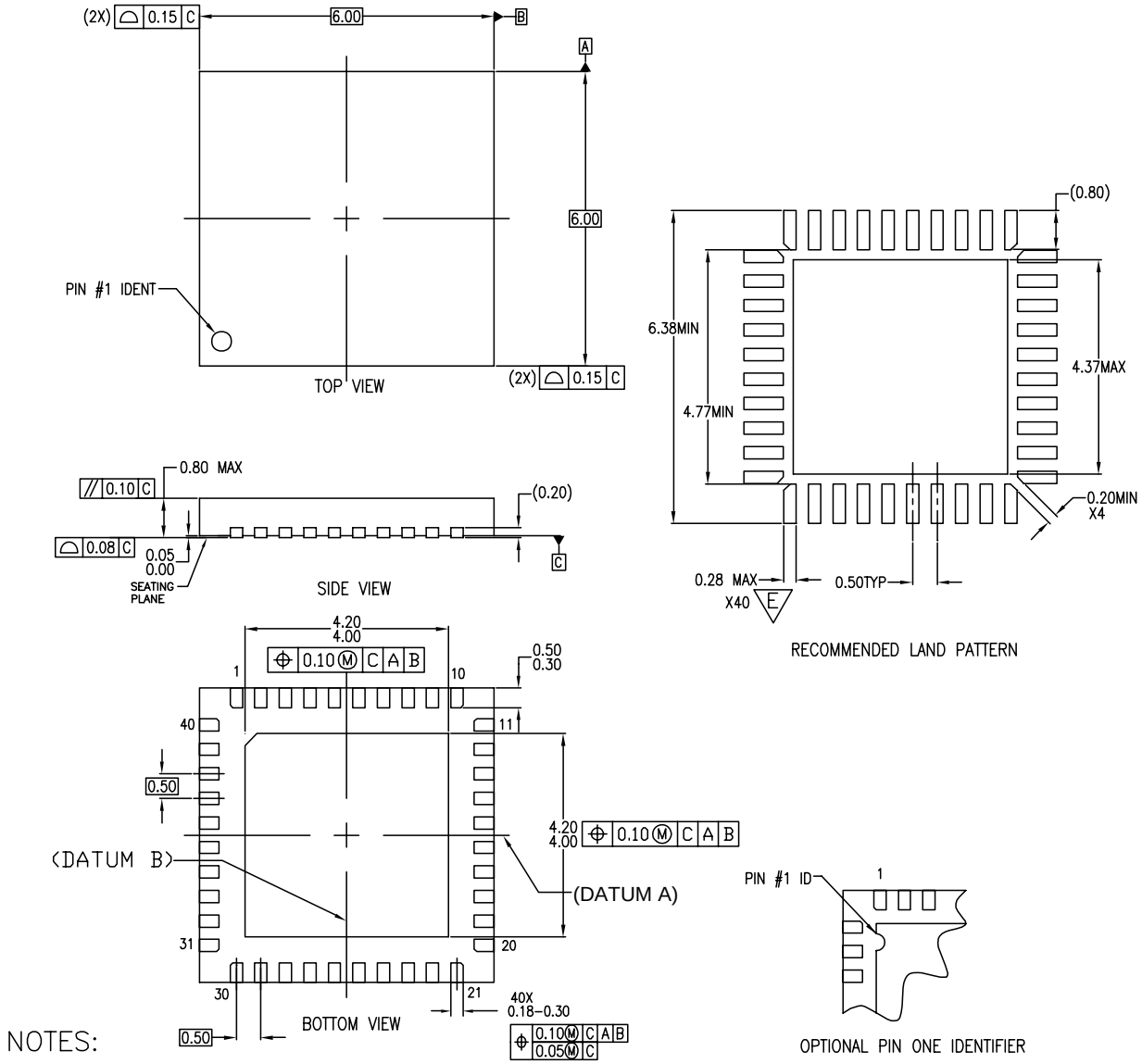

NOTES:

A. CONFORMS TO JEDEC REGISTRATION MO-220, VARIATION WJJD-2 WITH EXCEPTION THIS IS A SAWN VERSION.

B. DIMENSIONS ARE IN MILLIMETERS.

C. DIMENSIONS AND TOLERANCES PER

D. LAND PATTERN PER IPC SM-782 FABRICATION AND ASSEMBLY TOLERANCES OF 0.1 MM APPLIED

E. WIDTH REDUCED TO AVOID SOLDER BRIDGING.

G. DIMENSIONS ARE NOT INCLUSIVE OF BURRS, MOLD FLASH, NOR TIE BAR PROTRUSIONS.

MLP40Arev2

Figure 32. Pb-Free, 40-Terminal, Molded Leadless Package (MLP), Quad, JEDEC MO-220, 6mm Square

TRADEMARKS

The following are registered and unregistered trademarks Fairchild Semiconductor owns or is authorized to use and is not intended to be an exhaustive list of all such trademarks.

ACEx™	FACT Quiet Series™	OCX™	SILENT SWITCHER®	UniFET™
ActiveArray™	GlobalOptoisolator™	OCXPro™	SMART START™	VCX™
Bottomless™	GTO™	OPTOLOGIC®	SPM™	Wire™
Build it Now™	HiSeC™	OPTOPLANAR™	Stealth™	
CoolFET™	I^2C™	PACMAN™	SuperFET™	
CROSSVOLT™	*i-Lo*™	POP™	SuperSOT™-3	
DOME™	ImpliedDisconnect™	Power247™	SuperSOT™-6	
EcoSPARK™	IntelliMAX™	PowerEdge™	SuperSOT™-8	
E^2CMOS™	ISOPLANAR™	PowerSaver™	SyncFET™	
EnSigna™	LittleFET™	PowerTrench®	TCM™	
FACT®	MICROCOUPLER™	QFET®	TinyBoost™	
FAST®	MicroFET™	QS™	TinyBuck™	
FASTr™	MicroPak™	QT Optoelectronics™	TinyPWM™	
FPS™	MICROWIRE™	Quiet Series™	TinyPower™	
FRFET™	MSX™	RapidConfigure™	TinyLogic®	
	MSXPro™	RapidConnect™	TINYOPTO™	
Across the board. Around the world.™		µSerDes™	TruTranslation™	
The Power Franchise®		ScalarPump™	UHC®	
Programmable Active Droop™				

DISCLAIMER

FAIRCHILD SEMICONDUCTOR RESERVES THE RIGHT TO MAKE CHANGES WITHOUT FURTHER NOTICE TO ANY PRODUCTS HEREIN TO IMPROVE RELIABILITY, FUNCTION, OR DESIGN. FAIRCHILD DOES NOT ASSUME ANY LIABILITY ARISING OUT OF THE APPLICATION OR USE OF ANY PRODUCT OR CIRCUIT DESCRIBED HEREIN; NEITHER DOES IT CONVEY ANY LICENSE UNDER ITS PATENT RIGHTS, NOR THE RIGHTS OF OTHERS. THESE SPECIFICATIONS DO NOT EXPAND THE TERMS OF FAIRCHILD'S WORLDWIDE TERMS AND CONDITIONS, SPECIFICALLY THE WARRANTY THEREIN, WHICH COVERS THESE PRODUCTS.

LIFE SUPPORT POLICY

FAIRCHILD'S PRODUCTS ARE NOT AUTHORIZED FOR USE AS CRITICAL COMPONENTS IN LIFE SUPPORT DEVICES OR SYSTEMS WITHOUT THE EXPRESS WRITTEN APPROVAL OF FAIRCHILD SEMICONDUCTOR CORPORATION.

As used herein:

1. Life support devices or systems are devices or systems which, (a) are intended for surgical implant into the body, or (b) support or sustain life, or (c) whose failure to perform when properly used in accordance with instructions for use provided in the labeling, can be reasonably expected to result in significant injury to the user.

2. A critical component is any component of a life support device or system whose failure to perform can be reasonably expected to cause the failure of the life support device or system, or to affect its safety or effectiveness.

PRODUCT STATUS DEFINITIONS

Definition of Terms

Datasheet Identification	Product Status	Definition
Advance Information	Formative or In Design	This datasheet contains the design specifications for product development. Specifications may change in any manner without notice.
Preliminary	First Production	This datasheet contains preliminary data, and supplementary data will be published at a later date. Fairchild Semiconductor reserves the right to make changes at any time without notice to improve design.
No Identification Needed	Full Production	This datasheet contains final specifications. Fairchild Semiconductor reserves the right to make changes at any time without notice to improve design.
Obsolete	Not In Production	This datasheet contains specifications on a product that has been discontinued by Fairchild semiconductor. The datasheet is printed for reference information only.

Rev. I22

О компании

ООО "ТрейдЭлектроникс" - это оперативные поставки широкого спектра электронных компонентов отечественного и импортного производства напрямую от производителей и с крупнейших мировых складов. Реализуемая нашей компанией продукция насчитывает более полумиллиона наименований.

Благодаря этому наша компания предлагает к поставке практически не ограниченный ассортимент компонентов как оптовыми, мелкооптовыми партиями, так и в розницу.

Наличие собственной эффективной системы логистики обеспечивает надежную поставку продукции по конкурентным ценам в точно указанные сроки.

Срок поставки со стоков в **Европе и Америке – от 3 до 14 дней.**

Срок поставки из **Азии – от 10 дней.**

Благодаря развитой сети поставщиков, помогаем в поиске и приобретении экзотичных или снятых с производства компонентов.

Предоставляем спец цены на элементы для создания инженерных сэмплов.

Упорный труд, качественный результат дают нам право быть уверенными в себе и надежными для наших клиентов.

Наша компания это:

- Гарантия качества поставляемой продукции
- Широкий ассортимент
- Минимальные сроки поставок
- Техническая поддержка
- Подбор комплектации
- Индивидуальный подход
- Гибкое ценообразование

Наша организация особенно сильна в поставках модулей, микросхем, пассивных компонентов, ксайленсах (XC), EPF, EPM и силовой электроники.

Большой выбор предлагаемой продукции, различные виды оплаты и доставки, позволят Вам сэкономить время и получить максимум выгоды от сотрудничества с нами!

Trade Electronics.ru

гарантия бесперебойности производства и качества выпускаемой продукции

Перечень производителей, продукцию которых мы поставляем на российский рынок

AMD
ANALOG DEVICES
BOURNS
Coilcraft
élantec Semiconductor, Inc.
HARRIS
Infineon
JRC
MICREL
MOTOROLA
nichicon
PHILIPS
ROHM
SGS-THOMSON
Sipex
TAIYO YUDEN
TOKO
ZILOG
Winbond
Allegro
ATMEL
BURR - BROWN
EXAR
HITACHI
intel
Lattice
muRata
OKI
QUALCOMM
SAMSUNG
SHARP
SONY
TDK
TOSHIBA
KYOCERA
ALTERA
AVX
CITILYST
CYPRESS
FAIRCHILD SEMICONDUCTOR
HOLTEK
International IOR Rectifier
LINEAR TECHNOLOGY
MITSUBISHI
National Semiconductor
ON Semiconductor
REALTEK
SANYO
SHINDENGEN
SGS
TECCOR
TUNDRA
XILINX
Amphenol
Bay Linear
CIRRUS LOGIC
DALLAS
FUJITSU
IDT
intersil
MAXIM
molex
NEC
Panasonic
RENESAS
SII
SIEMENS
ST
Texas Instruments
VISHAY
ZETEX SEMICONDUCTORS

Trade Electronics.ru

гарантия бесперебойности производства и качества выпускаемой продукции

С удовольствием будем прорабатывать для Вас поставки всех необходимых компонентов по текущим запросам для скорейшего выявления групп элементов, по которым сотрудничество именно с нашей компанией будет для Вас максимально выгодным!

С уважением,

Менеджер отдела продаж ООО

«Трейд Электроникс»

Шишлаков Евгений

8 (495)668-30-28 доб 169

manager28@tradeelectronics.ru

http://www.tradeelectronics.ru/