Wideband, 40 dB Isolation at 1 GHz, CMOS 1.65 V to 2.75 V, SPST Switches

ADG901/ADG902

FEATURES

Wideband switch: –3 dB @ 4.5 GHz
ADG901—absorptive switch
ADG902—reflective switch
High off isolation: 40 dB @ 1 GHz
Low insertion loss: 0.8 dB @1 GHz
Single 1.65 V to 2.75 V power supply
CMOS/LVTTL control logic
8-lead MSOP and tiny 3 mm × 3 mm LFCSP packages
Low power consumption (<1 µA)

APPLICATIONS

Wireless communications
General purpose RF switching
Dual-band applications
High speed filter selection
Digital transceiver front end switch
IF switching
Tuner modules
Antenna diversity switching list

FUNCTIONAL BLOCK DIAGRAM

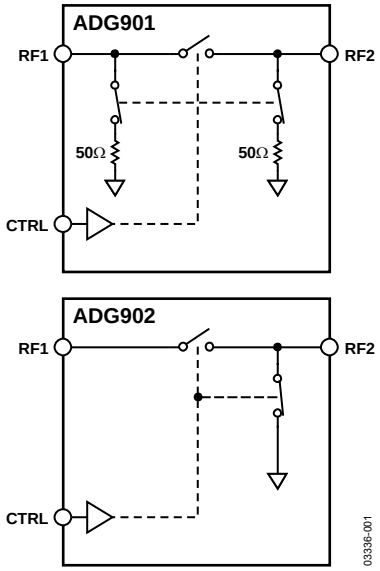

Figure 1.

GENERAL DESCRIPTION

The ADG901/ADG902 are wideband switches that use a CMOS process to provide high isolation and low insertion loss to 1 GHz. The ADG901 is an absorptive (matched) switch with 50 Ω terminated shunt legs, while the ADG902 is a reflective switch. These devices are designed such that the isolation is high over the dc to 1 GHz frequency range. They have on-board CMOS control logic, thus eliminating the need for external controlling circuitry. The control inputs are both CMOS and LVTTL compatible. The low power consumption of these CMOS devices makes them ideally suited to wireless applications and general-purpose high frequency switching.

PRODUCT HIGHLIGHTS

1. –40 dB Off Isolation @ 1 GHz
2. 0.8 dB Insertion Loss @ 1 GHz
3. Tiny 8-Lead MSOP/LFCSP Packages

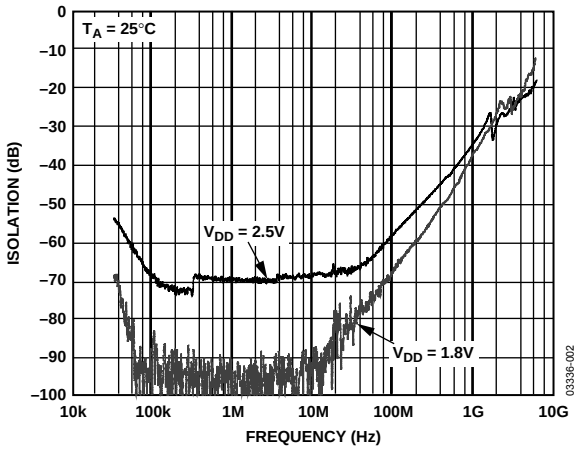

Figure 2. Off Isolation vs. Frequency

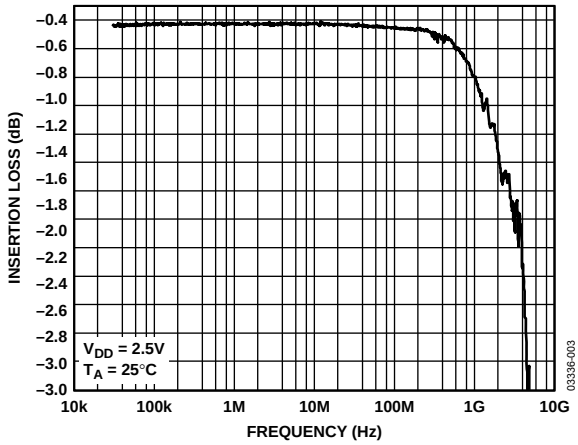

Figure 3. Insertion Loss vs. Frequency

Rev. B
Information furnished by Analog Devices is believed to be accurate and reliable. However, no responsibility is assumed by Analog Devices for its use, nor for any infringements of patents or other rights of third parties that may result from its use. Specifications subject to change without notice. No license is granted by implication or otherwise under any patent or patent rights of Analog Devices. Trademarks and registered trademarks are the property of their respective owners.

One Technology Way, P.O. Box 9106, Norwood, MA 02062-9106, U.S.A.
Tel: 781.329.4700 **www.analog.com**
Fax: 781.461.3113
© 2005 Analog Devices, Inc. All rights reserved.

TABLE OF CONTENTS

Features ... 1
Applications ... 1
Functional Block Diagram ... 1
General Description ... 1
Product Highlights ... 1
Revision History ... 2
Specifications ... 3
Absolute Maximum Ratings ... 4
ESD Caution ... 4
Pin Configuration and Function Descriptions ... 5
Typical Performance Characteristics ... 6
Terminology ... 8
Test Circuits ... 9
Applications ... 10
Absorptive vs. Reflective Switches ... 10
ADG90x Evaluation Board ... 11
Outline Dimensions ... 12
Ordering Guide ... 13

REVISION HISTORY

10/05—Rev. A to Rev. B

Changes to Figure 1 ... 1
Changes to Table 1 ... 3
Changes to Ordering Guide ... 12

10/04—Rev. 0 to Rev. A.

Changes to Features ... 1
Changes to Product Highlights ... 1
Changes to Specifications ... 2
Changes to Ordering Guide ... 3
Change to ADG9xx Evaluation Board Section ... 9
Changes to Ordering Guide ... 10

8/03—Revision 0: Initial Version

SPECIFICATIONS

V_{DD} = 1.65 V to 2.75 V, GND = 0 V, input power = 0 dBm, all specifications T_{MIN} to T_{MAX}, unless otherwise specified.[1]

Table 1.

Parameter	Symbol	Conditions	B Version Min	Typ[2]	Max	Unit
AC ELECTRICAL CHARACTERISTICS						
Operating Frequency[3]			DC		2.5	GHz
−3 dB Frequency[4]					4.5	GHz
Input Power[4]		0 V dc bias			7	dBm
		0.5 V dc bias			16	dBm
Insertion Loss	S_{21}, S_{12}	DC to 100 MHz; V_{DD} = 2.5 V ± 10%		0.4	0.7	dB
		500 MHz; V_{DD} = 2.5 V ± 10%		0.5	0.8	dB
		1000 MHz; V_{DD} = 2.5 V ± 10%		0.8	1.25	dB
Isolation—RF1 to RF2	S_{21}, S_{12}	100 MHz	60	61		dB
CP Package		500 MHz	43	45		dB
		1000 MHz	34	40		dB
Isolation—RF1 to RF2	S_{21}, S_{12}	100 MHz	51	60		dB
RM Package		500 MHz	37.5	47		dB
		1000 MHz	31	37		dB
Return Loss (On Channel)[4]	S_{11}, S_{22}	DC to 100 MHz	20	28		dB
		500 MHz	23	29		dB
		1000 MHz	25	28		dB
Return Loss (Off Channel)[4]	S_{11}, S_{22}	DC to 100 MHz	18	23		dB
		500 MHz	17	21		dB
		1000 MHz	15	19		dB
On Switching Time[4]	t_{ON}	50% CTRL to 90% RF		3.6	6	ns
Off Switching Time[4]	t_{OFF}	50% CTRL to 10% RF		5.8	9.5	ns
Rise Time[4]	t_{RISE}	10% to 90% RF		3.1	5.5	ns
Fall Time[4]	t_{FALL}	90% to 10% RF		6.0	8.5	ns
1 dB Compression[4]	$P_{-1\ dB}$	1000 MHz		17		dBm
Third-Order Intermodulation Intercept	IP3	900 MHz/901 MHz, 4 dBm	28.5	36		dBm
Video Feedthrough[5]				2.5		mV p-p
DC ELECTRICAL CHARACTERISTICS						
Input High Voltage	V_{INH}	V_{DD} = 2.25 V to 2.75 V	1.7			V
	V_{INH}	V_{DD} = 1.65 V to 1.95 V	0.65 V_{DD}			V
Input Low Voltage	V_{INL}	V_{DD} = 2.25 V to 2.75 V			0.7	V
	V_{INL}	V_{DD} = 1.65 V to 1.95 V			0.35 V_{DD}	V
Input Leakage Current	I_I	$0 \le V_{IN} \le 2.75$ V		±0.1	±1	µA
CAPACITANCE[4]						
RF1/RF2, RF Port On Capacitance	C_{RF} on	f = 1 MHz		1.2		pF
CTRL Input Capacitance	C_{CTRL}	f = 1 MHz		2.1		pF
POWER REQUIREMENTS						
V_{DD}			1.65		2.75	V
Quiescent Power Supply Current	I_{DD}	Digital inputs = 0 V or V_{DD}		0.1	1	µA

[1] Temperature range for B version: −40°C to +85°C.
[2] Typical values are at V_{DD} = 2.5 V and 25°C, unless otherwise specified.
[3] Point at which insertion loss degrades by 1 dB.
[4] Guaranteed by design, not subject to production test.
[5] The dc transience at the output of any port of the switch when the control voltage is switched from high to low or low to high in a 50 Ω test setup, measured with 1 ns rise time pulses and 500 MHz bandwidth.

ABSOLUTE MAXIMUM RATINGS

T_A = 25°C, unless otherwise specified.

Table 2.

Parameter	Rating
V_{DD} to GND	−0.5 V to +4 V
Inputs to GND	−0.5 V to V_{DD} + 0.3 V[1]
Continuous Current	30 mA
Input Power	18 dBm
Operating Temperature Range	
Industrial (B Version)	−40°C to +85°C
Storage Temperature Range	−65°C to +150°C
Junction Temperature	150°C
MSOP Package	
θ_{JA} Thermal Impedance	206°C/W
LFCSP Package	
θ_{JA} Thermal Impedance (2-Layer board)	84°C/W
θ_{JA} Thermal Impedance (4-Layer board)	48°C/W
Lead Temperature, Soldering (10 sec)	300°C
IR Reflow, Peak Temperature (<20 sec)	235°C
ESD	1 kV

[1] RF1/RF2 off port inputs to ground: −0.5 V to V_{DD} − 0.5 V

Stresses above those listed under Absolute Maximum Ratings may cause permanent damage to the device. This is a stress rating only; functional operation of the device at these or any other conditions above those indicated in the operational section of this specification is not implied. Exposure to absolute maximum rating conditions for extended periods may affect device reliability.

ESD CAUTION

ESD (electrostatic discharge) sensitive device. Electrostatic charges as high as 4000 V readily accumulate on the human body and test equipment and can discharge without detection. Although this product features proprietary ESD protection circuitry, permanent damage may occur on devices subjected to high energy electrostatic discharges. Therefore, proper ESD precautions are recommended to avoid performance degradation or loss of functionality.

PIN CONFIGURATION AND FUNCTION DESCRIPTIONS

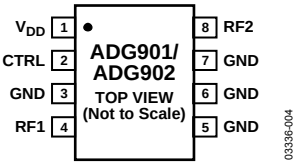

Figure 4. 8-Lead MSOP (RM-8) and
8-Lead 3 mm × 3 mm LFCSP (CP-8 – Exposed pad tied to substrate, GND

Table 3. Pin Function Descriptions

Pin No.	Mnemonic	Description
1	V_{DD}	Power Supply Input. These parts can be operated from 1.65 V to 2.75 V; V_{DD} should be decoupled to GND.
2	CTRL	CMOS or LVTTL Logic Level. CTRL input should not exceed V_{DD}.
		0 → RF1 Isolated from RF2.
		1 → RF1 to RF2.
3, 5, 6, 7	GND	Ground Reference Point for All Circuitry on the Part.
4	RF1	RF1 Port.
8	RF2	RF2 Port.

Table 4. Truth Table

CTRL	Signal Path
0	RF1 isolated from RF2
1	RF1 to RF2

TYPICAL PERFORMANCE CHARACTERISTICS

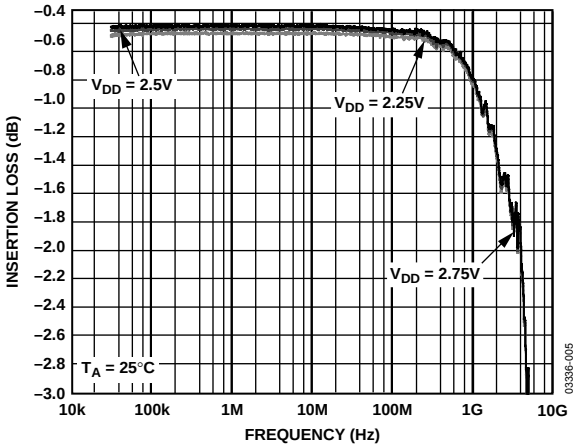

Figure 5. Insertion Loss vs. Frequency over Supplies (S12 and S21)

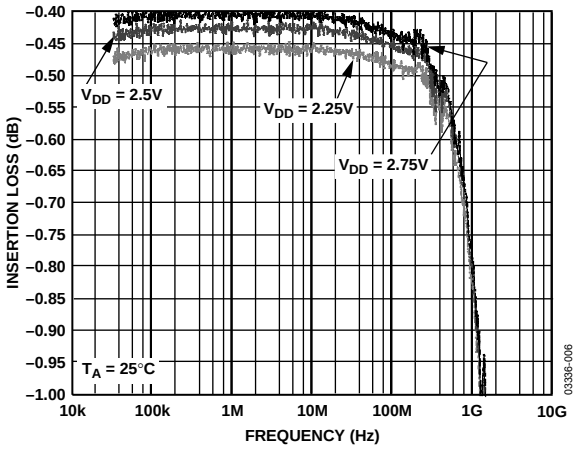

Figure 6. Insertion Loss vs. Frequency over Supplies (S12 and S21) (Zoomed Figure 5 Plot)

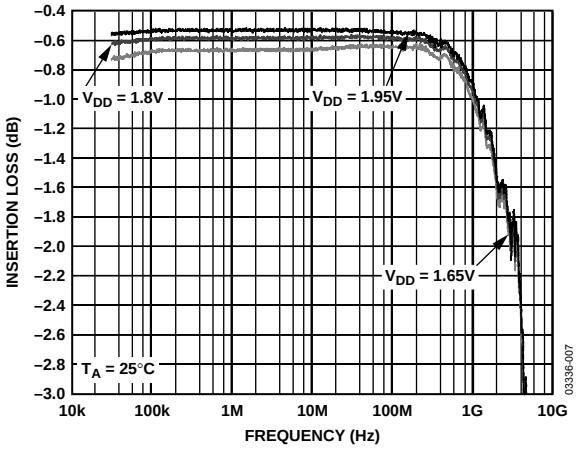

Figure 7. Insertion Loss vs. Frequency over Supplies (S12 and S21)

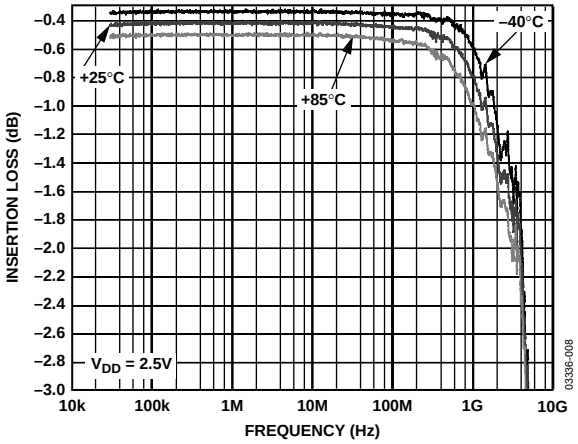

Figure 8. Insertion Loss vs. Frequency over Temperature (S12 and S21)

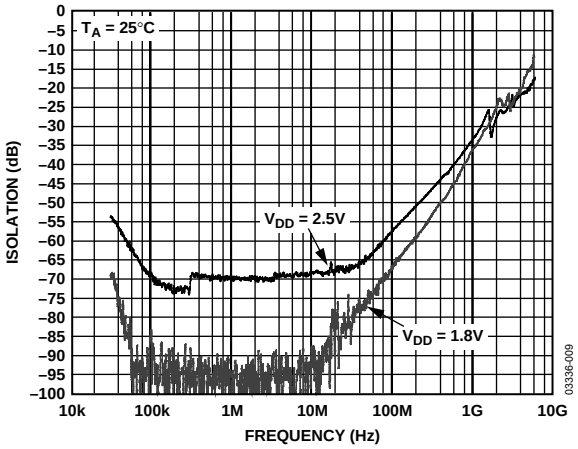

Figure 9. OFF Isolation vs. Frequency over Supplies (S12 and S21)

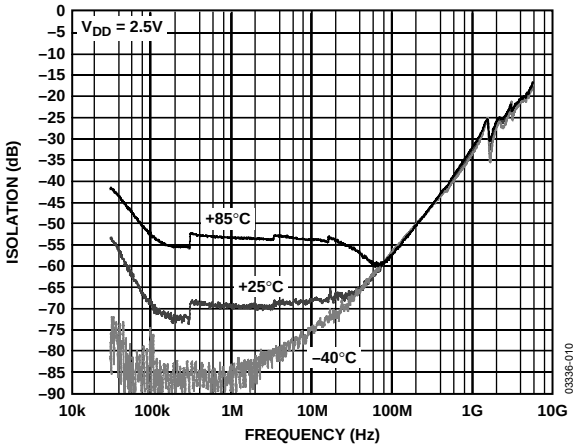

Figure 10. Off Isolation vs. Frequency over Temperature (S12 and S21)

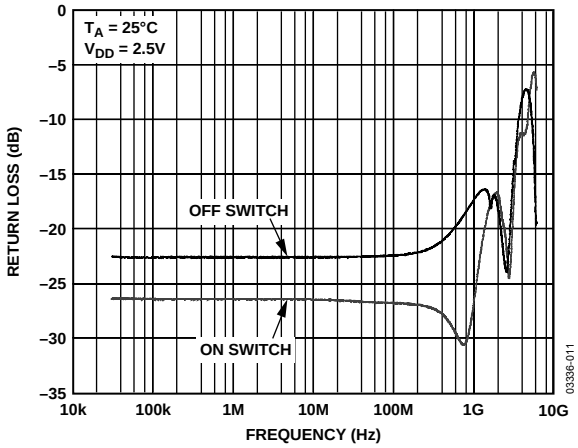

Figure 11. Return Loss vs. Frequency (S11)

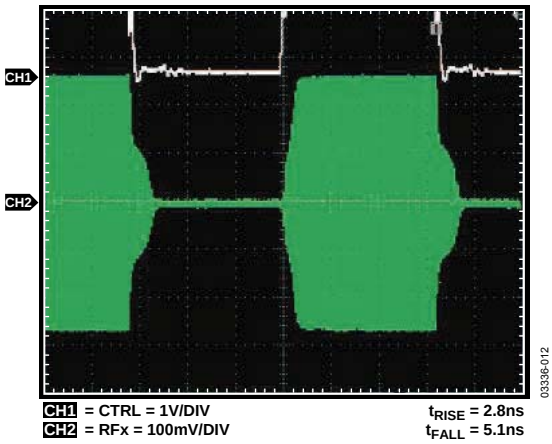

Figure 12. Switch Timing

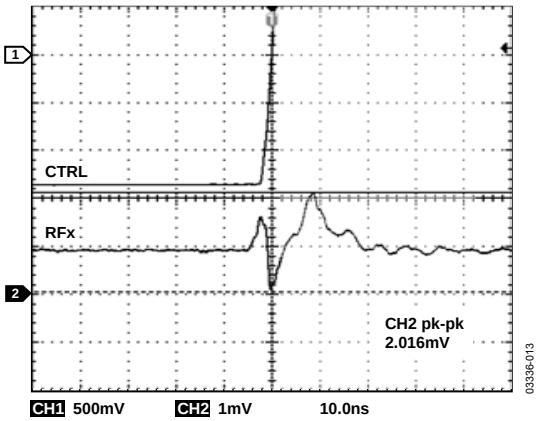

Figure 13. Video Feedthrough

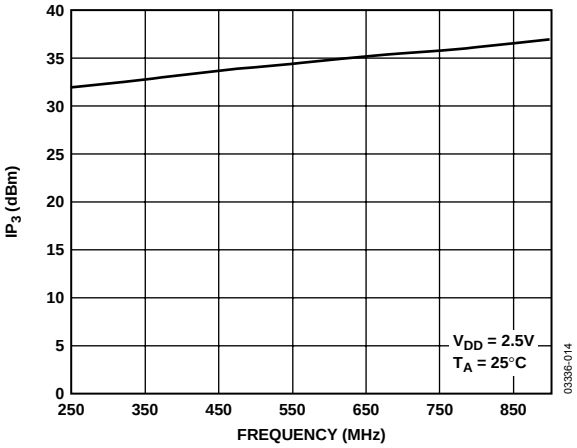

Figure 14. IP_3 vs. Frequency

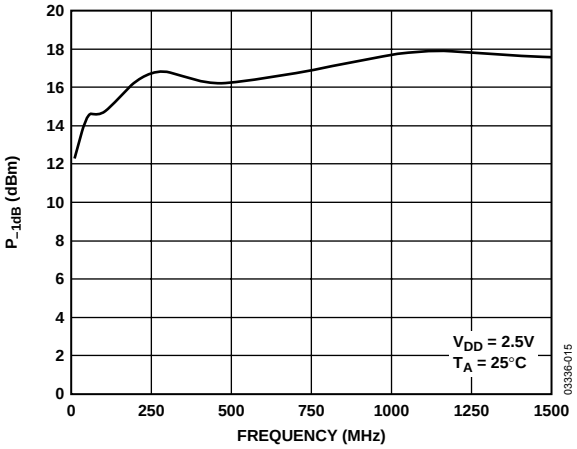

Figure 15. P_{-1dB} vs. Frequency

TERMINOLOGY

V_{DD}
Most positive power supply potential.

I_{DD}
Positive supply current.

GND
Ground (0 V) reference.

CTRL
Logic control input.

V_{INL}
Maximum input voltage for Logic 0.

V_{INH}
Minimum input voltage for Logic 1.

I_{INL} (I_{INH})
Input current of the digital input.

C_{IN}
Digital input capacitance.

t_{ON}
Delay between applying the digital control input and the output switching on.

t_{OFF}
Delay between applying the digital control input and the output switching off.

t_{RISE}
Rise time. Time for the RF signal to rise from 10% to 90% of the on level.

t_{FALL}
Fall time. Time for the RF signal to fall from 90% to 10% of the on level.

Off Isolation
The attenuation between input and output ports of the switch when the switch control voltage is in the off condition.

Insertion Loss
The attenuation between input and output ports of the switch when the switch control voltage is in the on condition.

$P_{-1\ dB}$
1 dB compression point. The RF input power level at which the switch insertion loss increases by 1 dB over its low level value. It is a measure of how much power the on switch can handle before the insertion loss increases by 1 dB.

IP_3
Third-order intermodulation intercept. This is a measure of the power in false tones that occur when closely spaced tones are passed through a switch, whereby the nonlinearity of the switch causes these false tones to be generated.

Return Loss
The amount of reflected power relative to the incident power at a port. Large return loss indicates good matching. By measuring return loss the VSWR can be calculated from conversion charts. voltage standing wave ratio (VSWR) indicates the degree of matching present at a switch RF port.

Video Feedthrough
The spurious signals present at the RF ports of the switch when the control voltage is switched from high to low or low to high without an RF signal present.

TEST CIRCUITS

Similar setups for ADG902.

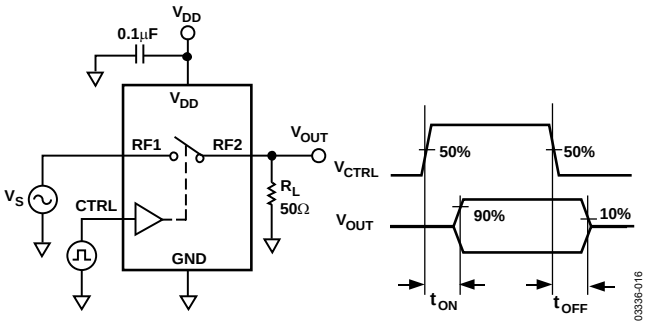

Figure 16. Switching Timing: t_{ON}, t_{OFF}

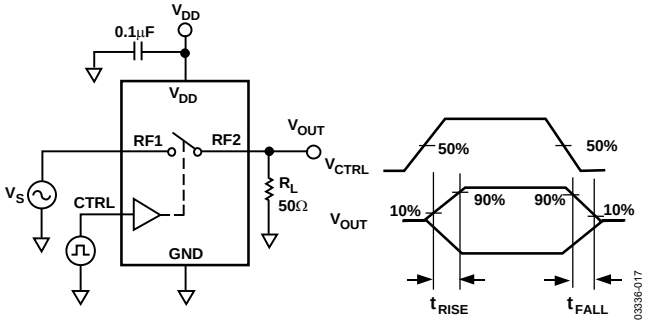

Figure 17. Switch Timing: t_{RISE}, t_{FALL}

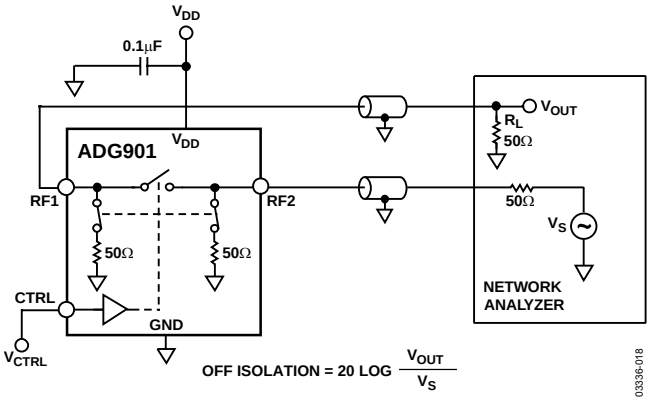

Figure 18. Off Isolation

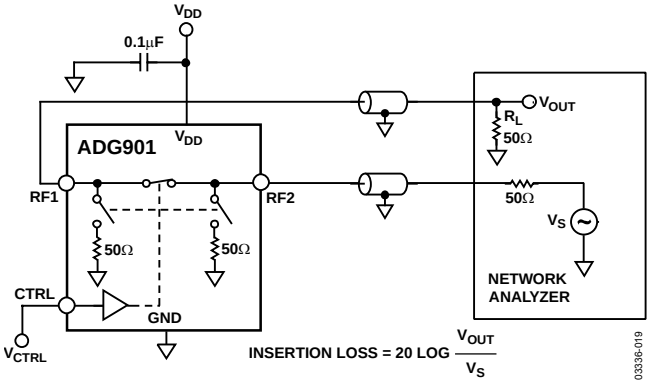

Figure 19. Insertion Loss

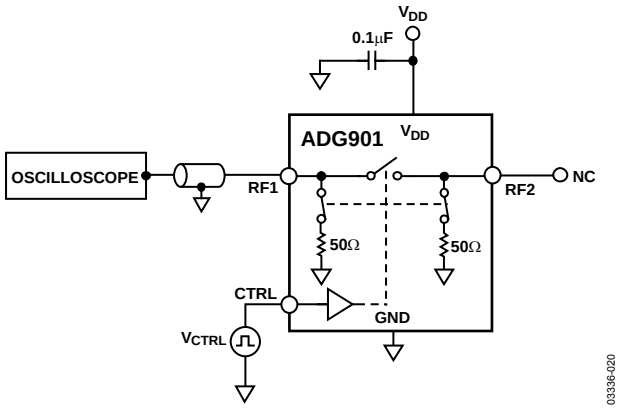

Figure 20. Video Feedthrough

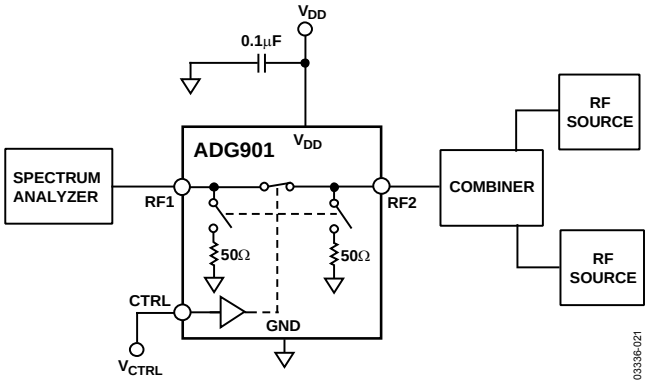

Figure 21. IP_3

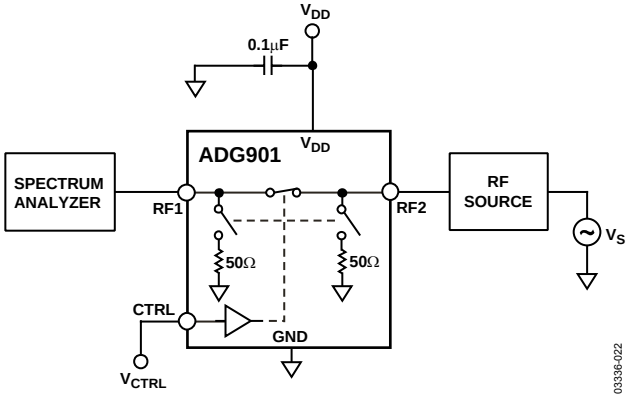

Figure 22. $P_{-1\,dB}$

APPLICATIONS

The ADG901/ADG902 are ideal solutions for low power, high frequency applications. The low insertion loss, high isolation between ports, low distortion, and low current consumption of these parts make them excellent solutions for many high frequency switching applications.

Applications include switching between high frequency filters, ASK generators, and FSK generators.

ABSORPTIVE vs. REFLECTIVE SWITCHES

The ADG901 is an absorptive (matched) switch with 50 Ω terminated shunt legs and the ADG902 is a reflective switch with 0 Ω terminated shunts to ground. The ADG901 absorptive switch has a good VSWR on each port, regardless of the switch mode. An absorptive switch should be used when there is a need for a good VSWR that is looking into the port but not passing the through signal to the common port. The ADG901 is therefore ideal for applications that require minimum reflections back to the RF source. It also ensures that the maximum power is transferred to the load.

The ADG902 reflective switch is suitable for applications where high off port VSWR does not matter and the switch has some other desired performance feature. It can be used in many applications, including high speed filter selection. In most cases, an absorptive switch can be used instead of a reflective switch, but not vice versa.

ADG90x EVALUATION BOARD

The ADG90x evaluation board allows designers to evaluate the high performance wideband switches with a minimum of effort. To prove that these devices meet user requirements, the user requires only a power supply and a network analyzer along with the evaluation board. An application note is available with the evaluation board and provides complete information on operating the evaluation board.

The RF1 port (see Figure 23) is connected through a 50 Ω transmission line to the top left SMA Connector J1. RF2 is connected through a 50 Ω transmission line to the top SMA Connector J2. J3 is connected to GND. A through transmission line connects J4 and J5 and this transmission line is used to estimate the loss of the PCB over the environmental conditions being evaluated.

The board is constructed of a 4-layer, FR4 material with a dielectric constant of 4.3 and an overall thickness of 0.062 inches. Two ground layers with grounded planes provide ground for the RF transmission lines. The transmission lines were designed using a coplanar waveguide with ground plane model using a trace width of 0.052 inches, clearance to ground plane of 0.030 inches, dielectric thickness of 0.029 inches, and a metal thickness of 0.014 inches.

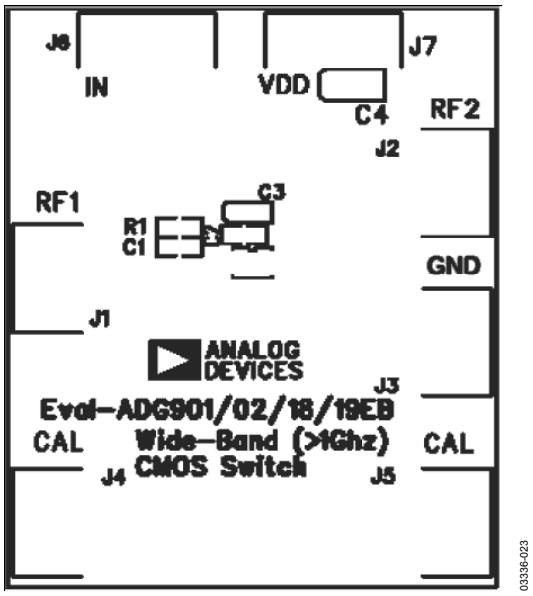

Figure 23. ADG90x Evaluation Board Top View

OUTLINE DIMENSIONS

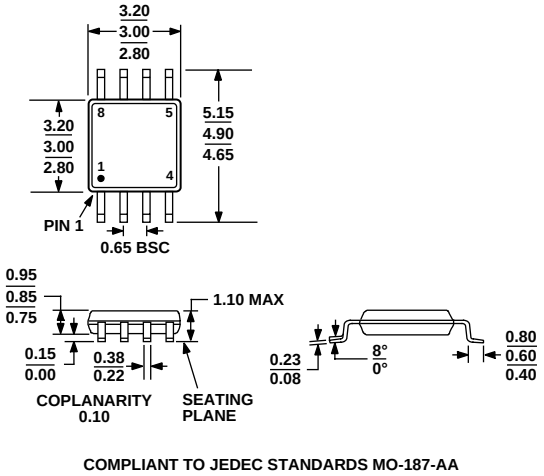

Figure 24. 8-Lead Mini Small Outline Package [MSOP]
(RM-8)
Dimensions shown in millimeters

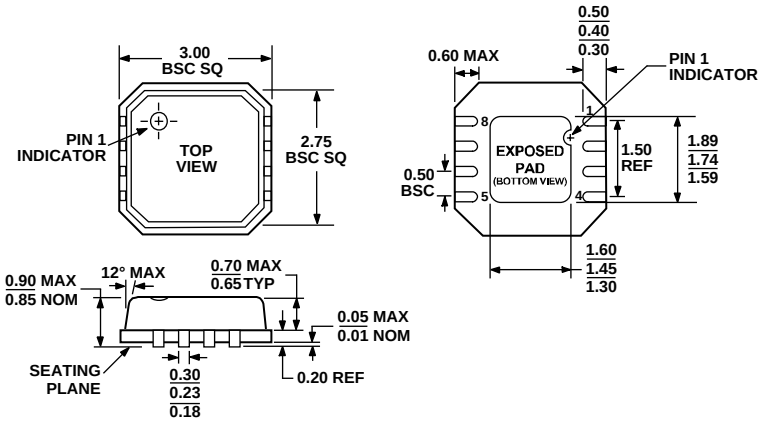

Figure 25. 8-Lead Lead Frame Chip Scale Package [LFCSP]
3 mm × 3 mm Body
(CP-8-2)
Dimensions shown in millimeters

ORDERING GUIDE

Model	Temperature Range	Package Description	Package Option	Branding
ADG901BRM	−40°C to +85°C	8-Lead Mini Small Outline Package [MSOP]	RM-8	W6B
ADG901BRM-500RL7	−40°C to +85°C	8-Lead Mini Small Outline Package [MSOP]	RM-8	W6B
ADG901BRM-REEL7	−40°C to +85°C	8-Lead Mini Small Outline Package [MSOP]	RM-8	W6B
ADG901BRMZ[1]	−40°C to +85°C	8-Lead Mini Small Outline Package [MSOP]	RM-8	S1T
ADG901BRMZ-REEL7[1]	−40°C to +85°C	8-Lead Mini Small Outline Package [MSOP]	RM-8	S1T
ADG901BCP-500RL7	−40°C to +85°C	8-Lead Lead Frame Chip Scale Package [LFCSP]	CP-8-2	W6B
ADG901BCP-REEL7	−40°C to +85°C	8-Lead Lead Frame Chip Scale Package [LFCSP]	CP-8-2	W6B
ADG901BCPZ-REEL7	−40°C to +85°C	8-Lead Lead Frame Chip Scale Package [LFCSP]	CP-8-2	S1T
ADG902BRM	−40°C to +85°C	8-Lead Mini Small Outline Package [MSOP]	RM-8	W7B
ADG902BRM-500RL7	−40°C to +85°C	8-Lead Mini Small Outline Package [MSOP]	RM-8	W7B
ADG902BRM-REEL7	−40°C to +85°C	8-Lead Lead Frame Chip Scale Package [LFCSP]	RM-8	W7B
ADG902BRMZ[1]	−40°C to +85°C	8-Lead Mini Small Outline Package [MSOP]	RM-8	S1V
ADG902BCP-500RL7	−40°C to +85°C	8-Lead Lead Frame Chip Scale Package [LFCSP]	CP-8-2	W7B
ADG902BCP-REEL7	−40°C to +85°C	8-Lead Lead Frame Chip Scale Package [LFCSP]	CP-8-2	W7B
ADG902BCP-REEL7	−40°C to +85°C	8-Lead Lead Frame Chip Scale Package [LFCSP]	CP-8-2	S1V
EVAL-ADG901EB		Evaluation Board		
EVAL-ADG902EB		Evaluation Board		

[1] Z = Pb-free part.

NOTES

NOTES

NOTES

©2005 Analog Devices, Inc. All rights reserved. Trademarks and registered trademarks are the property of their respective owners.
D03336–0–10/05(B)

О компании

ООО "ТрейдЭлектроникс" - это оперативные поставки широкого спектра электронных компонентов отечественного и импортного производства напрямую от производителей и с крупнейших мировых складов. Реализуемая нашей компанией продукция насчитывает более полумиллиона наименований.

Благодаря этому наша компания предлагает к поставке практически не ограниченный ассортимент компонентов как оптовыми, мелкооптовыми партиями, так и в розницу.

Наличие собственной эффективной системы логистики обеспечивает надежную поставку продукции по конкурентным ценам в точно указанные сроки.

Срок поставки со стоков в **Европе и Америке – от 3 до 14 дней.**

Срок поставки из **Азии – от 10 дней.**

Благодаря развитой сети поставщиков, помогаем в поиске и приобретении экзотичных или снятых с производства компонентов.

Предоставляем спец цены на элементы для создания инженерных сэмплов.

Упорный труд, качественный результат дают нам право быть уверенными в себе и надежными для наших клиентов.

Наша компания это:

- Гарантия качества поставляемой продукции
- Широкий ассортимент
- Минимальные сроки поставок
- Техническая поддержка
- Подбор комплектации
- Индивидуальный подход
- Гибкое ценообразование

Наша организация особенно сильна в поставках модулей, микросхем, пассивных компонентов, ксайленсах (XC), EPF, EPM и силовой электроники.

Большой выбор предлагаемой продукции, различные виды оплаты и доставки, позволят Вам сэкономить время и получить максимум выгоды от сотрудничества с нами!

Trade Electronics.ru

гарантия бесперебойности производства и качества выпускаемой продукции

Перечень производителей, продукцию которых мы поставляем на российский рынок

AMD
ANALOG DEVICES
BOURNS
Coilcraft
élantec Semiconductor, Inc.
HARRIS
Infineon
JRC
MICREL
MOTOROLA
nichicon
PHILIPS
ROHM
SGS-THOMSON
Sipex
TAIYO YUDEN
TOKO
ZILOG
Winbond
Allegro
ATMEL
BURR - BROWN
EXAR
HITACHI
intel
Lattice
muRata
OKI
QUALCOMM
SAMSUNG
SHARP
SONY
TDK
TOSHIBA
KYOCERA
ALTERA
AVX
CITILYST
CYPRESS
FAIRCHILD SEMICONDUCTOR
HOLTEK
International IOR Rectifier
LINEAR TECHNOLOGY
MITSUBISHI
National Semiconductor
ON Semiconductor
REALTEK
SANYO
SHINDENGEN
SGS
TECCOR
TUNDRA
XILINX
Amphenol
Bay Linear
CIRRUS LOGIC
DALLAS
FUJITSU
IDT
intersil
MAXIM
molex
NEC
Panasonic
RENESAS
SII
SIEMENS
ST
Texas Instruments
VISHAY
ZETEX SEMICONDUCTORS

Trade Electronics.ru

гарантия бесперебойности производства и качества выпускаемой продукции

С удовольствием будем прорабатывать для Вас поставки всех необходимых компонентов по текущим запросам для скорейшего выявления групп элементов, по которым сотрудничество именно с нашей компанией будет для Вас максимально выгодным!

С уважением,

Менеджер отдела продаж ООО

«Трейд Электроникс»

Шишлаков Евгений

8 (495)668-30-28 доб 169

manager28@tradeelectronics.ru

http://www.tradeelectronics.ru/