International
IOR Rectifier

IRAMX16UP60A

iMOTION™ Series

16A, 600V

Integrated Power Hybrid IC for
Appliance Motor Drive Applications.

Description

International Rectifier's IRAMX16UP60A is an Integrated Power Module developed and optimized for electronic motor control in appliance applications such as washing machines and variable speed compressor drives for in-room air-conditioning systems and commercial refrigerators. Plug N Drive technology offers an extremely compact, high performance AC motor-driver in a single isolated package for a very simple design. An open emitter configuration of the low side IGBT switches offer easy current feedback and overcurrent monitor for high precision and reliable control.

A built-in temperature monitor and over-current protection, along with the short-circuit rated IGBTs and integrated under-voltage lockout function, deliver high level of protection and fail-safe operation.

The integration of the bootstrap diodes for the high-side driver section, and the single polarity power supply required to drive the internal circuitry, simplify the utilization of the module and deliver further cost reduction advantages.

Features

- Integrated Gate Drivers and Bootstrap Diodes.
- Temperature Monitor
- Temperature and Overcurrent shutdown
- Fully Isolated Package.
- Low VCE (on) Non Punch Through IGBT Technology.
- Undervoltage lockout for all channels
- Matched propagation delay for all channels
- Low side IGBT emitter pins for current control
- Schmitt-triggered input logic
- Cross-conduction prevention logic
- Lower di/dt gate driver for better noise immunity
- Motor Power range 0.75~2kW / 85~253 Vac
- Isolation 2000V_{RMS} min

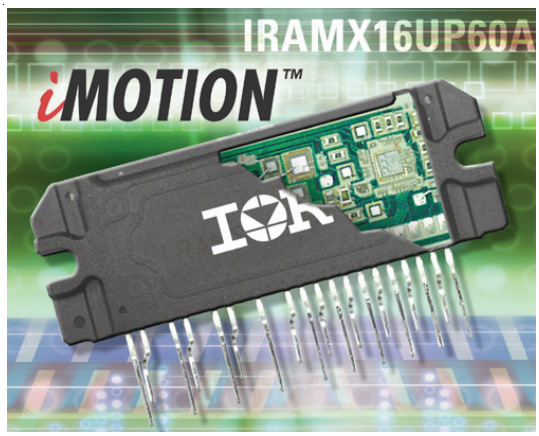

Absolute Maximum Ratings

Parameter	Description	Value	Units
V_{CES} / V_{RRM}	IGBT/Diode Blocking Voltage	600	V
V^+	Positive Bus Input Voltage	450	
I_O @ T_C=25°C	RMS Phase Current (Note 1)	16	A
I_O @ T_C=100°C	RMS Phase Current (Note 1)	8	
I_O	Pulsed RMS Phase Current (Note 2)	30	
F_{PWM}	PWM Carrier Frequency	20	kHz
P_D	Power dissipation per IGBT @ T_C =25°C	31	W
V_{ISO}	Isolation Voltage (1min)	2000	V_{RMS}
T_J (IGBT & Diodes)	Operating Junction temperature Range	-40 to +150	°C
T_J (Driver IC)	Operating Junction temperature Range	-40 to +150	
T	Mounting torque Range (M3 screw)	0.5 to 1.0	Nm

Note 1: Sinusoidal Modulation at V^+=400V, T_J=150°C, F_{PWM}=16kHz, Modulation Depth=0.8, PF=0.6, See Figure 3.
Note 2: t_P<100ms; T_C=25°C; F_{PWM}=16kHz. Limited by $I_{BUS-ITRIP}$, see Table "Inverter Section Electrical Characteristics"

Internal Electrical Schematic - IRAMX16UP60A

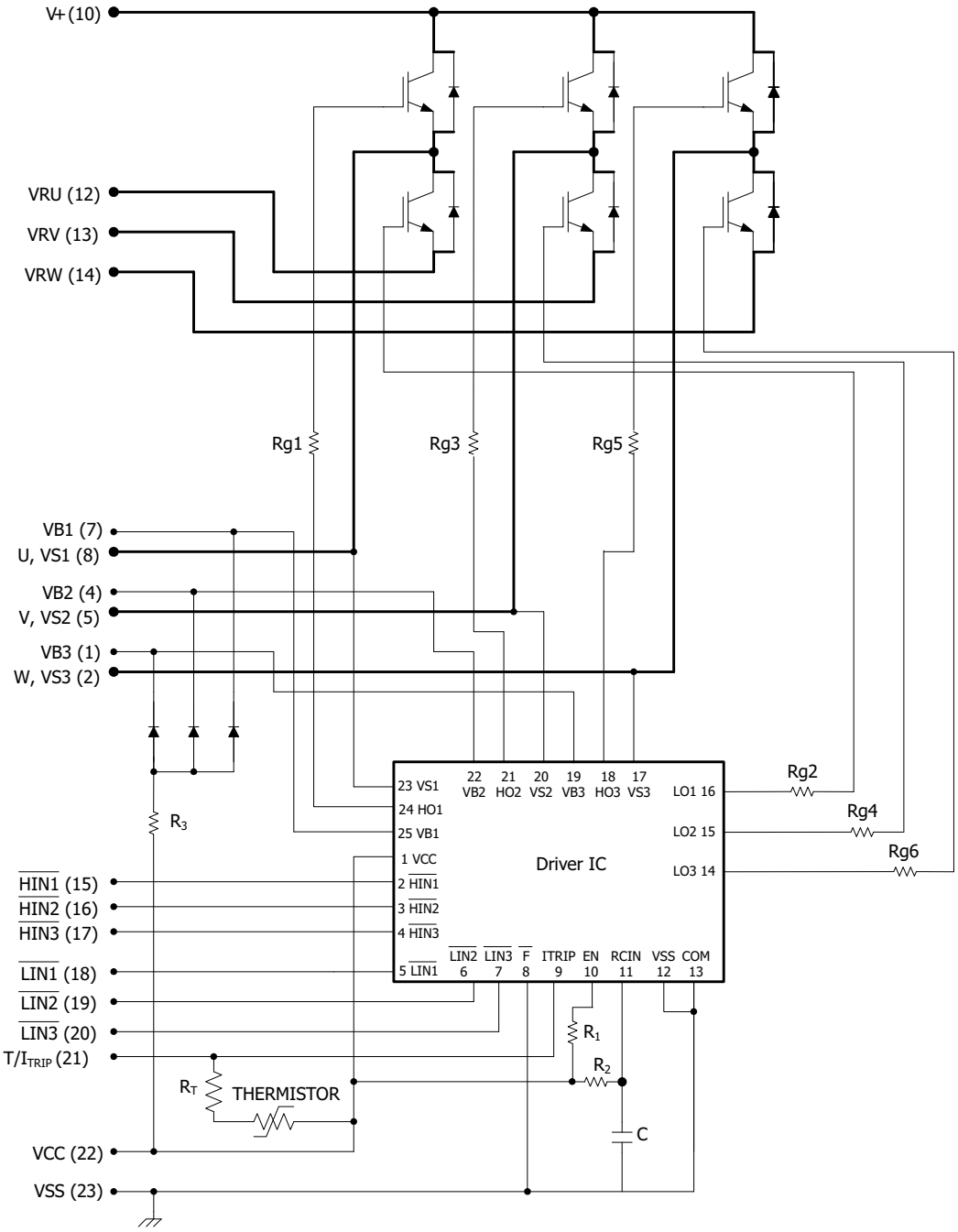

Absolute Maximum Ratings (Continued)

All voltages are absolute referenced to COM

Symbol	Parameter	Min	Max	Units	Conditions
I_{BDF}	Bootstrap Diode Peak Forward Current	---	4.5	A	t_P= 10ms, T_J = 150°C, T_C=100°C
$P_{BR\ Peak}$	Bootstrap Resistor Peak Power (Single Pulse)	---	25.0	W	t_P=100µs, T_C =100°C ESR / ERJ series
$V_{S1,2,3}$	High side floating supply offset voltage	$V_{B1,2,3}$ - 25	$V_{B1,2,3}$ +0.3	V	
$V_{B1,2,3}$	High side floating supply voltage	-0.3	600	V	
V_{CC}	Low Side and logic fixed supply voltage	-0.3	20	V	
V_{IN}, V_{EN}	Input voltage LIN, HIN, EN	-0.3	Lower of (V_{SS}+15V) or V_{CC}+0.3V	V	

Inverter Section Electrical Characteristics @T_J= 25°C

Symbol	Parameter	Min	Typ	Max	Units	Conditions
$V_{(BR)CES}$	Collector-to-Emitter Breakdown Voltage	600	---	---	V	V_{IN}=5V, I_C=250µA
$\Delta V_{(BR)CES}$ / ΔT	Temperature Coeff. Of Breakdown Voltage	---	0.3	---	V/°C	V_{IN}=5V, I_C=1.0mA (25°C - 150°C)
$V_{CE(ON)}$	Collector-to-Emitter Saturation Voltage	---	1.55	1.85	V	I_C=8A, V_{CC}=15V
		---	1.80	2.10		I_C=8A, V_{CC}=15V, T_J=150°C
I_{CES}	Zero Gate Voltage Collector Current	---	5	80	µA	V_{IN}=5V, V^+=600V
		---	165	---		V_{IN}=5V, V^+=600V, T_J=150°C
V_{FM}	Diode Forward Voltage Drop	---	2.0	2.4	V	I_C=8A
		---	1.4	1.9		I_C=8A, T_J=150°C
V_{BDFM}	Bootstrap Diode Forward Voltage Drop	--	--	1.25	V	I_F=1A
		---	---	1.10		I_F=1A, T_J=125°C
R_{BR}	Bootstrap Resistor Value	---	22	---	Ω	T_J=25°C
$\Delta R_{BR}/R_{BR}$	Bootstrap Resistor Tolerance	---	---	±5	%	T_J=25°C

Inverter Section Switching Characteristics @ T_J= 25°C

Symbol	Parameter	Min	Typ	Max	Units	Conditions
E_{ON}	Turn-On Switching Loss	---	315	435	µJ	I_C=8A, V^+=400V V_{CC}=15V, L=2mH Energy losses include "tail" and diode reverse recovery See CT1
E_{OFF}	Turn-Off Switching Loss	---	150	180		
E_{TOT}	Total Switching Loss	---	465	615		
E_{REC}	Diode Reverse Recovery energy	---	30	60		
t_{RR}	Diode Reverse Recovery time	---	70	90	ns	
E_{ON}	Turn-on Switching Loss	---	500	700	µJ	I_C=8A, V^+=400V V_{CC}=15V, L=2mH, T_J=150°C Energy losses include "tail" and diode reverse recovery See CT1
E_{OFF}	Turn-off Switching Loss	---	270	335		
E_{TOT}	Total Switching Loss	---	770	1035		
E_{REC}	Diode Reverse Recovery energy	---	60	100		
t_{RR}	Diode Reverse Recovery time	---	120	150	ns	
Q_G	Turn-On IGBT Gate Charge	---	56	84	nC	I_C=15A, V^+=400V, V_{GE}=15V
RBSOA	Reverse Bias Safe Operating Area	FULL SQUARE				T_J=150°C, I_C=8A, V_P=600V V^+= 450V V_{CC}=+15V to 0V See CT3
SCSOA	Short Circuit Safe Operating Area	10	---	---	µs	T_J=150°C, V_P=600V, V^+= 360V, V_{CC}=+15V to 0V See CT2
I_{CSC}	Short Circuit Collector Current	---	140	---	A	T_J=150°C, V_P=600V, t_{SC}<10µs V^+= 360V, V_{GE}=15V V_{CC}=+15V to 0V See CT2

Recommended Operating Conditions Driver Function

The Input/Output logic timing diagram is shown in Figure 1. For proper operation the device should be used within the recommende conditions. All voltages are absolute referenced to COM. The V_S offset is tested with all supplies biased at 15V differential (Note 3)

Symbol	Definition	Min	Max	Units
$V_{B1,2,3}$	High side floating supply voltage	V_S+12	V_S+20	V
$V_{S1,2,3}$	High side floating supply offset voltage	Note 4	450	
V_{CC}	Low side and logic fixed supply voltage	12	20	V
$V_{T/ITRIP}$	T/I_{TRIP} input voltage	V_{SS}	V_{SS}+5	
V_{IN}	Logic input voltage LIN, HIN	V_{SS}	V_{SS}+5	V

Note 3: For more details, see IR21365 data sheet

Note 4: Logic operational for V_s from COM-5V to COM+600V. Logic state held for V_s from COM-5V to COM-V_{BS}. (please refer to DT97-3 for more details)

Static Electrical Characteristics Driver Function

V_{BIAS} (V_{CC}, $V_{BS1,2,3}$)=15V, unless otherwise specified. The V_{IN} and I_{IN} parameters are referenced to COM and are applicable to all six channels. (Note 3)

Symbol	Definition	Min	Typ	Max	Units
V_{IH}	Logic "0" input voltage	3.0	---	---	V
V_{IL}	Logic "1" input voltage	---	---	0.8	V
V_{CCUV+}, V_{BSUV+}	V_{CC} and V_{BS} supply undervoltage Positive going threshold	10.6	11.1	11.6	V
V_{CCUV-}, V_{BSUV-}	V_{CC} and V_{BS} supply undervoltage Negative going threshold	10.4	10.9	11.4	V
V_{CCUVH}, V_{BSUVH}	V_{CC} and V_{BS} supply undervoltage lock-out hysteresis	---	0.2	---	V
$V_{IN, Clamp}$	Input Clamp Voltage (HIN, LIN, T/I_{TRIP}) I_{IN}=10µA	4.9	5.2	5.5	V
I_{QBS}	Quiescent V_{BS} supply current V_{IN}=0V	---	---	165	µA
I_{QCC}	Quiescent V_{CC} supply current V_{IN}=0V	---	---	3.35	mA
I_{LK}	Offset Supply Leakage Current	---	---	60	µA
I_{IN+}	Input bias current V_{IN}=5V	---	200	300	µA
I_{IN-}	Input bias current V_{IN}=0V	---	100	220	µA
T/I_{TRIP+}	T/I_{TRIP} bias current V_{ITRIP}=5V	---	30	100	µA
T/I_{TRIP-}	T/I_{TRIP} bias current V_{ITRIP}=0V	---	0	1	µA
$V(T/I_{TRIP})$	T/I_{TRIP} threshold Voltage	3.85	4.30	4.75	V
$V(T/I_{TRIP},HYS)$	T/I_{TRIP} Input Hysteresis	---	0.07	---	V

Dynamic Electrical Characteristics

Driver only timing unless otherwise specified.

Symbol	Parameter	Min	Typ	Max	Units	Conditions
T_{ON}	Input to Output propagation turn-on delay time (see fig.11)	---	590	---	ns	V_{CC}=V_{BS}= 15V, I_C=8A, V^+=400V
T_{OFF}	Input to Output propagation turn-off delay time (see fig. 11)	---	660	---	ns	
T_{FLIN}	Input Filter time (HIN, LIN)	100	200	---	ns	V_{IN}=0 & V_{IN}=5V
$T_{BLT-Trip}$	I_{TRIP} Blancking Time	100	150		ns	V_{IN}=0 & V_{IN}=5V
D_T	Dead Time (V_{BS}=V_{DD}=15V)	220	290	360	ns	V_{BS}=V_{CC}=15V
M_T	Matching Propagation Delay Time (On & Off)	---	40	75	ns	V_{CC}= V_{BS}= 15V, external dead time> 400ns
T_{ITrip}	I_{Trip} to six switch to turn-off propagation delay (see fig. 2)	---	---	1.75	µs	V_{CC}=V_{BS}= 15V, I_C=8A, V^+=400V
$T_{FLT-CLR}$	Post I_{Trip} to six switch to turn-off clear time (see fig. 2)	---	7.7	---	ms	T_C = 25°C
		---	6.7	---		T_C = 100°C

Thermal and Mechanical Characteristics

Symbol	Parameter	Min	Typ	Max	Units	Conditions
$R_{th(J-C)}$	Thermal resistance, per IGBT	---	3.5	4.0	°C/W	Flat, greased surface. Heatsink compound thermal conductivity 1W/mK
$R_{th(J-C)}$	Thermal resistance, per Diode	---	5.0	5.5		
$R_{th(C-S)}$	Thermal resistance, C-S	---	0.1	---		
C_D	Creepage Distance	3.2	---	---	mm	See outline Drawings

Internal NTC - Thermistor Characteristics

Parameter	Definition	Min	Typ	Max	Units	Conditions
R_{25}	Resistance	97	100	103	kΩ	T_C = 25°C
R_{125}	Resistance	2.25	2.52	2.80	kΩ	T_C = 125°C
B	B-constant (25-50°C)	4165	4250	4335	k	$R_2 = R_1 e^{[B(1/T2 - 1/T1)]}$
Temperature Range		-40		125	°C	
Typ. Dissipation constant			1		mW/°C	T_C = 25°C

Input-Output Logic Level Table

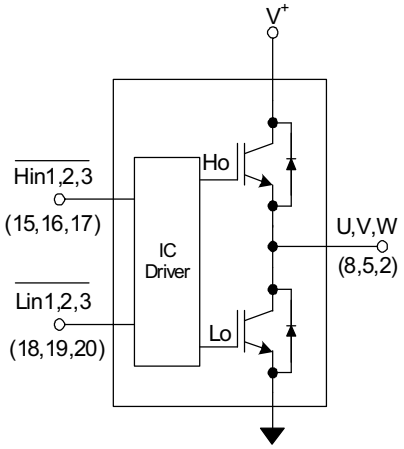

FLT- EN	I_{TRIP}	$\overline{HIN1,2,3}$	$\overline{LIN1,2,3}$	U,V,W
1	0	0	1	V^+
1	0	1	0	0
1	0	1	1	Off
1	1	X	X	Off
0	X	X	X	Off

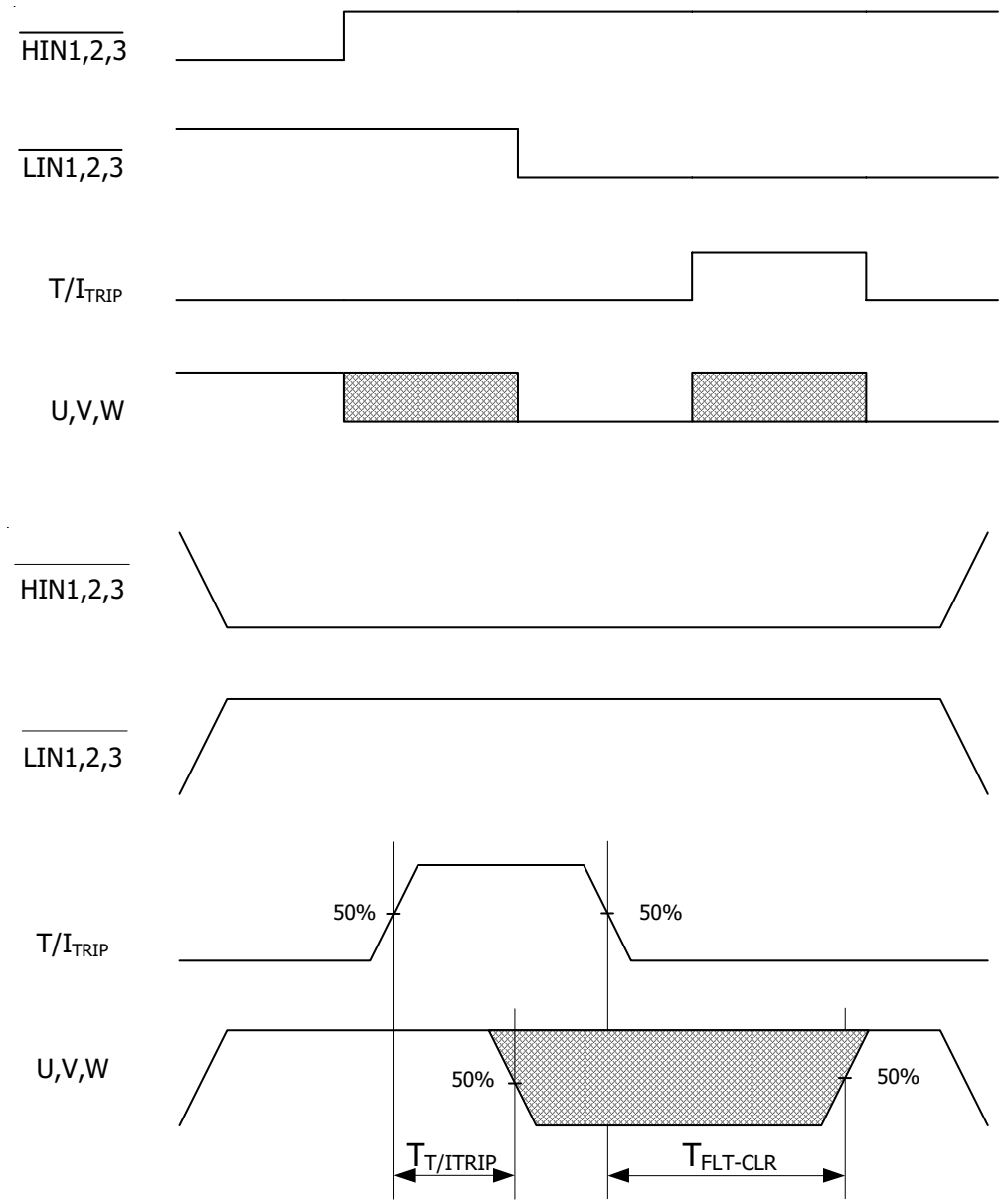

Note 5: The shaded area indicates that both high-side and low-side switches are off and therefore the half-bridge output voltage would be determined by the direction of current flow in the load.

Module Pin-Out Description

Pin	Name	Description
1	V_{B3}	High Side Floating Supply Voltage 3
2	U, V_{S3}	Output 3 - High Side Floating Supply Offset Voltage
3	NA	none
4	V_{B2}	High Side Floating Supply voltage 2
5	V,V_{S2}	Output 2 - High Side Floating Supply Offset Voltage
6	NA	none
7	V_{B1}	High Side Floating Supply voltage 1
8	W,V_{S1}	Output 1 - High Side Floating Supply Offset Voltage
9	NA	none
10	V^+	Positive Bus Input Voltage
11	NA	none
12	L_{E1}	Low Side Emitter Connection - Phase 1
13	L_{E2}	Low Side Emitter Connection - Phase 2
14	L_{E3}	Low Side Emitter Connection - Phase 3
15	$\overline{H_{IN1}}$	Logic Input High Side Gate Driver - Phase 1
16	$\overline{H_{NI2}}$	Logic Input High Side Gate Driver - Phase 2
17	$\overline{H_{IN3}}$	Logic Input High Side Gate Driver - Phase 3
18	$\overline{L_{IN1}}$	Logic Input Low Side Gate Driver - Phase 1
19	$\overline{L_{IN2}}$	Logic Input Low Side Gate Driver - Phase 2
20	$\overline{L_{IN3}}$	Logic Input Low Side Gate Driver - Phase 3
21	T/I_{TRIP}	Temperature Monitor and Shut-down Pin
22	V_{CC}	+15V Main Supply
23	V_{SS}	Negative Main Supply

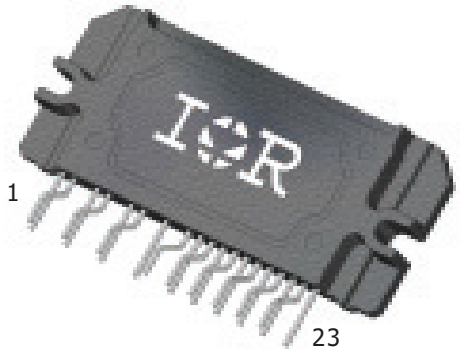

Typical Application Connection IRAMX16UP60A

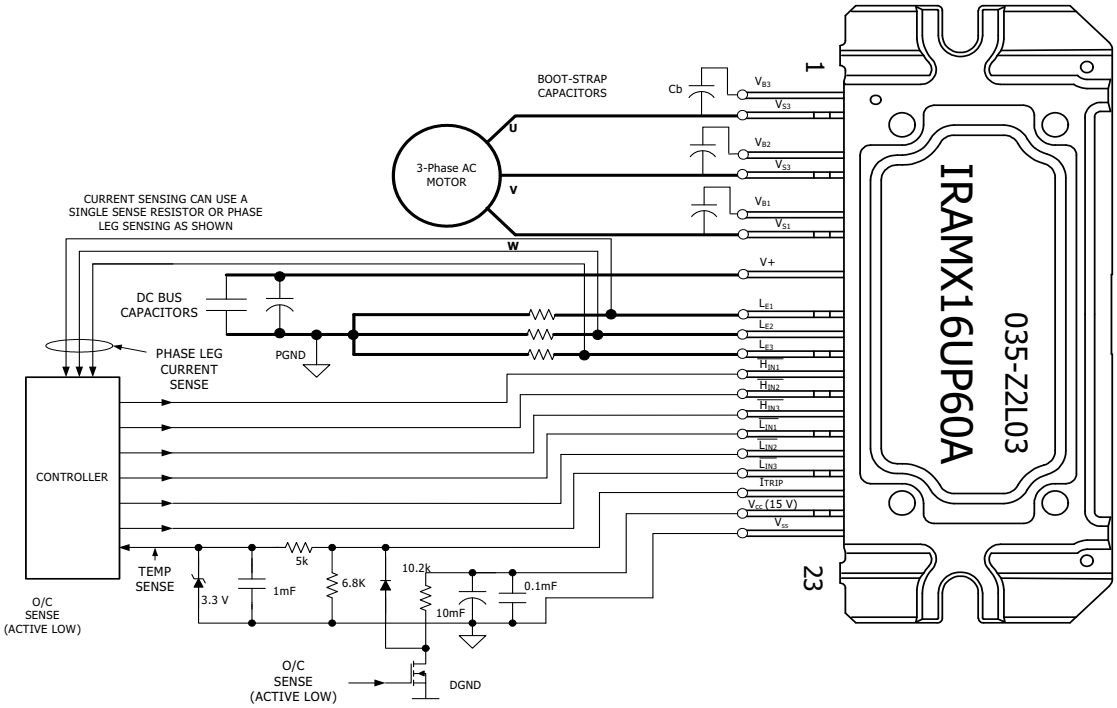

1. Electrolytic bus capacitors should be mounted as close to the module bus terminals as possible to reduce ringing and EMI problems. Additional high frequency ceramic capacitor mounted close to the module pins will further improve performance.

2. In order to provide good decoupling between V_{CC}-V_{SS} and $V_{B1,2,3}$-$V_{S1,2,3}$ terminals, the capacitors shown connected between these terminals should be located very close to the module pins. Additional high frequency capacitors, typically 0.1µF, are strongly recommended.

3. Value of the boot-strap capacitors depends upon the switching frequency. Their selection should be made based on IR design tip DN 98-2a, application note AN-1044 or Figure 9. Bootstrap capacitor value must be selected to limit the power dissipation of the internal resistor in series with the V_{CC}. (see maximum ratings Table on page 3).

4. After approx. 8ms the FAULT is reset. (see Dynamic Characteristics Table on page 5).

5. PWM generator must be disabled within Fault duration to garantee shutdown of the system, overcurrent condition must be cleared before resuming operation.

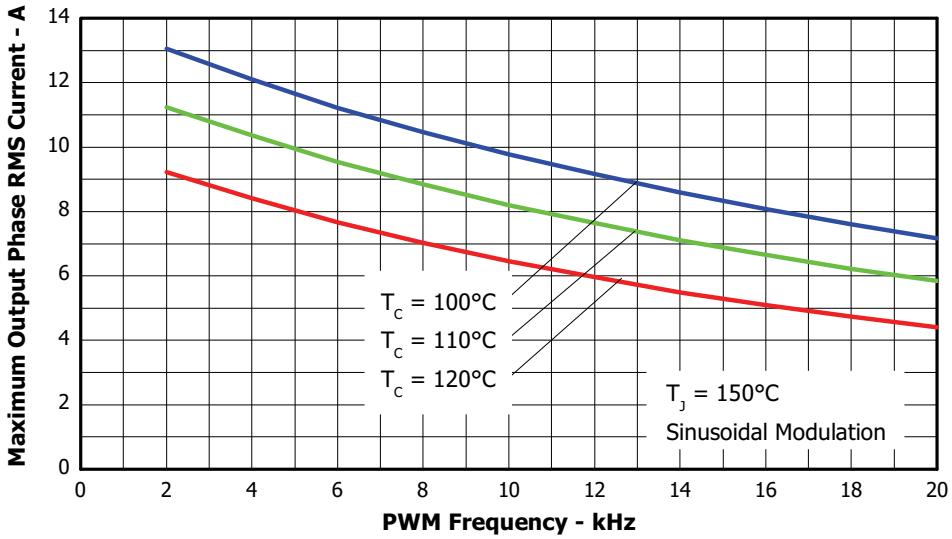

Figure 3. Maximum Sinusoidal Phase Current vs. PWM Switching Frequency
V^+=400V , T_J=150°C, Modulation Depth=0.8, PF=0.6

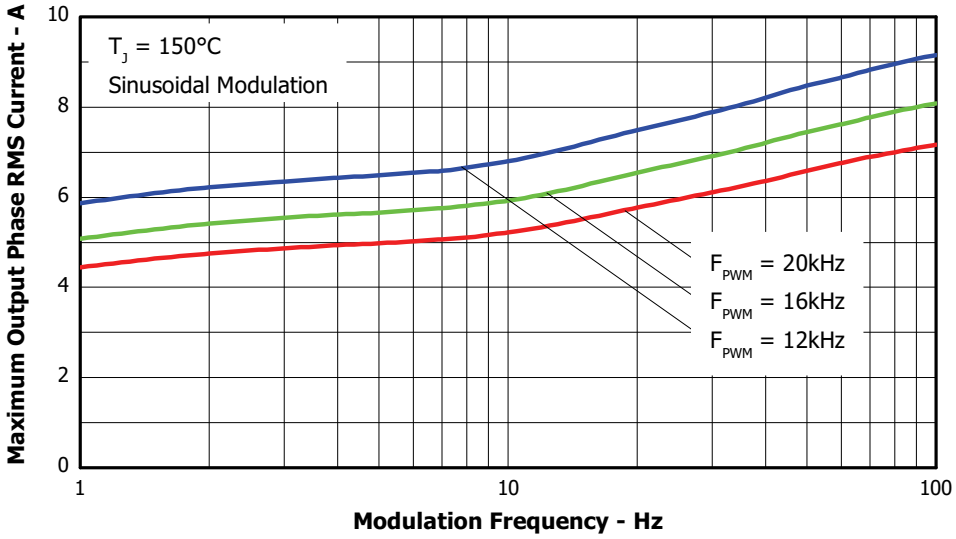

Figure 4. Maximum Sinusoidal Phase Current vs. Modulation Frequency
V^+=400V, T_J=150°C, T_C=100°C, Modulation Depth=0.8, PF=0.6

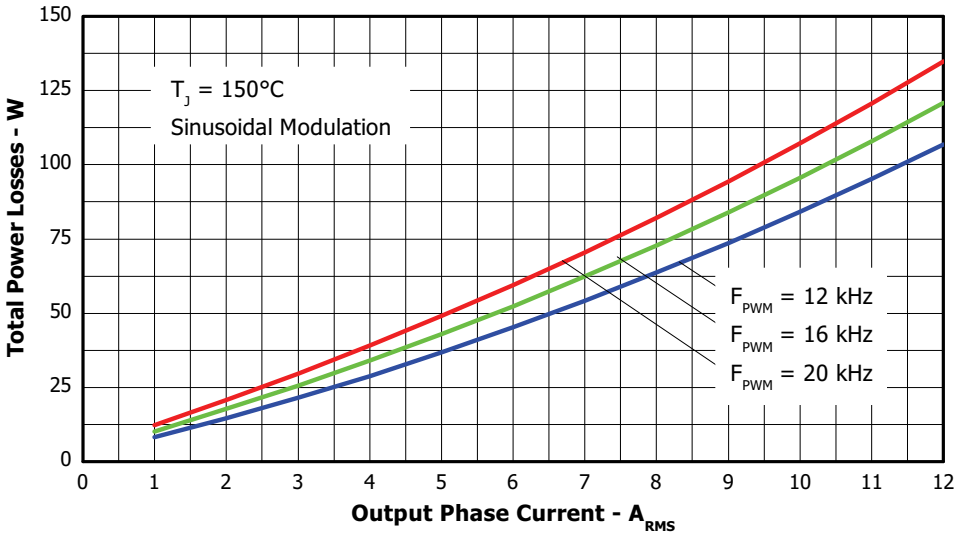

Figure 5. Total Power Losses vs. PWM Switching Frequency, Sinusoidal modulation
V^{+}=400V , T_J=150°C, Modulation Depth=0.8, PF=0.6

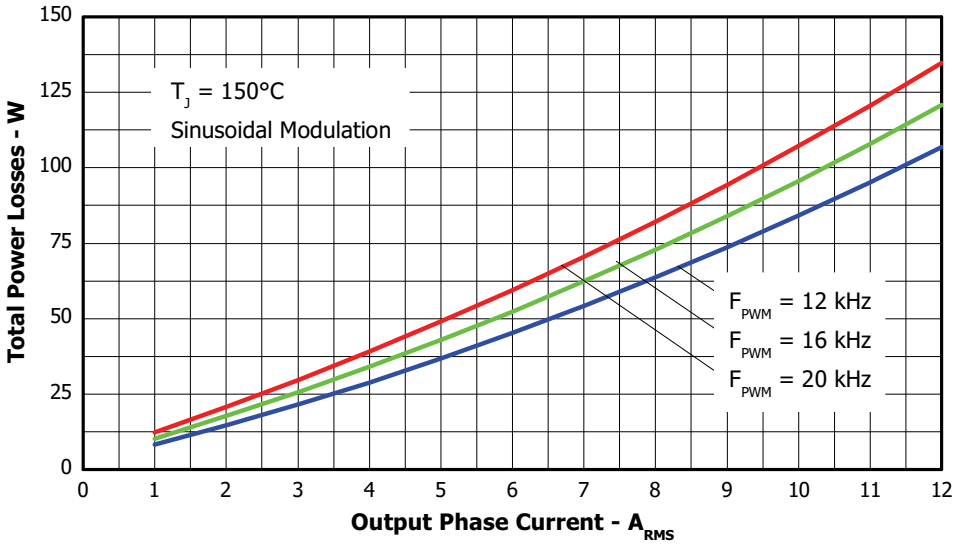

Figure 6. Total Power Losses vs. Output Phase Current, Sinusoidal modulation
V_{BUS}=400V , T_J=150°C, Modulation Depth=0.8, PF=0.6

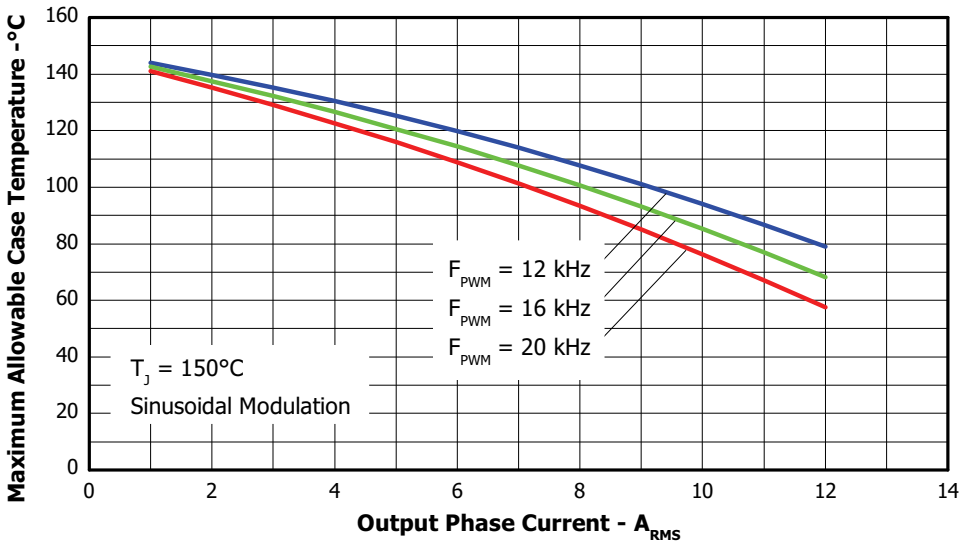

Figure 7. Maximum Allowable Case temperature vs. Output RMS Current per Phase

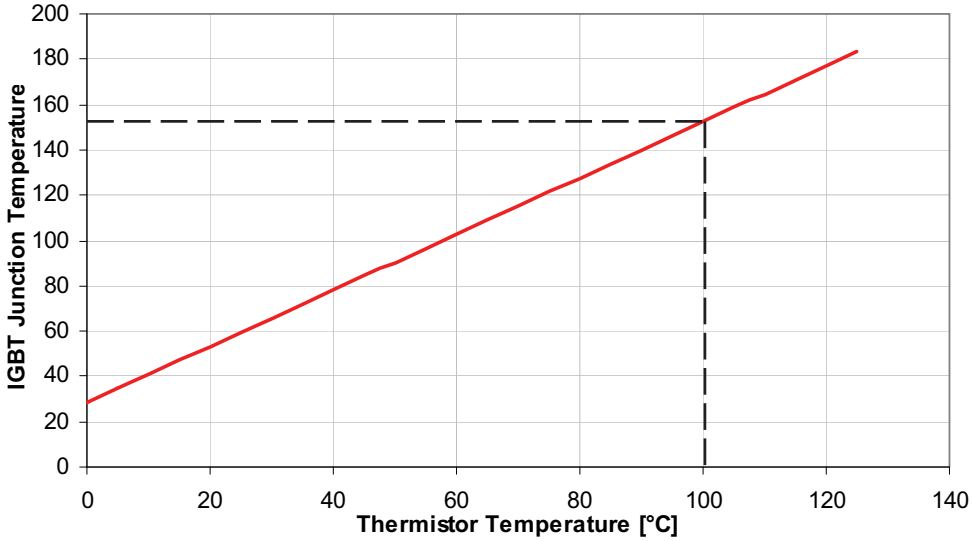

Figure 8. Estimated Maximum IGBT Junction Temperature vs. Thermistor Temperature

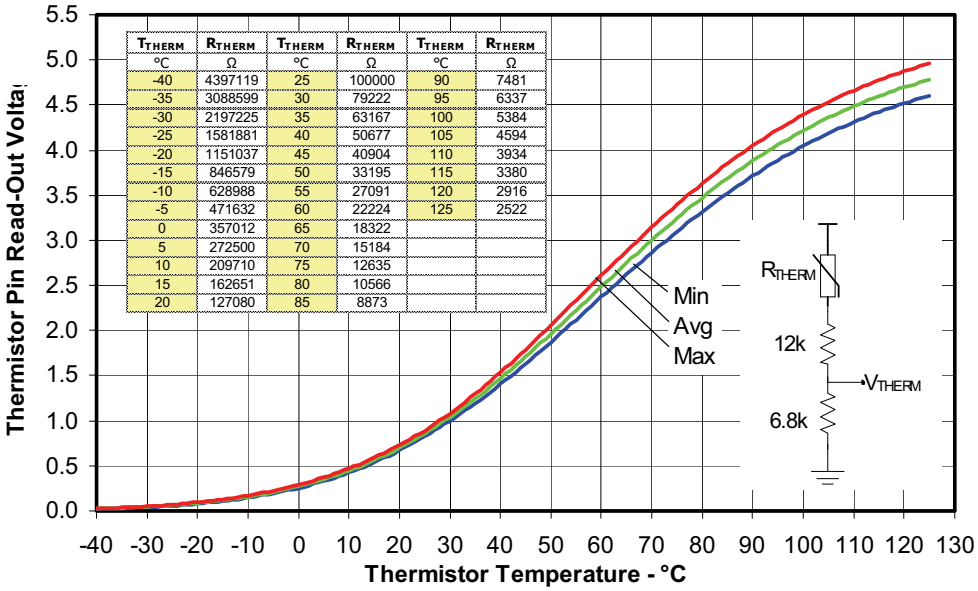

T_{THERM} °C	R_{THERM} Ω	T_{THERM} °C	R_{THERM} Ω	T_{THERM} °C	R_{THERM} Ω
-40	4397119	25	100000	90	7481
-35	3088599	30	79222	95	6337
-30	2197225	35	63167	100	5384
-25	1581881	40	50677	105	4594
-20	1151037	45	40904	110	3934
-15	846579	50	33195	115	3380
-10	628988	55	27091	120	2916
-5	471632	60	22224	125	2522
0	357012	65	18322		
5	272500	70	15184		
10	209710	75	12635		
15	162651	80	10566		
20	127080	85	8873		

Figure 9. Thermistor Readout vs. Temperature (6.8kohm, 1% pull down resistor) and Nominal Thermistor Resistance values vs. Temperature Table.

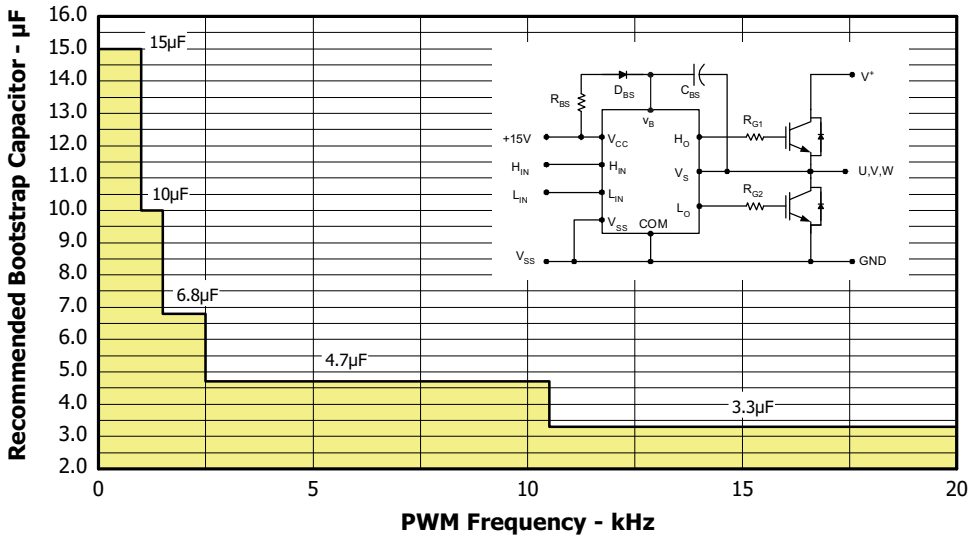

Figure 10. Recommended Bootstrap Capacitor Value vs. Switching Frequency

Figure 11. Switching Parameter Definitions

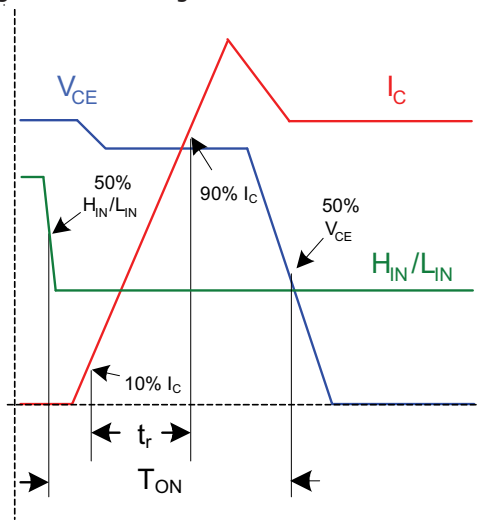

Figure 11a. Input to Output Propagation turn-on Delay Time

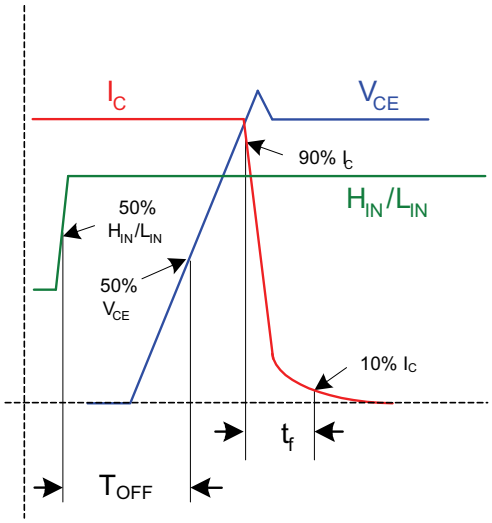

Figure 11b. Input to Output Propagation turn-off Delay Time

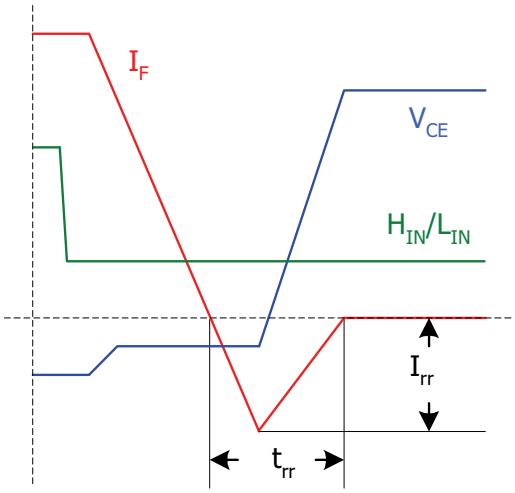

Figure 11c. Diode Reverse Recovery

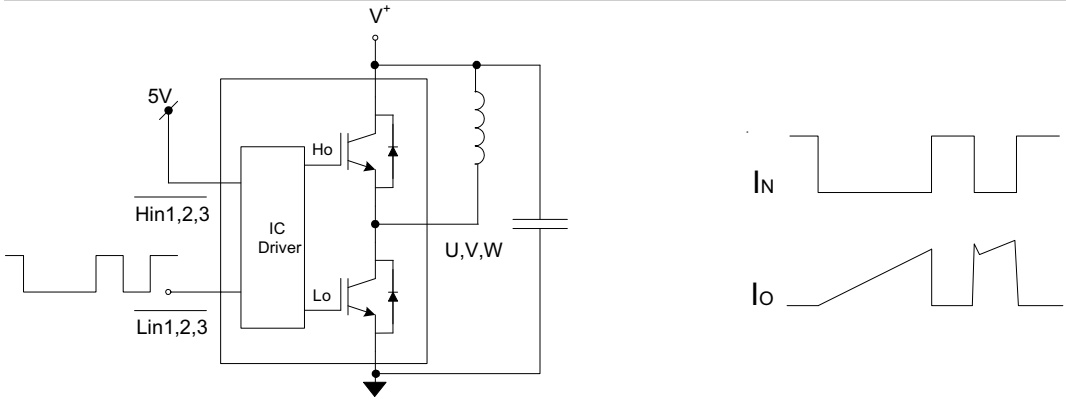

Figure CT1. Switching Loss Circuit

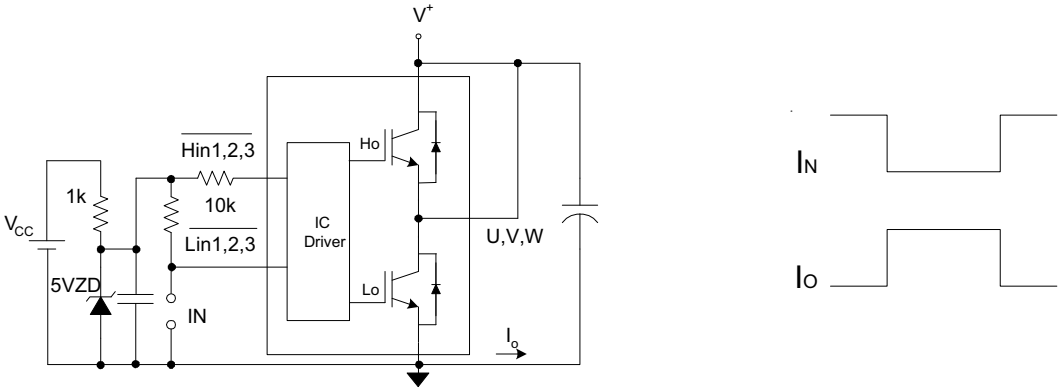

Figure CT2. S.C.SOA Circuit

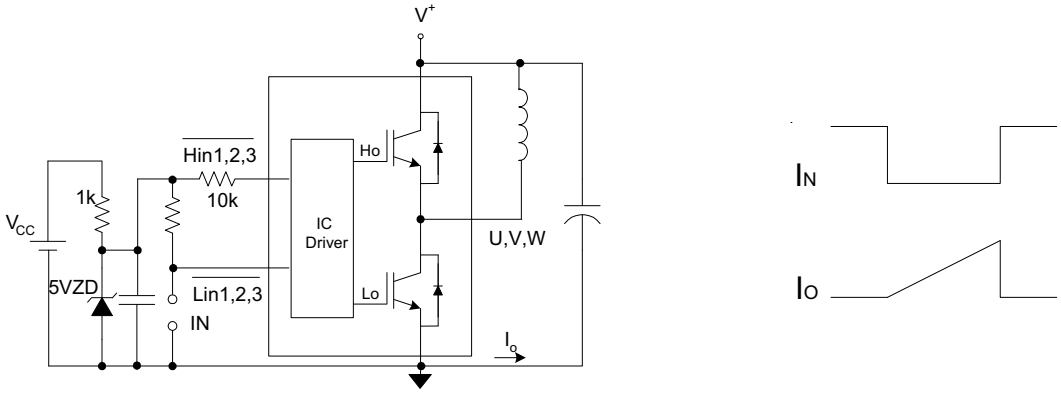

Figure CT3. R.B.SOA Circuit

Package Outline IRAMX16UP60A

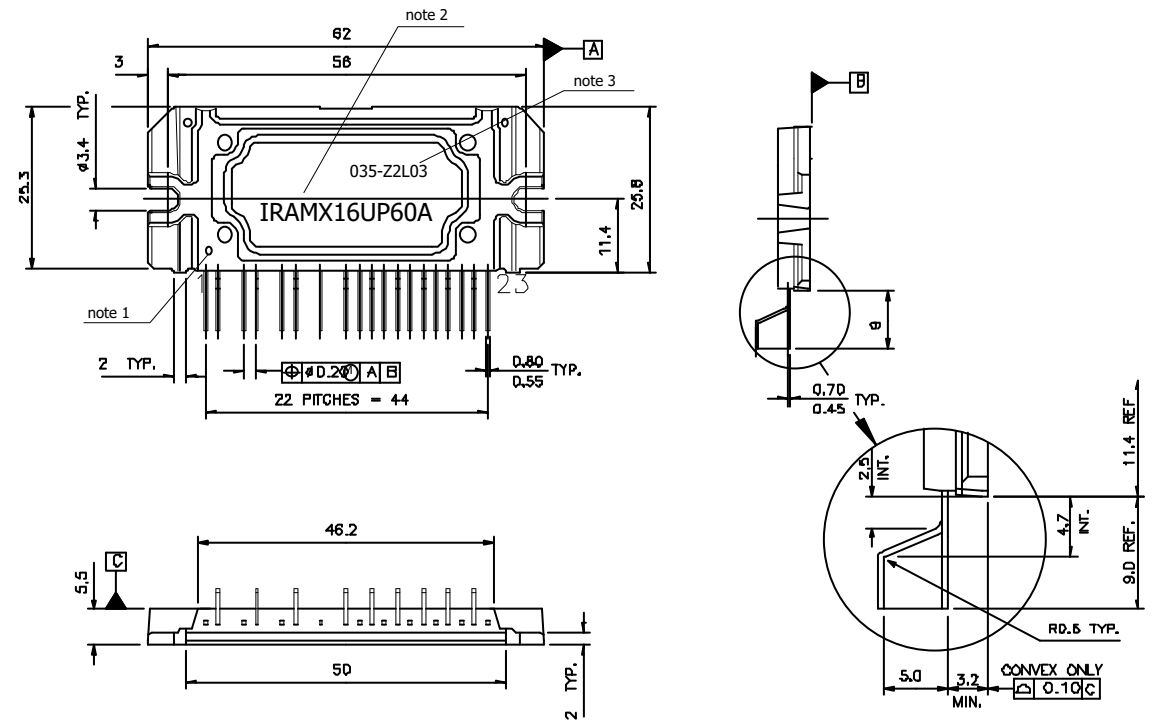

Notes:

Dimensions in mm

1- Marking for pin 1 identification

2- Product Part Number

3- Lot and Date code marking

4- Convex only 0.15mm typical

5- Tollerances ±0.5mm, unless otherwise stated

For mounting instruction see AN-1049

Package Outline IRAMX16UP60A-2

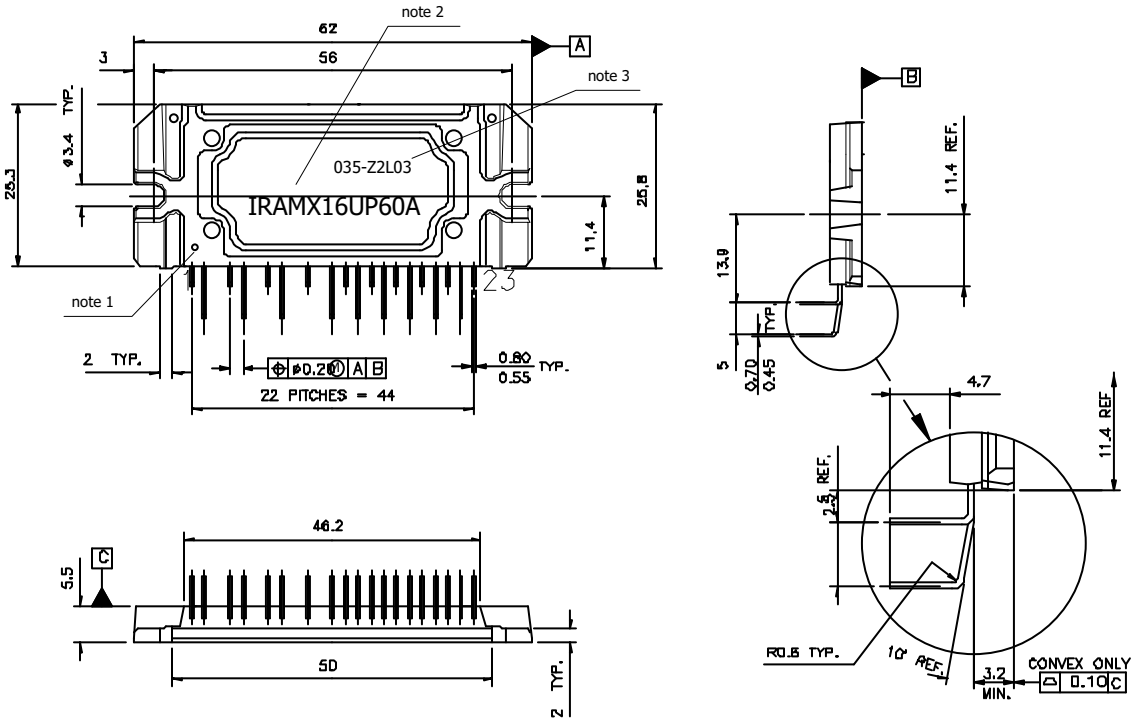

Notes:

Dimensions in mm

1- Marking for pin 1 identification

2- Product Part Number

3- Lot and Date code marking

4- Convex only 0.15mm typical

5- Tollerances ±0.5mm, unless otherwise stated

For mounting instruction see AN-1049

International
IOR Rectifier

Data and Specifications are subject to change without notice

IR WORLD HEADQUARTERS: 233 Kansas St., El Segundo, California 90245, USA Tel: (310) 252-7105
TAC Fax: (310) 252-7903
Visit us at www.irf.com for sales contact information
07/05

О компании

ООО "ТрейдЭлектроникс" - это оперативные поставки широкого спектра электронных компонентов отечественного и импортного производства напрямую от производителей и с крупнейших мировых складов. Реализуемая нашей компанией продукция насчитывает более полумиллиона наименований.

Благодаря этому наша компания предлагает к поставке практически не ограниченный ассортимент компонентов как оптовыми, мелкооптовыми партиями, так и в розницу.

Наличие собственной эффективной системы логистики обеспечивает надежную поставку продукции по конкурентным ценам в точно указанные сроки.

Срок поставки со стоков в **Европе и Америке – от 3 до 14 дней.**

Срок поставки из **Азии – от 10 дней.**

Благодаря развитой сети поставщиков, помогаем в поиске и приобретении экзотичных или снятых с производства компонентов.

Предоставляем спец цены на элементы для создания инженерных сэмплов.

Упорный труд, качественный результат дают нам право быть уверенными в себе и надежными для наших клиентов.

Наша компания это:

- Гарантия качества поставляемой продукции
- Широкий ассортимент
- Минимальные сроки поставок
- Техническая поддержка
- Подбор комплектации
- Индивидуальный подход
- Гибкое ценообразование

Наша организация особенно сильна в поставках модулей, микросхем, пассивных компонентов, ксайленсах (XC), EPF, EPM и силовой электроники.

Большой выбор предлагаемой продукции, различные виды оплаты и доставки, позволят Вам сэкономить время и получить максимум выгоды от сотрудничества с нами!

Trade Electronics.ru

гарантия бесперебойности производства и качества выпускаемой продукции

Перечень производителей, продукцию которых мы поставляем на российский рынок

AMD
ANALOG DEVICES
BOURNS
Coilcraft
élantec Semiconductor, Inc.
HARRIS
Infineon
JRC
MICREL
MOTOROLA
nichicon
PHILIPS
ROHM
SGS-THOMSON
Sipex
TAIYO YUDEN
TOKO
ZILOG
Winbond
Allegro
ATMEL
BURR - BROWN
EXAR
HITACHI
intel
Lattice
muRata
OKI
QUALCOMM
SAMSUNG
SHARP
SONY
TDK
TOSHIBA
KYOCERA
ALTERA
AVX
CITILYST
CYPRESS
FAIRCHILD SEMICONDUCTOR
HOLTEK
International IOR Rectifier
LINEAR TECHNOLOGY
MITSUBISHI
National Semiconductor
ON Semiconductor
REALTEK
SANYO
SHINDENGEN
SGS
TECCOR
TUNDRA
XILINX
Amphenol
Bay Linear
CIRRUS LOGIC
DALLAS
FUJITSU
IDT
intersil
MAXIM
molex
NEC
Panasonic
RENESAS
SII
SIEMENS
ST
Texas Instruments
VISHAY
ZETEX SEMICONDUCTORS

Trade Electronics.ru

гарантия бесперебойности производства и качества выпускаемой продукции

С удовольствием будем прорабатывать для Вас поставки всех необходимых компонентов по текущим запросам для скорейшего выявления групп элементов, по которым сотрудничество именно с нашей компанией будет для Вас максимально выгодным!

С уважением,

Менеджер отдела продаж ООО

«Трейд Электроникс»

Шишлаков Евгений

8 (495)668-30-28 доб 169

manager28@tradeelectronics.ru

http://www.tradeelectronics.ru/