FAIRCHILD SEMICONDUCTOR®

October 2003
Revised April 2005

FIN3385 • FIN3383 • FIN3384 • FIN3386
Low Voltage 28-Bit Flat Panel Display Link Serializers/Deserializers

General Description

The FIN3385 and FIN3383 transform 28 bit wide parallel LVTTL (Low Voltage TTL) data into 4 serial LVDS (Low Voltage Differential Signaling) data streams. A phase-locked transmit clock is transmitted in parallel with the data stream over a separate LVDS link. Every cycle of transmit clock 28 bits of input LVTTL data are sampled and transmitted.

The FIN3386 and FIN3384 receive and convert the 4/3 serial LVDS data streams back into 28/21 bits of LVTTL data. Refer to Table 1 for a matrix summary of the Serializers and Deserializers available. For the FIN3385, at a transmit clock frequency of 85MHz, 28 bits of LVTTL data are transmitted at a rate of 595Mbps per LVDS channel.

These chipsets are an ideal solution to solve EMI and cable size problems associated with wide and high-speed TTL interfaces.

Features

- Low power consumption
- 20 MHz to 85 MHz shift clock support
- ±1V common-mode range around 1.2V
- Narrow bus reduces cable size and cost
- High throughput (up to 2.38 Gbps throughput)
- Internal PLL with no external component
- Compatible with TIA/EIA-644 specification
- Devices are offered 56-lead TSSOP packages

Ordering Code:

Order Number	Package Number	Package Description
FIN3383MTD	MTD56	56-Lead Thin Shrink Small Outline Package (TSSOP), JEDEC MO-153, 6.1mm Wide
FIN3384MTD	MTD56	56-Lead Thin Shrink Small Outline Package (TSSOP), JEDEC MO-153, 6.1mm Wide
FIN3385MTD	MTD56	56-Lead Thin Shrink Small Outline Package (TSSOP), JEDEC MO-153, 6.1mm Wide
FIN3386MTD	MTD56	56-Lead Thin Shrink Small Outline Package (TSSOP), JEDEC MO-153, 6.1mm Wide

Devices also available in Tape and Reel. Specify by appending suffix letter "X" to the ordering code.

TABLE 1. Display Panel Link Serializers/Deserializers Chip Matrix

Part	CLK Frequency	LVTTL IN	LVDS OUT	LVDS IN	LVTTL OUT	Package
FIN3385	85	28	4			56 TSSOP
FIN3383	66	28	4			56 TSSOP
FIN3386	85			4	28	56 TSSOP
FIN3384	66			4	28	56 TSSOP

© 2005 Fairchild Semiconductor Corporation

Block Diagrams

Functional Diagram for FIN3385 and FIN3383

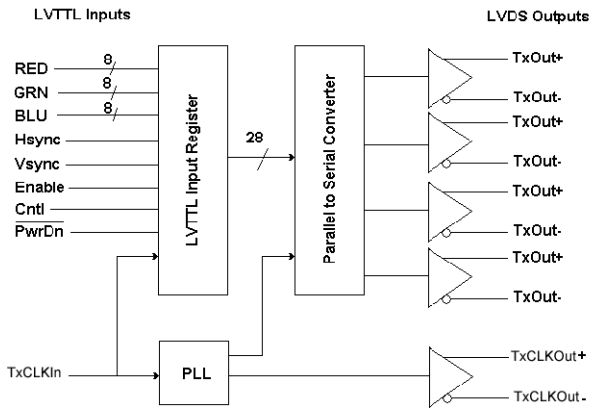

Receiver Functional Diagram for FIN3386 and FIN3384

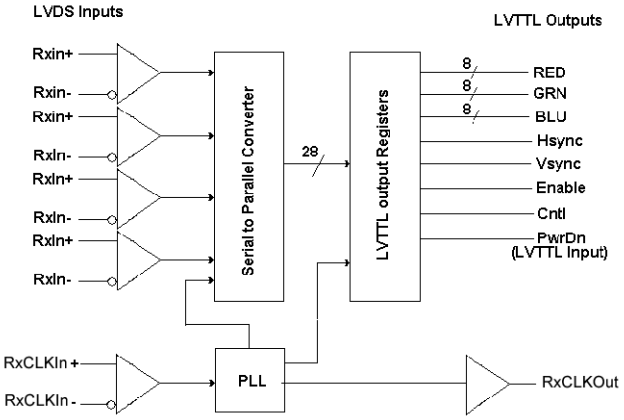

TRANSMITTERS

Pin Descriptions

Pin Names	I/O Type	Number of Pins	Description of Signals
TxIn	I	28/21	LVTTL Level Input
TxCLKIn	I	1	LVTTL Level Clock Input The rising edge is for data strobe.
TxOut+	O	4/3	Positive LVDS Differential Data Output
TxOut–	O	4/3	Negative LVDS Differential Data Output
TxCLKOut+	O	1	Positive LVDS Differential Clock Output
TxCLKOut–	O	1	Negative LVDS Differential Clock Output
R_FB	I	1	Rising Edge Clock (HIGH), Falling Edge Clock (LOW)
$\overline{\text{PwrDn}}$	I	1	LVTTL Level Power-Down Input Assertion (LOW) puts the outputs in High Impedance state.
PLL V_{CC}	I	1	Power Supply Pin for PLL
PLL GND	I	2	Ground Pins for PLL
LVDS V_{CC}	I	1	Power Supply Pin for LVDS Output
LVDS GND	I	3	Ground Pins for LVDS Output
V_{CC}	I	3	Power Supply Pins for LVTTL Input
GND	I	5	Ground pins for LVTTL Input
NC			No Connect

Connection Diagram

FIN3383 and FIN3385 (28:4 Transmitter)
Pin Assignment for TSSOP

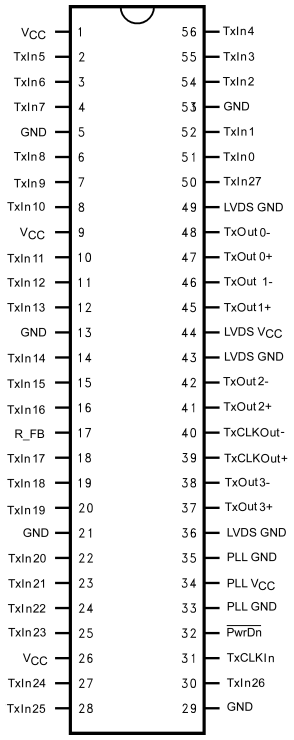

Truth Table

Inputs			Outputs	
TxIn	**TxCLKIn**	**$\overline{\text{PwrDn}}$ (Note 1)**	**TxOut±**	**TxCLKOut±**
Active	Active	H	L/H	L/H
Active	L/H/Z	H	L/H	X (Note 2)
F	Active	H	L	L/H
F	F	H	L	X (Note 2)
X	X	L	Z	Z

H = HIGH Logic Level
L = LOW Logic Level
X = Don't Care
Z = High Impedance
F = Floating

Note 1: The outputs of the transmitter or receiver will remain in a High Impedance state until V_{CC} reaches 2V.

Note 2: TxCLKOut± will settle at a free running frequency when the part is powered up, PwrDn is HIGH and the TxCLKIn is a steady logic level (L/H/Z).

RECEIVERS

Pin Descriptions

Pin Names	I/O Type	Number of Pins	Description of Signals
RxIn	I	4/3	Negative LVDS Differential Data Input
RxIn+	I	4/3	Positive LVDS Differential Data Input
RxCLKIn–	I	1	Negative LVDS Differential Clock Input
RxCLKIn+	I	1	Positive LVDS Differential Clock Input
RxOut	O	28/21	LVTTL Level Data Output Goes HIGH for PwrDn LOW
RxCLKOut	O	1	LVTTL Clock Output
$\overline{\text{PwrDn}}$	I	1	LVTTL Level Input Refer to Transmitter and Receiver Power-Up and Power-Down Operation Truth Table
PLL V_{CC}	I	1	Power Supply Pin for PLL
PLL GND	I	2	Ground Pins for PLL
LVDS V_{CC}	I	1	Power Supply Pin for LVDS Input
LVDS GND	I	3	Ground Pins for LVDS Input
V_{CC}	I	4	Power Supply for LVTTL Output
GND	I	5	Ground Pin for LVTTL Output
NC			No Connect

Connection Diagram

FIN3386 and FIN3384 (4:28 Receiver)
Pin Assignment for TSSOP

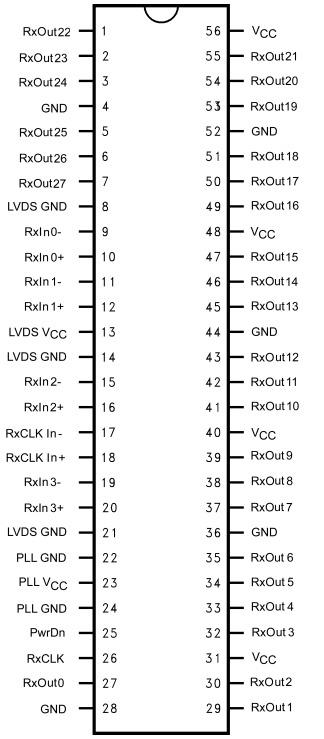

Transmitter and Receiver Power-Up/Power-Down Operation Truth Table

The outputs of the transmitter remain in the High-Impedance state until the power supply reaches 2V. The following table shows the operation of the transmitter during power-up and power-down and operation of the PwrDn pin.

Transmitter			**PwrDn**	**Normal**			
	V_{CC}	<2V	>2V	>2V	>2V	>2V	>2V
	TxIn	X	X	Active	Active		
	TxOut	Z	Z	Active	X		
	TxCLKIn	X	X	Active	H/L/Z		
	TxCLKOut±	Z	Z	Active	(Note 3)		
	PwrDn	L	L	H	H	H	H
Receiver			**PwrDn**				
	RxIn±	X	X	Active	Active	(Note 4)	(Note 4)
	RxOut	Z	L	L/H	P	H	P
	RxCLKIn±	X	X	Active	(Note 4)	Active	(Note 4)
	RxCLKOut	Z	(Note 5)	Active	(Note 5)	(Note 5)	(Note 5)
	PwrDn	L	L	H	H	H	H
	V_{CC}	<2V	<2V	<2V	<2V	<2V	<2V

H = HIGH Logic Level
L = LOW Logic Level
P = Last Valid State
X = Don't Care
Z = High-Impedance

Note 3: If the transmitter is powered up and PwrDn is inactive HIGH and the clock input goes to any state LOW, HIGH, or Z then the internal PLL will go to a known low frequency and stay until the clock starts normal operation again.

Note 4: If the input is terminated and un-driven (Z) or shorted or open. (fail safe condition)

Note 5: For PwrDn or fail safe condition the RxCLKOut pin will go LOW for Panel Link devices and HIGH for Channel Link devices.

Note 6: Shorted here means (± inputs are shorted to each other, or ± inputs are shorted to each other and Ground or V_{CC}, or either ± inputs are shorted to Ground or V_{CC}) with no other Current/Voltage sources (noise) applied. If the V_{ID} is still in the valid range (greater than 100mV) and VCM is in the valid range (0V to 2.4V) then the input signal is still recognized and the part will respond normally.

Absolute Maximum Ratings(Note 7)

Power Supply Voltage (V_{CC})	-0.3V to +4.6V
TTL/CMOS Input/Output Voltage	−0.5V to +4.6V
LVDS Input/Output Voltage	-0.3V to +4.6V
LVDS Output Short Circuit Current (I_{OSD})	Continuous
Storage Temperature Range (T_{STG})	−65°C to +150°C
Maximum Junction Temperature (T_J)	150°C
Lead Temperature (T_L)	
(Soldering, 4 seconds)	260°C
ESD Rating (HBM, 1.5 kΩ, 100 pF)	
I/O to GND	>10.0 kV
All Pins	>6.5 kV
ESD Rating (MM, 0Ω, 200 pF)	>400V

Recommended Operating Conditions

Supply Voltage (V_{CC})	3.0V to 3.6V
Operating Temperature (T_A)(Note 7)	−10°C to +70°C
Maximum Supply Noise Voltage	
(V_{CCNPP})	100 mV_{P-P} (Note 8)

Note 7: Absolute maximum ratings are DC values beyond which the device may be damaged or have its useful life impaired. The datasheet specifications should be met, without exception, to ensure that the system design is reliable over its power supply, temperature, and output/input loading variables. Fairchild does not recommend operation outside datasheet specifications.

Note 8: 100mV V_{CC} noise should be tested for frequency at least up to 2 MHz. All the specification below should be met under such a noise.

Transmitter DC Electrical Characteristics

Over supply voltage and operating temperature ranges, unless otherwise specified. (Note 9)

Symbol	Parameter	Test Conditions		Min	Typ	Max	Units
Transmitter LVTTL Input Characteristics							
V_{IH}	Input High Voltage			2.0		V_{CC}	V
V_{IL}	Input Low Voltage			GND		0.8	V
V_{IK}	Input Clamp Voltage	I_{IK} = −18 mA			−0.79	−1.5	V
I_{IN}	Input Current	V_{IN} = 0.4V to 4.6V			1.8	10.0	μA
		V_{IN} = GND		−10.0	0		
Transmitter LVDS Output Characteristics (Note 10)							
V_{OD}	Output Differential Voltage	R_L = 100 Ω, See Figure 1		250	TBD	450	mV
ΔV_{OD}	V_{OD} Magnitude Change from Differential LOW-to-HIGH					35.0	mV
V_{OS}	Offset Voltage			1.125	1.25	1.375	V
ΔV_{OS}	Offset Magnitude Change from Differential LOW-to-HIGH						mV
I_{OS}	Short Circuit Output Current	V_{OUT} = 0V			−3.5	−5.0	mA
I_{OZ}	Disabled Output Leakage Current	DO = 0V to 4.6V, $\overline{PwrDn}$ = 0V			±1.0	±10.0	μA
Transmitter Supply Current							
I_{CCWT}	28:4 Transmitter Power Supply Current for Worst Case Pattern (With Load) (Note 11)	R_L = 100 Ω, See Figure 3	32.5 MHz		31.0	49.5	mA
			40.0 MHz		32.0	55.0	
			66.0 MHz		37.0	60.5	
			85.0 MHz		42.0	66.0	
I_{CCPDT}	Powered Down Supply Current	$\overline{PwrDn}$ = 0.8V			10.0	55.0	μA
I_{CCGT}	28:4 Transmitter Supply Current for 16 Grayscale (Note 11)	See Figure 21 (Note 12)	32.5 MHz		29.0	41.8	mA
			40.0 MHz		30.0	44.0	
			65.0 MHz		35.0	49.5	
			85.0 MHz		39.0	55.0	

Note 9: All Typical values are at T_A = 25°C and with V_{CC} = 3.3V.

Note 10: Positive current values refer to the current flowing into device and negative values means current flowing out of pins. Voltage are referenced to ground unless otherwise specified (except ΔV_{OD} and V_{OD}).

Note 11: The power supply current for both transmitter and receiver can be different with the number of active I/O channels.

Note 12: The 16-grayscale test pattern tests device power consumption for a "typical" LCD display pattern. The test pattern approximates signal switching needed to produce groups of 16 vertical strips across the display.

Transmitter AC Electrical Characteristics

Over supply voltage and operating temperature ranges, unless otherwise specified.

Symbol	Parameter	Test Conditions	Min	Typ	Max	Units
t_{TCP}	Transmit Clock Period	See Figure 5	11.76	T	50.0	ns
t_{TCH}	Transmit Clock (TxCLKIn) HIGH Time		0.35	0.5	0.65	T
t_{TCL}	Transmit Clock Low Time		0.35	0.5	0.65	T
t_{CLKT}	TxCLKIn Transition Time (Rising and Failing)	(10% to 90%) See Figure 6	1.0		6.0	ns
t_{JIT}	TxCLKIn Cycle-to-Cycle Jitter				3.0	ns
t_{XIT}	TxIn Transition Time		1.5		6.0	ns
LVDS Transmitter Timing Characteristics						
t_{TLH}	Differential Output Rise Time (20% to 80%)	See Figure 4		0.75	1.5	ns
t_{THL}	Differential Output Fall Time (80% to 20%)			0.75	1.5	ns
t_{STC}	TxIn Setup to TxCLNIn	See Figure 5 (f = 85 MHz)	2.5			ns
t_{HTC}	TxIn Holds to TCLKIn		0			ns
t_{TPDD}	Transmitter Power-Down Delay	See Figure 12, (Note 13)			100	ns
t_{TCCD}	Transmitter Clock Input to Clock Output Delay	(T_A = 25°C and with V_{CC} = 3.3V)			5.5	ns
	Transmitter Clock Input to Clock Output Delay	See Figure 9	2.8		6.8	
Transmitter Output Data Jitter (f = 40 MHz) (Note 14)						
t_{TPPB0}	Transmitter Output Pulse Position of Bit 0	See Figure 16 $a = \frac{1}{f \times 7}$	–0.25	0	0.25	ns
t_{TPPB1}	Transmitter Output Pulse Position of Bit 1		a–0.25	a	a+0.25	ns
t_{TPPB2}	Transmitter Output Pulse Position of Bit 2		2a–0.25	2a	2a+0.25	ns
t_{TPPB3}	Transmitter Output Pulse Position of Bit 3		3a–0.25	3a	3a+0.25	ns
t_{TPPB4}	Transmitter Output Pulse Position of Bit 4		4a–0.25	4a	4a+0.25	ns
t_{TPPB5}	Transmitter Output Pulse Position of Bit 5		5a–0.25	5a	5a+0.25	ns
t_{TPPB6}	Transmitter Output Pulse Position of Bit 6		6a–0.25	6a	6a+0.25	ns
Transmitter Output Data Jitter (f = 65 MHz) (Note 14)						
t_{TPPB0}	Transmitter Output Pulse Position of Bit 0	See Figure 16 $a = \frac{1}{f \times 7}$	–0.2	0	0.2	ns
t_{TPPB1}	Transmitter Output Pulse Position of Bit 1		a–0.2	a	a+0.2	ns
t_{TPPB2}	Transmitter Output Pulse Position of Bit 2		2a–0.2	2a	2a+0.2	ns
t_{TPPB3}	Transmitter Output Pulse Position of Bit 3		3a–0.2	3a	3a+0.2	ns
t_{TPPB4}	Transmitter Output Pulse Position of Bit 4		4a–0.2	4a	4a+0.2	ns
t_{TPPB5}	Transmitter Output Pulse Position of Bit 5		5a–0.2	5a	5a+0.2	ns
t_{TPPB6}	Transmitter Output Pulse Position of Bit 6		6a–0.2	6a	6a+0.2	ns
Transmitter Output Data Jitter (f = 85 MHz) (Note 14)						
t_{TPPB0}	Transmitter Output Pulse Position of Bit 0	See Figure 16 $a = \frac{1}{f \times 7}$	–0.2	0	0.2	ns
t_{TPPB1}	Transmitter Output Pulse Position of Bit 1		a–0.2	a	a+0.2	ns
t_{TPPB2}	Transmitter Output Pulse Position of Bit 2		2a–0.2	2a	2a+0.2	ns
t_{TPPB3}	Transmitter Output Pulse Position of Bit 3		3a–0.2	3a	3a+0.2	ns
t_{TPPB4}	Transmitter Output Pulse Position of Bit 4		4a–0.2	4a	4a+0.2	ns
t_{TPPB5}	Transmitter Output Pulse Position of Bit 5		5a–0.2	5a	5a+0.2	ns
t_{TPPB6}	Transmitter Output Pulse Position of Bit 6		6a–0.2	6a	6a+0.2	ns
t_{JCC}	FIN3385 Transmitter Clock Out Jitter (Cycle-to-Cycle) See Figure 20	f = 40 MHz		350	370	ps
		f = 65 MHz		210	230	
		f = 85 MHz		110	150	
t_{TPLLS}	Transmitter Phase Lock Loop Set Time (Note 15)	See Figure 22, (Note 14)			10.0	ms

Note 13: Outputs of all transmitters stay in 3-STATE until power reaches 2V. Both clock and data output begins to toggle 10ms after V_{CC} reaches 3V and Power-Down pin is above 1.5V.

Note 14: This output data pulse position works for TTL inputs except the LVDS output bit mapping difference (see Figure 14). Figure 16 shows the skew between the first data bit and clock output. Also 2-bit cycle delay is guaranteed when the MSB is output from transmitter.

Note 15: This jitter specification is based on the assumption that PLL has a ref clock with cycle-to-cycle input jitter less than 2ns.

Receiver DC Electrical Characteristics

Over supply voltage and operating temperature ranges, unless otherwise specified. (Note 16)

Symbol	Parameter	Test Conditions		Min	Typ	Max	Units
LVTTL/CMOS DC Characteristics							
V_{IH}	Input High Voltage			2.0		V_{CC}	V
V_{IL}	Input Low Voltage			GND		0.8	V
V_{OH}	Output High Voltage	I_{OH} = −0.4 mA		2.7	3.3		V
V_{OL}	Output Low Voltage	I_{OL} = 2mA			0.06	0.3	V
V_{IK}	Input Clamp Voltage	I_{IK} = −18 mA			−0.79	−1.5	V
I_{IN}	Input Current	V_{IN} = 0V to 4.6V		−10.0		10.0	μA
I_{OFF}	Input/Output Power Off Leakage Current	V_{CC} = 0V, All LVTTL Inputs/Outputs 0V to 4.6V				±10.0	μA
I_{OS}	Output Short Circuit Current	V_{OUT} = 0V			−60.0	−120	mA
Receiver LVDS Input Characteristics							
V_{TH}	Differential Input Threshold HIGH	Figure 2, Table 2				100	mV
V_{TL}	Differential Input Threshold LOW	Figure 2, Table 2		−100			mV
V_{ICM}	Input Common Mode Range	Figure 2, Table 2		0.05		2.35	V
I_{IN}	Input Current	V_{IN} = 2.4V, V_{CC} = 3.6V or 0V				±10.0	μA
		V_{IN} = 0V, V_{CC} = 3.6V or 0V				±10.0	μA
Receiver Supply Current							
I_{CCWR}	4:28 Receiver Power Supply Current for Worst Case Pattern (With Load) (Note 17)	C_L = 8 pF, See Figure 3	32.5 MHz			70.0	mA
			40.0 MHz			75.0	
			66.0 MHz			114	
			85.0 MHz			135	
I_{CCWR}	3:21 Receiver Power Supply Current for Worst Case Pattern (With Load) (Note 17)	C_L = 8 pF, See Figure 3	32.5 MHz		49.0	60.0	mA
			40.0 MHz		53.0	65.0	
			66.0 MHz		78.0	100	
			85.0 MHz		90.0	115	
I_{CCPDT}	Powered Down Supply Current	$\overline{PwrDn}$ = 0.8V (RxOut stays LOW)			NA	55.0	μA
t_{RCOP}	Receiver Clock Output (RxCLKOut) Period	See Figure 8 (f = 85MHz) (Rising Edge Strobe)		11.76	T	50.0	
t_{RCOL}	RxCLKOut LOW Time			4.0	5.0	6.0	ns
t_{RCOH}	RxCLKOut HIGH Time			4.5	5.0	6.5	ns
t_{RSRC}	RxOut Valid Prior to RxCLKOut			3.5			ns
t_{RHRC}	RxOut Valid After RxCLKOut			3.5			ns
t_{ROLH}	Output Rise Time (20% to 80%)	C_L = 8 pF, See Figure 4			2.0	3.5	ns
t_{ROHL}	Output Fall Time (80% to 20%)				1.8	3.5	ns
t_{RCCD}	Receiver Clock Input to Clock Output Delay	See Figure 20, (Note 18) T_A = 25°C and V_{CC} = 3.3V		3.5	5.0	7.5	ns
t_{RPDD}	Receiver Power-Down Delay	See Figure 13				1.0	μs
t_{RSPB0}	Receiver Input Strobe Position of Bit 0	See Figure 17 (f = 85MHz)		0.49	0.84	1.19	ns
t_{RSPB1}	Receiver Input Strobe Position of Bit 1			2.17	2.52	2.87	ns
t_{RSPB2}	Receiver Input Strobe Position of Bit 2			3.85	4.20	4.55	ns
t_{RSPB3}	Receiver Input Strobe Position of Bit 3			5.53	5.88	6.23	ns
t_{RSPB4}	Receiver Input Strobe Position of Bit 4			7.21	7.56	7.91	ns
t_{RSPB5}	Receiver Input Strobe Position of Bit 5			8.89	9.24	9.59	ns
t_{RSPB6}	Receiver Input Strobe Position of Bit 6			10.57	10.92	11.27	ns
t_{RSKM}	RxIN Skew Margin	See Figure 17, (Note 19)		290			ps
t_{RPLLS}	Receiver Phase Lock Loop Set Time	See Figure 11				10.0	ms

Note 16: All Typical values are at T_A = 25°C and with V_{CC} = 3.3V. Positive current values refer to the current flowing into device and negative values means current flowing out of pins. Voltage are referenced to ground unless otherwise specified (except ΔV_{OD} and V_{OD}).

Note 17: The power supply current for the receiver can be different with the number of active I/O channels.

Note 18: Total channel latency from Sewrializer to deserializer is (T + t_{TCCD}). There is the clock period.

Note 19: Receiver skew margin is defined as the valid sampling window after considering potential setup/hold time and minimum/maximum bit position.

Receiver AC Electrical Characteristics (66MHz)

Symbol	Parameter	Test Conditions	Min	Typ	Max	Units
t_{RCOP}	Receiver Clock Output (RxCLKOut) Period	See Figure 8	15.0	T	50.0	ns
t_{RCOL}	RxCLKOut LOW Time	See Figure 8 (Rising Edge Strobe) (f = 40 MHz)	10.0	11.0		ns
t_{RCOH}	RxCLKOut HIGH Time		10.0	12.2		ns
t_{RSRC}	RxOut Valid Prior to RxCLKOut		6.5	11.6		ns
t_{RHRC}	RxOut Valid After RxCLKOut		6.0	11.6		ns
t_{RCOL}	RxCLKOut LOW Time	See Figure 8, (Note 20) (Rising Edge Strobe) (f = 66 MHz)	5.0	6.3	9.0	ns
t_{RCOH}	RxCLKOut HIGH Time		5.0	7.6	9.0	ns
t_{RSRC}	RxOut Valid Prior to RxCLKOut		4.5	7.3		ns
t_{RHRC}	RxOut Valid After RxCLKOut		4.0	6.3		ns
t_{ROLH}	Output Rise Time (20% to 80%)	C_L = 8 pF, (Note 20)		2.0	5.0	ns
t_{ROHL}	Output Fall Time (80% to 20%)	See Figure 8		1.8	5.0	ns
t_{RCCD}	Receiver Clock Input to Clock Output Delay	See Figure 10, (Note 21) T_A = 25°C and V_{CC} = 3.3V	3.5	5.0	7.5	ns
t_{RPDD}	Receiver Power-Down Delay	See Figure 13			1.0	µs
t_{RSPB0}	Receiver Input Strobe Position of Bit 0	See Figure 17 (f = 40 MHz)	1.0	1.4	2.15	ns
t_{RSPB1}	Receiver Input Strobe Position of Bit 1		4.5	5.0	5.8	ns
t_{RSPB2}	Receiver Input Strobe Position of Bit 2		8.1	8.5	9.15	ns
t_{RSPB3}	Receiver Input Strobe Position of Bit 3		11.6	11.9	12.6	ns
t_{RSPB4}	Receiver Input Strobe Position of Bit 4		15.1	15.6	16.3	ns
t_{RSPB5}	Receiver Input Strobe Position of Bit 5		18.8	19.2	19.9	ns
t_{RSPB6}	Receiver Input Strobe Position of Bit 6		22.5	22.9	23.6	ns
t_{RSPB0}	Receiver Input Strobe Position of Bit 0	See Figure 17 (f = 65 MHz)	0.7	1.1	1.4	ns
t_{RSPB1}	Receiver Input Strobe Position of Bit 1		2.9	3.3	3.6	ns
t_{RSPB2}	Receiver Input Strobe Position of Bit2		5.1	5.5	5.8	ns
t_{RSPB3}	Receiver Input Strobe Position of Bit 3		7.3	7.7	8.0	ns
t_{RSPB4}	Receiver Input Strobe Position of Bit 4		9.5	9.9	10.2	ns
t_{RSPB5}	Receiver Input Strobe Position of Bit 5		11.7	12.1	12.4	ns
t_{RSPB6}	Receiver Input Strobe Position of Bit 6		13.9	14.3	14.6	ns
t_{RSKM}	RxIn Skew Margin See Figure 17, (Note 22)	f = 40 MHz	490			ps
		f = 66 MHz	400			
t_{RPLLS}	Receiver Phase Lock Loop Set Time	See Figure 11			10.0	ms

Note 20: For the receiver with falling-edge strobe, the definition of setup/hold time will be slightly different from the one with rising-edge strobe. The clock reference point is the time when the clock falling edge passes through 2V. For hold time t_{RHRC}, the clock reference point is the time when falling edge passes through +0.8V.

Note 21: Total channel latency from Sewrializer to deserializer is $(T + t_{TCCD}) + (2*T + t_{RCCD})$. There is the clock period.

Note 22: Receiver skew margin is defined as the valid sampling window after considering potential setup/hold time and minimum/maximum bit position.

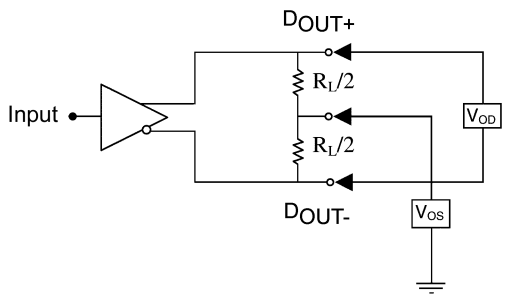

FIGURE 1. Differential LVDS Output DC Test Circuit

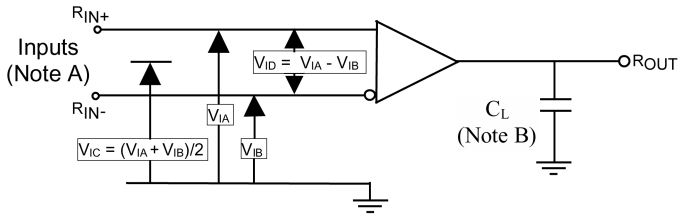

Note A: For all input pulses, t_R or t_F < = 1 ns.
Note B: C_L includes all probe and jig capacitance.

FIGURE 2. Differential Receiver Voltage Definitions and Propagation Delay and Transition Time Test Circuit

TABLE 2. Receiver Minimum and Maximum Input Threshold Test Voltages

Applied Voltages (V)		Resulting Differential Input Voltage (mV)	Resulting Common Mode Input Voltage (V)
V_{IA}	V_{IB}	V_{ID}	V_{IC}
1.25	1.15	100	1.2
1.15	1.25	−100	1.2
2.4	2.3	100	2.35
2.3	2.4	−100	2.35
0.1	0	100	0.05
0	0.1	−100	0.05
1.5	0.9	600	1.2
0.9	1.5	−600	1.2
2.4	1.8	600	2.1
1.8	2.4	−600	2.1
0.6	0	600	0.3
0	0.6	−600	0.3

AC Loading and Waveforms

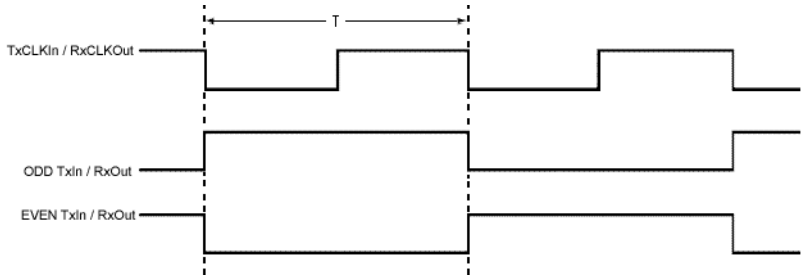

Note: The worst case test pattern produces a maximum toggling of digital circuits, LVDS I/O and LVTTL/CMOS I/O. Depending on the valid strobe edge of transmitter, the TxCLKIn can be either rising or falling edge data strobe.

FIGURE 3. "Worst Case" Test Pattern

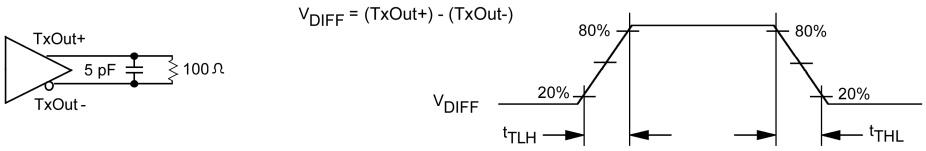

FIGURE 4. Transmitter LVDS Output Load and Transition Times

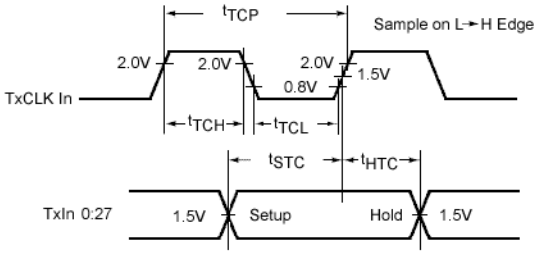

FIGURE 5. Transmitter Setup/Hold and HIGH/LOW Times (Rising Edge Strobe)

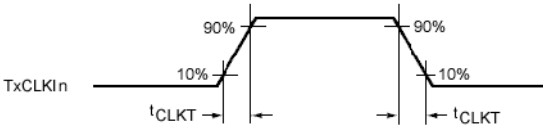

FIGURE 6. Transmitter Input Clock Transition Time

AC Loading and Waveforms (Continued)

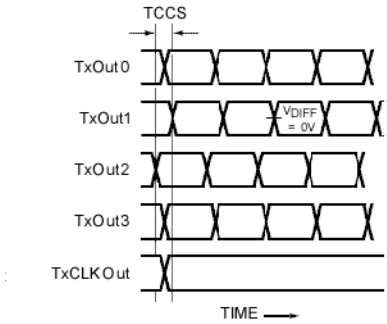

FIGURE 7. Transmitter Outputs Channel-to-Channel Skew

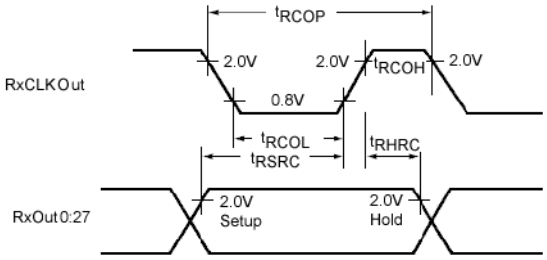

Note: For the receiver with falling-edge strobe, the definition of setup/hold time will be slightly different from the one with rising-edge strobe. The clock reference point is the time when the clock falling edge passes through 2V. For hold time t_{RHRC}, the clock reference point is the time when falling edge passes through +0.8V.

FIGURE 8. (Receiver) Setup/Hold and HIGH/LOW Times

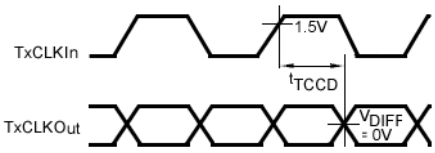

FIGURE 9. Transmitter Clock In to Clock Out Delay (Rising Edge Strobe)

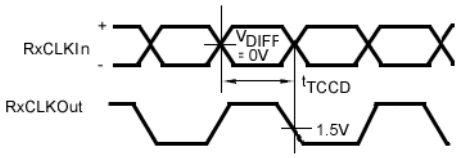

FIGURE 10. Receiver Clock In to Clock Out Delay (Falling Edge Strobe)

AC Loading and Waveforms (Continued)

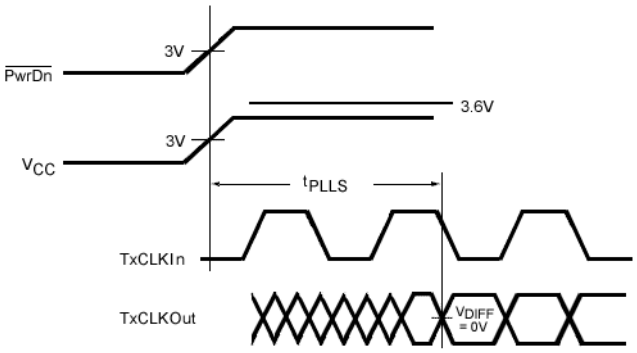

FIGURE 11. Receiver Phase Lock Loop Set Time

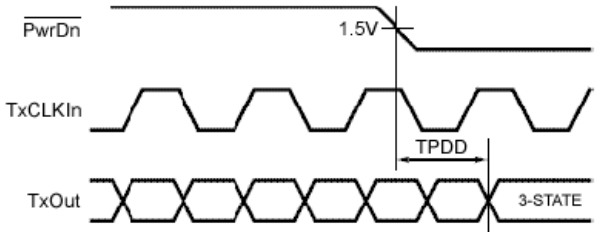

FIGURE 12. Transmitter Power-Down Delay

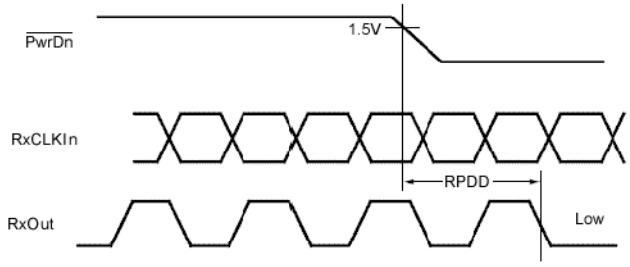

FIGURE 13. Receiver Power-Down Delay

AC Loading and Waveforms (Continued)

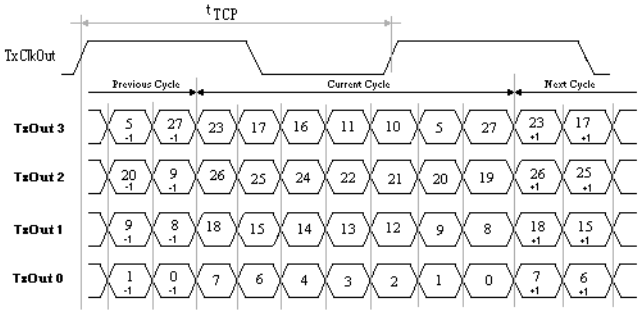

Note: The information in this diagram shows the relationship between clock out and the first data bit. A 2-bit cycle delay is guaranteed when the MSB is output from the transmitter.

FIGURE 14. 28 Parallel LVTTL Inputs Mapped to 4 Serial LVDS Outputs

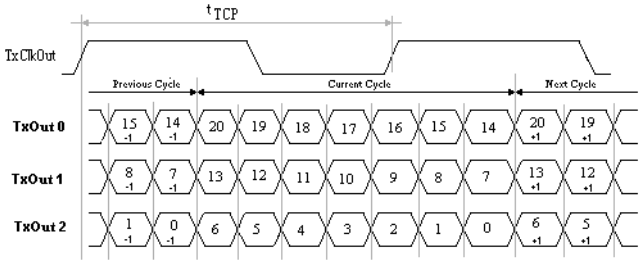

Note: This output data pulse position works for both transmitter with 28 or 21 TTL inputs except the LVDS output bit mapping difference. All the information in this diagram tells that the skew between the first data bit and clock output. Also 2-bit cycle delay is guaranteed when the MSB is output from transmitter.

FIGURE 15. 21 Parallel LVTTL Inputs Mapped to 3 Serial LVDS Outputs

AC Loading and Waveforms (Continued)

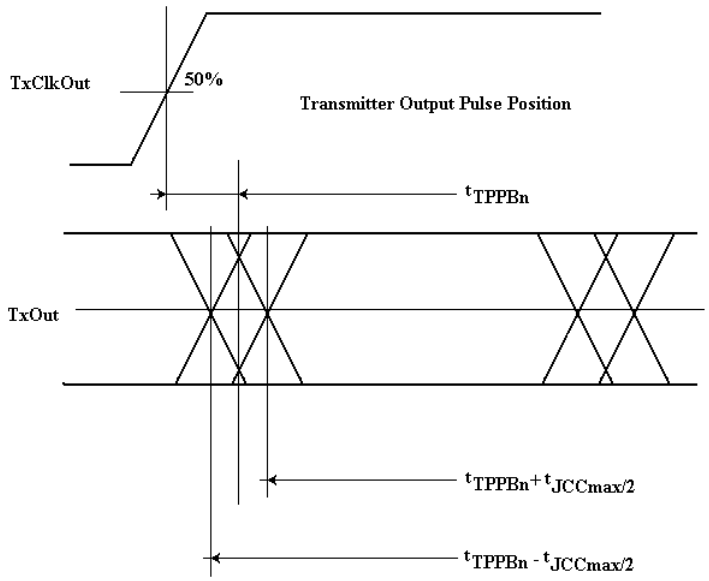

FIGURE 16. Transmitter Output Pulse Bit Position

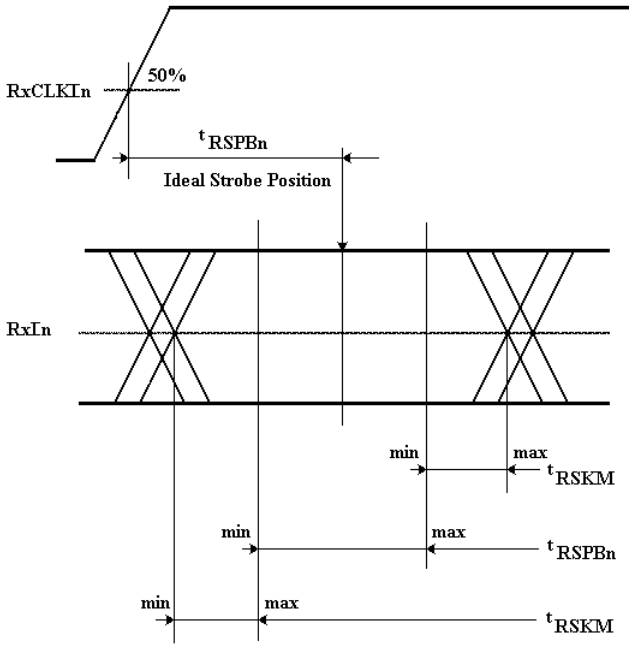

FIGURE 17. Receiver Input Bit Position

AC Loading and Waveforms (Continued)

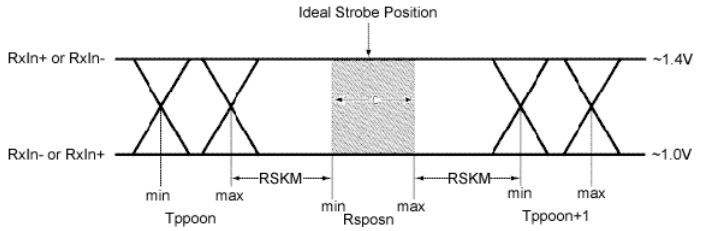

Note: t_{RSKM} is the budget for the cable skew and source clock skew plus ISI (Inter-Symbol Interference).

Note: The minimum and maximum pulse position values are based on the bit position of each of the 7 bits within the LVDS data stream across PVT (Process, Voltage Supply, and Temperature).

FIGURE 18. Receiver LVDS Input Skew Margin

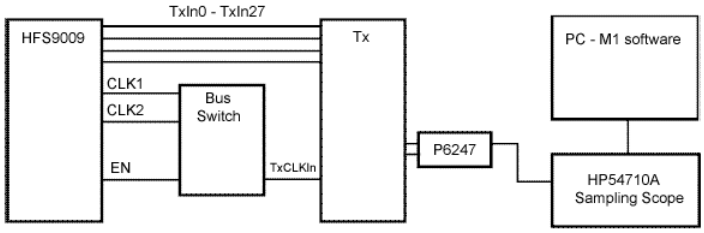

Note: Test setup used considers no requirement for separation of RMS and deterministic jitter. Other hardware setup such as Wavecrest boxes can be used if no M1 software is available, but the test methodology in Figure 20 should be followed.

FIGURE 19. Transmitter Clock Out Jitter Measurement Setup

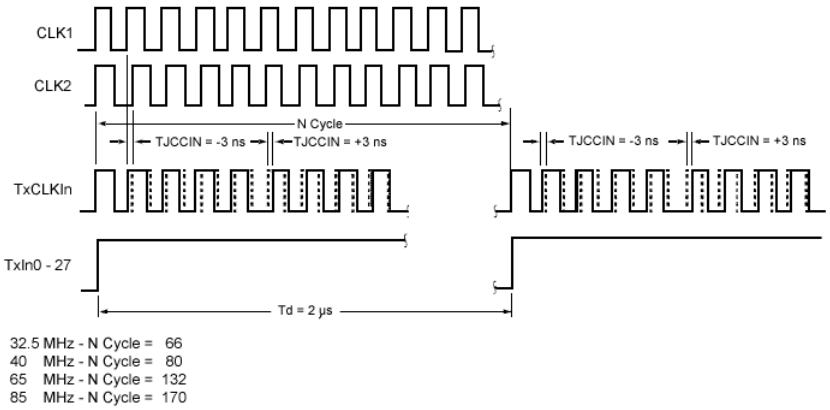

Note: This jitter pattern is used to test the jitter response (Clock Out) of the device over the power supply range with worst jitter ±3ns (cycle-to-cycle) clock input. The specific test methodology is as follows:

- Switching input data TxIn0 to TxIn20 at 0.5 MHz, and the input clock is shifted to left −3ns and to the right +3ns when data is HIGH.
- The ±3 ns cycle-to-cycle input jitter is the static phase error between the two clock sources. Jumping between two clock sources to simulate the worst case of clock edge jump (3 ns) from graphical controllers. Cycle-to-cycle jitter at TxCLK out pin should be measured cross V_{CC} range with 100mV noise (V_{CC} noise frequency <2 MHz).

FIGURE 20. Timing Diagram of Transmitter Clock Input with Jitter

AC Loading and Waveforms (Continued)

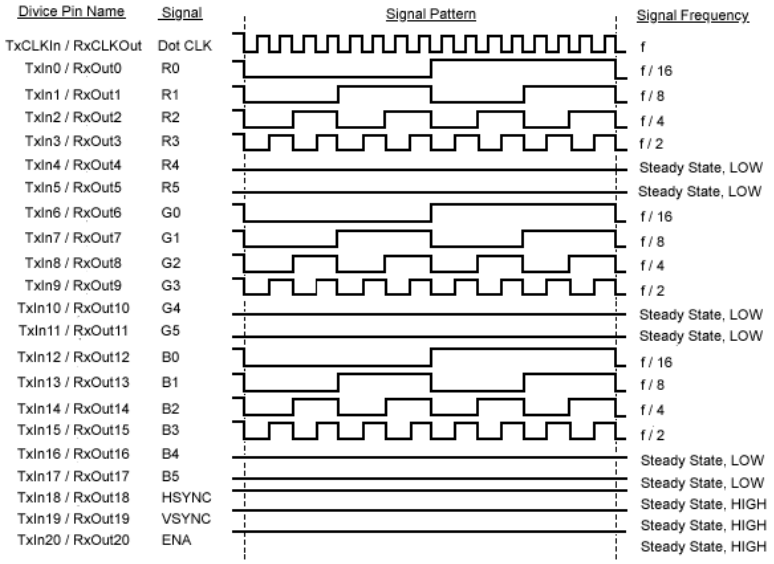

Note: The 16-grayscale test pattern tests device power consumption for a "typical" LCD display pattern. The test pattern approximates signal switching needed to produce groups of 16 vertical strips across the display.

FIGURE 21. "16 Grayscale" Test Pattern

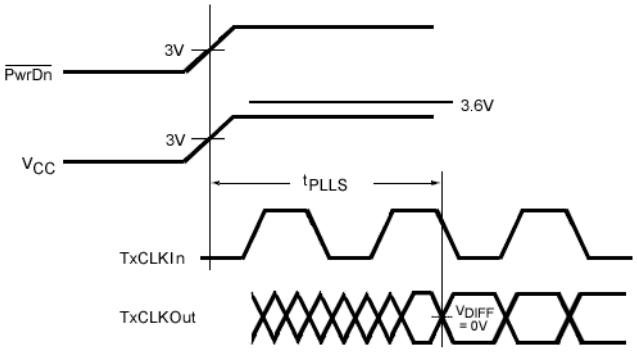

FIGURE 22. Transmitter Phase Lock Loop Time

Physical Dimensions inches (millimeters) unless otherwise noted

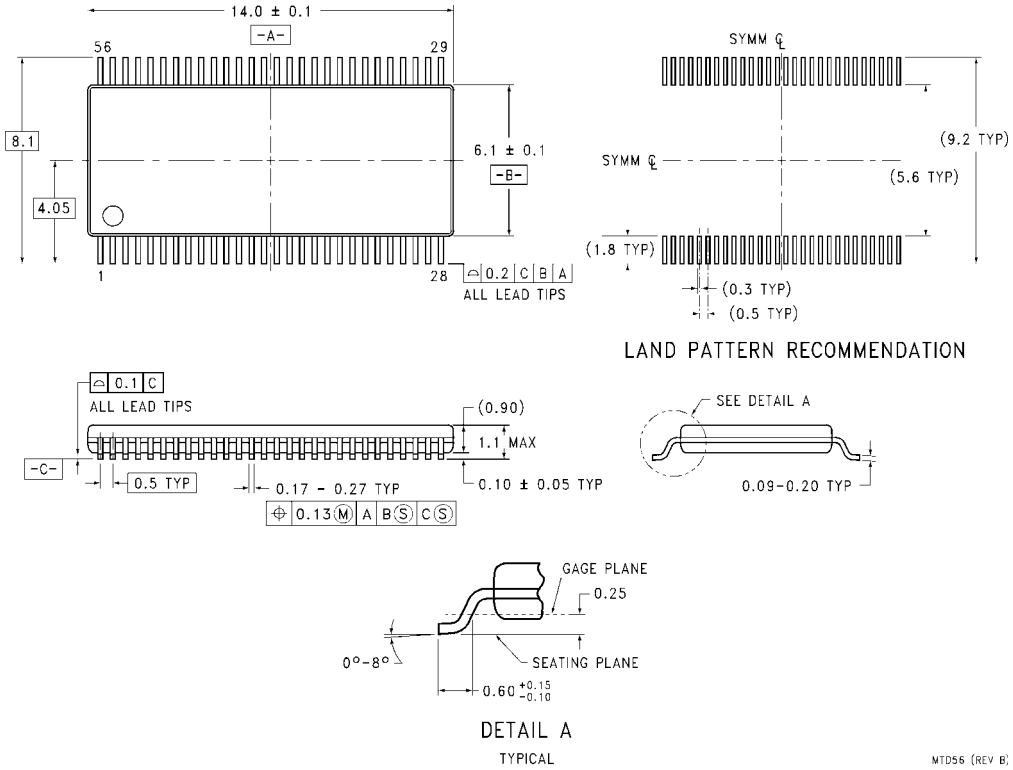

56-Lead Thin Shrink Small Outline Package (TSSOP), JEDEC MO-153, 6.1mm Wide
Package Number MTD56

Fairchild does not assume any responsibility for use of any circuitry described, no circuit patent licenses are implied and Fairchild reserves the right at any time without notice to change said circuitry and specifications.

LIFE SUPPORT POLICY

FAIRCHILD'S PRODUCTS ARE NOT AUTHORIZED FOR USE AS CRITICAL COMPONENTS IN LIFE SUPPORT DEVICES OR SYSTEMS WITHOUT THE EXPRESS WRITTEN APPROVAL OF THE PRESIDENT OF FAIRCHILD SEMICONDUCTOR CORPORATION. As used herein:

1. Life support devices or systems are devices or systems which, (a) are intended for surgical implant into the body, or (b) support or sustain life, and (c) whose failure to perform when properly used in accordance with instructions for use provided in the labeling, can be reasonably expected to result in a significant injury to the user.
2. A critical component in any component of a life support device or system whose failure to perform can be reasonably expected to cause the failure of the life support device or system, or to affect its safety or effectiveness.

www.fairchildsemi.com

О компании

ООО "ТрейдЭлектроникс" - это оперативные поставки широкого спектра электронных компонентов отечественного и импортного производства напрямую от производителей и с крупнейших мировых складов. Реализуемая нашей компанией продукция насчитывает более полумиллиона наименований.

Благодаря этому наша компания предлагает к поставке практически не ограниченный ассортимент компонентов как оптовыми, мелкооптовыми партиями, так и в розницу.

Наличие собственной эффективной системы логистики обеспечивает надежную поставку продукции по конкурентным ценам в точно указанные сроки.

Срок поставки со стоков в **Европе и Америке – от 3 до 14 дней.**

Срок поставки из **Азии – от 10 дней.**

Благодаря развитой сети поставщиков, помогаем в поиске и приобретении экзотичных или снятых с производства компонентов.

Предоставляем спец цены на элементы для создания инженерных сэмплов.

Упорный труд, качественный результат дают нам право быть уверенными в себе и надежными для наших клиентов.

Наша компания это:

- Гарантия качества поставляемой продукции
- Широкий ассортимент
- Минимальные сроки поставок
- Техническая поддержка
- Подбор комплектации
- Индивидуальный подход
- Гибкое ценообразование

Наша организация особенно сильна в поставках модулей, микросхем, пассивных компонентов, ксайленсах (XC), EPF, EPM и силовой электроники.

Большой выбор предлагаемой продукции, различные виды оплаты и доставки, позволят Вам сэкономить время и получить максимум выгоды от сотрудничества с нами!

Trade Electronics.ru

гарантия бесперебойности производства и качества выпускаемой продукции

Перечень производителей, продукцию которых мы поставляем на российский рынок

AMD
ANALOG DEVICES
BOURNS
Coilcraft
élantec Semiconductor, Inc.
HARRIS
Infineon
JRC
MICREL
MOTOROLA
nichicon
PHILIPS
ROHM
SGS-THOMSON
Sipex
TAIYO YUDEN
TOKO
ZILOG
Winbond
Allegro
ATMEL
BURR - BROWN
EXAR
HITACHI
intel
Lattice
muRata
OKI
QUALCOMM
SAMSUNG
SHARP
SONY
TDK
TOSHIBA
KYOCERA
ALTERA
AVX
CITILYST
CYPRESS
FAIRCHILD SEMICONDUCTOR
HOLTEK
International IOR Rectifier
LINEAR TECHNOLOGY
MITSUBISHI
National Semiconductor
ON Semiconductor
REALTEK
SANYO
SHINDENGEN
SGS
TECCOR
TUNDRA
XILINX
Amphenol
Bay Linear
CIRRUS LOGIC
DALLAS
FUJITSU
IDT
intersil
MAXIM
molex
NEC
Panasonic
RENESAS
SII
SIEMENS
ST
Texas Instruments
VISHAY
ZETEX SEMICONDUCTORS

Trade Electronics.ru

гарантия бесперебойности производства и качества выпускаемой продукции

С удовольствием будем прорабатывать для Вас поставки всех необходимых компонентов по текущим запросам для скорейшего выявления групп элементов, по которым сотрудничество именно с нашей компанией будет для Вас максимально выгодным!

С уважением,

Менеджер отдела продаж ООО

«Трейд Электроникс»

Шишлаков Евгений

8 (495)668-30-28 доб 169

manager28@tradeelectronics.ru

http://www.tradeelectronics.ru/