agere systems

Data Sheet, Rev. 3
July 2001

D2570, D2526, D2555 Wavelength-Selected Direct Modulated Isolated DFB Laser Module

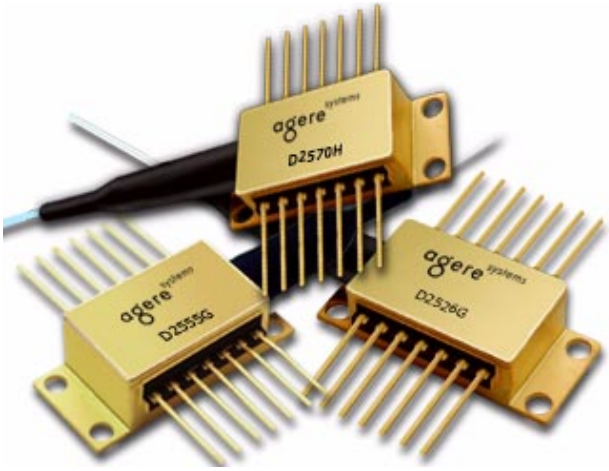

The 1.5 µm D2570, D2526G, and D2555 Laser Modules are available in a 14-pin, hermetic, butterfly package.

Features

- ITU wavelengths available from 1528.77 nm —1610.06 nm
- SONET/SDH compatible up to OC-48/STM-16
- Temperature tunable for precise wavelength selection
- Integrated optical isolator
- High-performance, multiquantum well (MQW) distributed-feedback (DFB) laser
- Industry-standard, 14-pin butterfly package
- Characterized at 2.488 Gbits/s (NRZ)
- InGaAs, PIN photodetector back-facet monitor
- Low threshold current
- High-reliability, hermetic packaging
- Excellent long-term wavelength stability can eliminate the need for external wavelength locker
- Qualified to meet the intent of *Telcordia Technologies** 468

* *Telcordia Technologies* is a trademark of Telcordia Technologies, Inc.

Applications

- Three direct-modulated DWDM families available to meet a number of OC-48/STM-16 applications:
  - Extended reach (100 km)
  - Very long reach (170 km)
  - Metro DWDM
  - Digital video

Product Codes

Product Code	Peak Power	Dispersion Performance
D2570H	10 mW	1800 ps/nm (100 km)
D2526G	2 mW	1800 ps/nm (100 km)
D2555G	2 mW	3000 ps/nm (170 km)

Description

The Direct Modulated Isolated DFB Laser Module contains an internally cooled, InGaAs, MQW, distributed-feedback (DFB) laser designed for 1.5 µm applications. The following three direct-modulation DWDM product families have been established to meet various OC-48/STM-16 system applications:

- D2526-type: designed to be used in OC-48/STM-16 (2.488 Gbits/s) for extended reach, dense WDM applications (1800 ps/nm). The wavelength of the laser can be temperature-tuned for precise wavelength selection by adjusting the temperature of the internal thermoelectric cooler.
- D2555-type: high-performance device designed for very low dispersion; used in fiber spans exceeding 170 km (3000 ps/nm).
- D2570-type: high-power, direct-modulated laser eliminates the need for optical amplifiers in DWDM many applications.

Description (continued)

Controlled Feedback

The module contains an internal optical isolator that suppresses optical feedback in laser-based, fiber-optic systems. Light reflected back to the laser is attenuated a minimum of 30 dB.

Controlled Temperature

An integral thermoelectric cooler (TEC) provides stable thermal characteristics. The TEC allows for heating and cooling of the laser chip to maintain a temperature of 25 °C for case temperatures from –40 °C to +70 °C. The laser temperature is monitored by the internal thermistor, which can be used with external circuitry to control the laser chip temperature.

Controlled Power

An internal, InGaAs, PIN photodiode functions as the back-facet monitor. The photodiode monitors emission from the rear facet of the laser and, when used in conjunction with control circuitry, can control optical power launched into the fiber. Normally, this configuration is used in a feedback arrangement to maintain consistent laser output power.

Standard Package

The laser module is fabricated in a 14-pin, hermetic, metal/ceramic butterfly package that incorporates a bias tee, which separates the dc-bias path from the RF input. The RF input has a nominal 25 Ω impedance.

The laser module is equipped with *SMF-28** type fiber. The fiber has a 900 µm tight buffer jacket. Various connectors and pigtail lengths are available.

Agere Systems' optoelectronic components are being qualified to rigorous internal standards that are consistent with *Telcordia Technologies* TR-NWT-000468. All design and manufacturing operations are *ISO** 9001 certified. The module is being fully qualified for central office applications.

* *ISO* is a registered trademark of The International Organization for Standardization.
† *SMF-28* is a trademark of Corning Inc.

Pin Information

Pin	Name
1	Thermistor
2	Thermistor
3	Laser dc Bias (Cathode) (–)
4	Back-facet Monitor Anode (–)
5	Back-facet Monitor Cathode (+)
6	Thermoelectric Cooler (+)*
7	Thermoelectric Cooler (–)†
8	Case Ground
9	Case Ground
10	Case Ground
11	Laser Anode (+)†
12	RF Laser Input Cathode (–)
13	Laser Anode (+)†
14	Case Ground

* A positive current through the thermoelectric heat pump cools the laser.
† Both leads should be grounded for optimum performance.

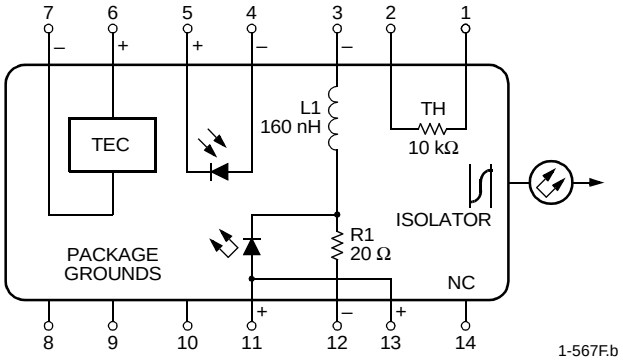

Top view.

Figure 1. Circuit Schematic

Absolute Maximum Ratings

Stresses in excess of the absolute maximum ratings can cause permanent damage to the device. These are absolute stress ratings only. Functional operation of the device is not implied at these or any other conditions in excess of those given in the performance characteristics of the data sheet. Exposure to absolute maximum ratings for extended periods can adversely affect device reliability.

Parameter	Symbol	Min	Max	Unit
Laser Reverse Voltage	V_{RLMAX}	—	2	V
dc Forward Current	I_{FLMAX}	—	150	mA
Operating Case Temperature Range	T_C	–40	70	°C
Storage Case Temperature Range*	T_{stg}	–40	85	°C
Photodiode Reverse Voltage	V_{RPDMAX}	—	10	V
Photodiode Forward Current	I_{FPDMAX}	—	2	mA

* Does not apply to shipping container.

Handling Precautions

Power Sequencing

To avoid the possibility of damage to the laser module from power supply switching transients, follow this turn-on sequence:

1. All ground connections
2. Most negative supply
3. Most positive supply
4. All remaining connections

Reverse the order for the proper turn-off sequence.

Electrostatic Discharge

CAUTION: This device is susceptible to damage as a result of electrostatic discharge. Take proper precautions during both handling and testing. Follow guidelines such as JEDEC Publication No. 108-A (Dec. 1988).

Agere Systems employs a human-body model (HBM) for ESD-susceptibility testing and protection-design evaluation. ESD voltage thresholds are dependent on the critical parameters used to define the model. A standard HBM (resistance = 1.5 k¾, capacitance = 100 pF) is widely used and, therefore, can be used for comparison purposes. The HBM ESD threshold presented here was obtained using these circuit parameters:

Parameter	Value	Unit
Human-body Model	>400	V

Mounting Instructions

The minimum fiber bend radius is 1.23 in (31.25 mm).

To avoid degradation in performance, mount the module on the board as follows:

1. Place the bottom flange of the module on a flat heat sink at least 0.5 in. x 1.180 in. (12.7 mm x 30 mm) in size. The surface finish of the heat sink should be better than 32 µin. (0.8 µm), and the surface flatness must be better than 0.001 in. (25.4 µm). Using thermal conductive grease is optional; however, thermal performance can be improved by up to 5% if conductive grease is applied between the bottom flange and the heat sink.
2. Mount four #2-56 screws with Fillister heads (M2-3 mm) at the four screw hole locations (see Outline Diagram). The Fillister head diameter must not exceed 0.140 in. (3.55 mm). Do not apply more than 1 in./lb. of torque to the screws.

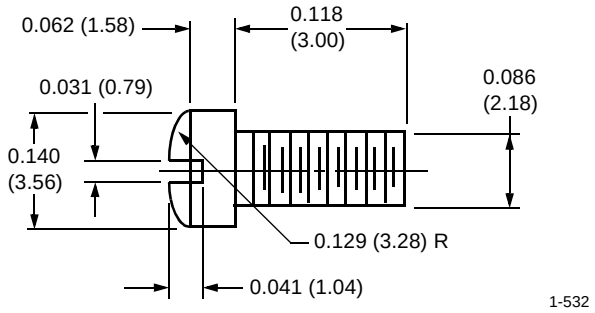

Note: Dimensions are in inches and (millimeters).

Figure 2. Fillister Head Screw

D2526 Characteristics

Minimum and maximum values are testing requirements. Typical values are characteristics of the device and are the result of engineering evaluations. Typical values are for information purposes only and are not part of the testing requirements.

Table 1. Electrical Characteristics (at 25 °C laser temperature)

Parameter	Symbol	Test Conditions	Min	Typ	Max	Unit
Slope Efficiency	η	L_F = 2 mW (CW)	0.06	0.09	0.13	mW/mA
Threshold Current	I_{TH}	—	—	14	30	mA
Laser Forward Voltage	V_{LF}	L_F = 2 mW (CW)	—	1.3	1.8	V
Laser Submount Temperature	T_{LASER}	—	20	—	30	°C
Monitor Reverse-bias Voltage*	V_{RMON}	—	3	5	10	V
Monitor Current	I_{RMON}	P_{OL} = 1 mW (CW)	0.1	0.3	1.5	mA
Monitor Dark Current	I_D	I_F = 0, V_{RMON} = 5 V	—	0.01	0.1	µA
Input Impedance	Z_{IN}	—	—	25	—	Ω
Thermistor Current	I_{TC}	—	10	—	100	µA
Resistance Ratio†	—	—	9.1	—	9.6	—
Thermistor Resistance	R_{TH}	T_L = 25 °C	9.5	—	10.5	kΩ
TEC Current	I_{TEC}	T_L = 25 °C, T_C = 70 °C	—	0.6	1.0	A
TEC Voltage	V_{TEC}	T_L = 25 °C, T_C = 70°C	—	1.3	2.0	V
TEC Capacity	ΔT	T_C = 70 °C	—	—	50	°C

* Standard operating condition is 5.0 V reverse bias.
† Ratio of thermistor resistance at 0 °C to thermistor resistance at 50 °C.

Table 2. Optical Characteristics (at 25 °C laser temperature)

Parameter	Symbol	Test Conditions	Min	Typ	Max	Unit
Peak Optical Output Power	P_{PEAK}	—	2.0	—	—	mW
Center Wavelength (See Table 10.)	λc	T_L = 25 °C CW wavelength	1528.77	—	1610.06	nm
Line Width (3 dB full width)	$\Delta\lambda$	Modulated at 2.5 Gbits/s at rated power	—	2	10	MHz
Side-mode Suppression Ratio	SMSR	CW	30	—	—	dB
Optical Isolation	—	T_C = 0 °C to 70 °C	30	—	—	dB
Wavelength Drift (EOL)	$\Delta\lambda$	Tested over 25-year lifetime	—	—	±0.1	nm
Center Wavelength Drift with Case Temperature	$\Delta\lambda c/\Delta T_C$	0 °C ≤ T_C ≤ 70 °C	—	—	1	pm/°C
Wavelength Temperature Tuning Coefficient	—	—	—	0.095	—	nm/°C
Tracking Error	—	T_C = –20 °C/25 °C/70 °C	—	—	1	dB

Table 3. Dispersion Performance

Parameter	Symbol	Test Conditions	Min	Typ	Max	Unit
Dispersion Penalty for Extended Reach	DP	1800 ps/nm	—	—	2.0	dB

D2555 Characteristics

Minimum and maximum values are testing requirements. Typical values are characteristics of the device and are the result of engineering evaluations. Typical values are for information purposes only and are not part of the testing requirements.

Table 4. Electrical Characteristics (at 25 °C laser temperature)

Parameter	Symbol	Test Conditions	Min	Typ	Max	Unit
Slope Efficiency	η	L_F = 2 mW (CW)	0.05	0.08	0.10	mW/mA
Threshold Current	I_{TH}	—	—	12	35	mA
Laser Forward Voltage	V_{LF}	L_F = 2 mW (CW)	—	1.3	1.8	V
Laser Submount Temperature	T_{LASER}	—	20	—	30	°C
Monitor Reverse-bias Voltage*	V_{RMON}	—	3	5	10	V
Monitor Current	I_{RMON}	P_{OL} = 1 mW (CW)	0.1	0.3	1.9	mA
Monitor Dark Current	I_D	I_F = 0, V_{RMON} = 5 V	—	0.01	0.1	µA
Input Impedance	Z_{IN}	—	—	25	—	Ω
Thermistor Current	I_{TC}	—	10	—	100	µA
Resistance Ratio†	—	—	9.1	—	9.6	—
Thermistor Resistance	R_{TH}	T_L = 25 °C	9.5	—	10.5	kΩ
TEC Current	I_{TEC}	T_L = 25 °C, T_C = 70 °C	—	0.6	1.0	A
TEC Voltage	V_{TEC}	T_L = 25 °C, T_C = 70°C	—	1.3	2.0	V
TEC Capacity	ΔT	T_C = 70 °C	—	—	50	°C

* Standard operating condition is 5.0 V reverse bias.
† Ratio of thermistor resistance at 0 °C to thermistor resistance at 50 °C.

Table 5. Optical Characteristics (at 25 °C laser temperature)

Parameter	Symbol	Test Conditions	Min	Typ	Max	Unit
Peak Optical Output Power	P_{PEAK}	—	2.0	—	—	mW
Center Wavelength (See Table 11.)	λc	T_L = 25 °C CW wavelength	1528.77	—	1563.86	nm
Line Width (3 dB full width)	$\Delta\lambda$	Modulated at 2.5 Gbits/s at rated power	—	2	10	MHz
Side-mode Suppression Ratio	SMSR	CW	30	—	—	dB
Optical Isolation	—	T_C = 0 °C to 75 °C	30	—	—	dB
Wavelength Drift (EOL)	$\Delta\lambda$	Tested over 25-year lifetime	—	—	±0.1	nm
Center Wavelength Drift with Case Temperature	$\Delta\lambda c/\Delta T_C$	0 °C ≤ T_C ≤ 75 °C	—	—	1	pm/°C
Wavelength Temperature Tuning Coefficient	—	—	—	0.095	—	nm/°C
Tracking Error	—	T_C = –20 °C/25 °C/70 °C	—	—	1	dB

Table 6. Dispersion Performance

Parameter	Symbol	Test Conditions	Min	Typ	Max	Unit
Dispersion Penalty for Extended Reach	DP	3000 ps/nm	—	—	2.0	dB

D2570 Characteristics

Minimum and maximum values are testing requirements. Typical values are characteristics of the device and are the result of engineering evaluations. Typical values are for information purposes only and are not part of the testing requirements.

Table 7. Electrical Characteristics (at 25 °C laser temperature)

Parameter	Symbol	Test Conditions	Min	Typ	Max	Unit
Slope Efficiency	η	L_F = 10 mW (CW)	0.12	0.15	0.2	mW/mA
Threshold Current	I_{TH}	—	—	14	25	mA
Laser Forward Voltage	V_{LF}	L_F = 10 mW (CW)	—	1.3	1.8	V
Laser Submount Temperature	T_{LASER}	—	20	—	30	°C
Monitor Reverse-bias Voltage*	V_{RMON}	—	3	5	10	V
Monitor Current	I_{RMON}	P_{OL} = 5 mW (CW)	0.25	0.7	1.25	mA
Monitor Dark Current	I_D	I_F = 0, V_{RMON} = 5 V	—	0.01	0.1	µA
Input Impedance	Z_{IN}	—	—	25	—	Ω
Thermistor Current	I_{TC}	—	10	—	100	µA
Resistance Ratio†	—	—	9.1	—	9.6	—
Thermistor Resistance	R_{TH}	T_L = 25 °C	9.5	—	10.5	kΩ
TEC Current	I_{TEC}	T_L = 25 °C, T_C = 70 °C	—	0.6	1.0	A
TEC Voltage	V_{TEC}	T_L = 25 °C, T_C = 70°C	—	1.3	2.0	V
TEC Capacity	ΔT	T_C = 70 °C	—	—	50	°C

* Standard operating condition is 5.0 V reverse bias.
† Ratio of thermistor resistance at 0 °C to thermistor resistance at 50 °C.

Table 8. Optical Characteristics (at 25 °C laser temperature)

Parameter	Symbol	Test Conditions	Min	Typ	Max	Unit
Peak Optical Output Power	P_{PEAK}	—	10	—	—	mW
Center Wavelength (See Table 12.)	λc	T_L = 25 °C CW wavelength	1528.77	—	1610.06	nm
Line Width (3 dB full width)	$\Delta\lambda$	Modulated at 2.5 Gbits/s at rated power	—	2	10	MHz
Side-mode Suppression Ratio	SMSR	CW	30	—	—	dB
Optical Isolation	—	T_C = 0 °C to 70 °C	30	—	—	dB
Wavelength Drift (EOL)	$\Delta\lambda$	Tested over 25-year lifetime	—	—	±0.1	nm
Center Wavelength Drift with Case Temperature	$\Delta\lambda c/\Delta T_C$	0 °C ≤ T_C ≤ 70 °C	—	—	1	pm/°C
Wavelength Temperature Tuning Coefficient	—	—	—	0.095	—	nm/°C
Tracking Error	—	T_C = –20 °C/25 °C/70 °C	—	—	1	dB

Table 9. Dispersion Performance

Parameter	Symbol	Test Conditions	Min	Typ	Max	Unit
Dispersion Penalty for Extended Reach	DP	1800 ps/nm	—	—	2.5	dB

Outline Drawings

Dimensions are in inches and (millimeters).

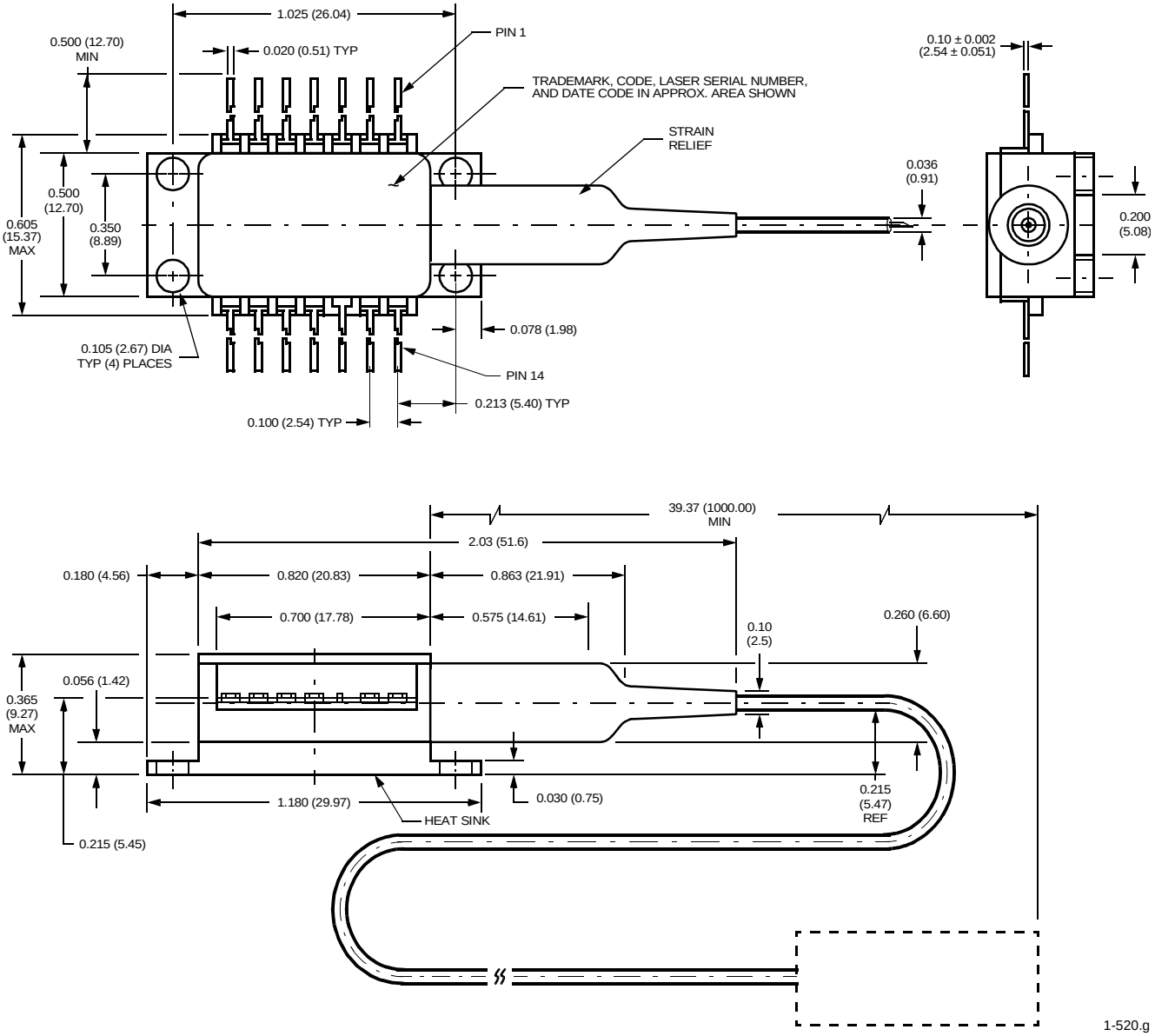

Ordering Information

Table 10. Ordering Information D2526G (FC-PC Connector)

Device Code	ITU Freq. (THz)	Center Wavelength (nm)	Comcode	Device Code	ITU Freq. (THz)	Center Wavelength (nm)	Comcode
D2526G61	196.1	1528.77	108221599	D2526G19	191.9	1562.23	108003260
D2526G60	196.0	1529.55	108221581	D2526G18	191.8	1563.05	108221540
D2526G59	195.9	1530.33	108221573	D2526G17	191.7	1563.86	108221532
D2526G58	195.8	1531.12	108221565	D2526G916	191.6	1564.68	108512526
D2526G57	195.7	1531.90	108221557	D2526G915	191.5	1565.50	108512518
D2526G56	195.6	1532.68	108003658	D2526G914	191.4	1566.31	108479858
D2526G55	195.5	1533.47	108003641	D2526G913	191.3	1567.13	108479841
D2526G54	195.4	1534.25	108003633	D2526G912	191.2	1567.95	108479833
D2526G53	195.3	1535.04	108003625	D2526G911	191.1	1568.77	108479825
D2526G52	195.2	1535.82	108003617	D2526G910	191.0	1569.59	108479817
D2526G51	195.1	1536.61	108003609	D2526G909	190.9	1570.42	108479809
D2526G50	195.0	1537.40	108003591	D2526G908	190.8	1571.24	108480369
D2526G49	194.9	1538.19	108003583	D2526G907	190.7	1572.06	108480351
D2526G48	194.8	1538.98	108003575	D2526G906	190.6	1572.89	108480344
D2526G47	194.7	1539.77	108003567	D2526G905	190.5	1573.71	108479791
D2526G46	194.6	1540.56	108003559	D2526G904	190.4	1574.54	108479783
D2526G45	194.5	1541.35	108003542	D2526G903	190.3	1575.37	108479775
D2526G44	194.4	1542.14	108003534	D2526G902	190.2	1576.20	108479767
D2526G43	194.3	1542.94	108003526	D2526G901	190.1	1577.02	108479759
D2526G42	194.2	1543.73	108003518	D2526G900	190.0	1577.85	108479742
D2526G41	194.1	1544.53	108003500	D2526G899	189.9	1578.69	108480336
D2526G40	194.0	1545.32	108003492	D2526G898	189.8	1579.52	108479734
D2526G39	193.9	1546.12	108003484	D2526G897	189.7	1580.35	108479700
D2526G38	193.8	1546.92	108003476	D2526G896	189.6	1581.18	108479692
D2526G37	193.7	1547.72	108003468	D2526G895	189.5	1582.02	108479684
D2526G36	193.6	1548.51	108003450	D2526G894	189.4	1582.85	108479676
D2526G35	193.5	1549.32	108003443	D2526G893	189.3	1583.69	108479668
D2526G34	193.4	1550.12	108003435	D2526G892	189.2	1584.53	108479650
D2526G33	193.3	1550.92	108003427	D2526G891	189.1	1585.36	108479643
D2526G32	193.2	1551.72	108003419	D2526G890	189.0	1586.20	108479635
D2526G31	193.1	1552.52	108003385	D2526G889	188.9	1587.04	108479627
D2526G30	193.0	1553.33	108003377	D2526G888	188.8	1587.88	108479619
D2526G29	192.9	1554.13	108003369	D2526G887	188.7	1588.72	108479601
D2526G28	192.8	1554.94	108003351	D2526G886	188.6	1589.57	108479585
D2526G27	192.7	1555.75	108003344	D2526G885	188.5	1590.41	108479577
D2526G26	192.6	1556.55	108003336	D2526G884	188.4	1591.25	108479569
D2526G25	192.5	1557.36	108003328	D2526G883	188.3	1592.10	108479551
D2526G24	192.4	1558.17	108003310	D2526G882	188.2	1592.95	108479544
D2526G23	192.3	1558.98	108003302	D2526G881	188.1	1593.79	108479536
D2526G22	192.2	1559.79	108003294	D2526G880	188.0	1594.64	108479528
D2526G21	192.1	1560.61	108003286	D2526G879	187.9	1595.49	108479510

Ordering Information (continued)

Table 10. Ordering Information D2526G (FC-PC Connector) (continued)

Device Code	ITU Freq. (THz)	Center Wavelength (nm)	Comcode	Device Code	ITU Freq. (THz)	Center Wavelength (nm)	Comcode
D2526G20	192.0	1561.42	108003278	D2526G878	187.8	1596.34	108479502
D2526G877	187.7	1597.19	108479494	D2526G869	186.9	1604.33	108578220
D2526G876	187.6	1598.04	108479486	D2526G868	186.8	1604.88	108578204
D2526G875	187.5	1598.89	108479478	D2526G867	186.7	1605.74	108578196
D2526G874	187.4	1599.75	108479460	D2526G866	186.6	1606.60	108578188
D2526G873	187.3	1600.60	108479452	D2526G865	186.5	1607.47	108578162
D2526G872	187.2	1601.45	108479445	D2526G864	186.4	1608.33	108578154
D2526G871	187.1	1602.31	108479437	D2526G863	186.3	1609.19	108578105
D2526G870	187.0	1603.17	108578246	D2526G862	186.2	1610.06	108578097

Table 11. Ordering Information D2555G (FC-PC Connector)

Device Code	ITU Freq. (THz)	Center Wavelength (nm)	Comcode	Device Code	ITU Freq. (THz)	Center Wavelength (nm)	Comcode
D2555G61	196.1	1528.77	108309113	D2555G38	193.8	1546.92	108167008
D2555G60	196.0	1529.55	108309105	D2555G37	193.7	1547.72	108166992
D2555G59	195.9	1530.33	108309089	D2555G36	193.6	1548.51	108166984
D2555G58	195.8	1531.12	108309071	D2555G35	193.5	1549.32	108166976
D2555G57	195.7	1531.90	108309063	D2555G34	193.4	1550.12	108166968
D2555G56	195.6	1532.68	108167180	D2555G33	193.3	1550.92	108166950
D2555G55	195.5	1533.47	108167172	D2555G32	193.2	1551.72	108166943
D2555G54	195.4	1534.25	108167164	D2555G31	193.1	1552.52	108166935
D2555G53	195.3	1535.04	108167156	D2555G30	193.0	1553.33	108166927
D2555G52	195.2	1535.82	108167149	D2555G29	192.9	1554.13	108166877
D2555G51	195.1	1536.61	108167131	D2555G28	192.8	1554.94	108166851
D2555G50	195.0	1537.40	108167123	D2555G27	192.7	1555.75	108166836
D2555G49	194.9	1538.19	108167115	D2555G26	192.6	1556.55	108166810
D2555G48	194.8	1538.98	108167107	D2555G25	192.5	1557.36	108166794
D2555G47	194.7	1539.77	108167099	D2555G24	192.4	1558.17	108166786
D2555G46	194.6	1540.56	108167081	D2555G23	192.3	1558.98	108166760
D2555G45	194.5	1541.35	108167073	D2555G22	192.2	1559.79	108166745
D2555G44	194.4	1542.14	108167065	D2555G21	192.1	1560.61	108166737
D2555G43	194.3	1542.94	108167057	D2555G20	192.0	1561.42	108166695
D2555G42	194.2	1543.73	108167040	D2555G19	191.9	1562.23	108166687
D2555G41	194.1	1544.53	108167032	D2555G18	191.8	1563.05	108309972
D2555G40	194.0	1545.32	108167024	D2555G17	191.7	1563.86	108309964
D2555G39	193.9	1546.12	108167016				

Ordering Information (continued)

Table 12. Ordering Information D2570H (*ST*® Ferrule)

Device Code	ITU Freq. (THz)	Center Wavelength (nm)	Comcode	Device Code	ITU Freq. (THz)	Center Wavelength (nm)	Comcode
D2570H61	196.1	1528.77	108278425	D2570H18	191.8	1563.05	108277369
D2570H60	196.0	1529.55	108278417	D2570H17	191.7	1563.86	108277351
D2570H59	195.9	1530.33	108278409	D2570H916	191.6	1564.68	108512500
D2570H58	195.8	1531.12	108278391	D2570H915	191.5	1565.50	108512492
D2570H57	195.7	1531.90	108278383	D2570H914	191.4	1566.31	108488149
D2570H56	195.6	1532.68	108277914	D2570H913	191.3	1567.13	108488131
D2570H55	195.5	1533.47	108277500	D2570H912	191.2	1567.95	108488123
D2570H54	195.4	1534.25	108277492	D2570H911	191.1	1568.77	108488115
D2570H53	195.3	1535.04	108277484	D2570H910	191.0	1569.59	108488107
D2570H52	195.2	1535.82	108277476	D2570H909	190.9	1570.42	108488099
D2570H51	195.1	1536.61	108277468	D2570H908	190.8	1571.24	108488081
D2570H50	195.0	1537.40	108277450	D2570H907	190.7	1572.06	108488073
D2570H49	194.9	1538.19	108277443	D2570H906	190.6	1572.89	108488065
D2570H48	194.8	1538.98	108277435	D2570H905	190.5	1573.71	108488057
D2570H47	194.7	1539.77	108277427	D2570H904	190.4	1574.54	108488040
D2570H46	194.6	1540.56	108277419	D2570H903	190.3	1575.37	108488032
D2570H45	194.5	1541.35	108277393	D2570H902	190.2	1576.20	108488024
D2570H44	194.4	1542.14	108177924	D2570H901	190.1	1577.02	108488016
D2570H43	194.3	1542.94	108177916	D2570H900	190.0	1577.85	108488008
D2570H42	194.2	1543.73	108177908	D2570H899	189.9	1578.69	108487992
D2570H41	194.1	1544.53	108177890	D2570H898	189.8	1579.52	108487984
D2570H40	194.0	1545.32	108177882	D2570H897	189.7	1580.35	108487976
D2570H39	193.9	1546.12	108177874	D2570H896	189.6	1581.18	108487968
D2570H38	193.8	1546.92	108177866	D2570H895	189.5	1582.02	108487950
D2570H37	193.7	1547.72	108177858	D2570H894	189.4	1582.85	108487943
D2570H36	193.6	1548.51	108177841	D2570H893	189.3	1583.69	108487935
D2570H35	193.5	1549.32	108177833	D2570H892	189.2	1584.53	108487927
D2570H34	193.4	1550.12	108177153	D2570H891	189.1	1585.36	108487919
D2570H33	193.3	1550.92	108177825	D2570H890	189.0	1586.20	108487901
D2570H32	193.2	1551.72	108177809	D2570H889	188.9	1587.04	108487893
D2570H31	193.1	1552.52	108177791	D2570H888	188.8	1587.88	108487885
D2570H30	193.0	1553.33	108177783	D2570H887	188.7	1588.72	108487877
D2570H29	192.9	1554.13	108177767	D2570H886	188.6	1589.57	108487869
D2570H28	192.8	1554.94	108177759	D2570H885	188.5	1590.41	108487851
D2570H27	192.7	1555.75	108177742	D2570H884	188.4	1591.25	108487844
D2570H26	192.6	1556.55	108177734	D2570H883	188.3	1592.10	108487836
D2570H25	192.5	1557.36	108177726	D2570H882	188.2	1592.95	108487828
D2570H24	192.4	1558.17	108177718	D2570H881	188.1	1593.79	108487810
D2570H23	192.3	1558.98	108177700	D2570H880	188.0	1594.64	108487802
D2570H22	192.2	1559.79	108177692	D2570H879	187.9	1595.49	108487794
D2570H21	192.1	1560.61	108177684	D2570H878	187.8	1596.34	108487786
D2570H20	192.0	1561.42	108277385	D2570H877	187.7	1597.19	108487778
D2570H19	191.9	1562.23	108277377	D2570H876	187.6	1598.04	108487760

Ordering Information (continued)

Table 12. Ordering Information D2570H (*ST* Ferrule) (continued)

Device Code	ITU Freq. (THz)	Center Wavelength (nm)	Comcode	Device Code	ITU Freq. (THz)	Center Wavelength (nm)	Comcode
D2570H875	187.5	1598.89	108487752	D2570H868	186.8	1604.88	108578634
D2570H874	187.4	1599.75	108487745	D2570H867	186.7	1605.74	108578618
D2570H873	187.3	1600.60	108487737	D2570H866	186.6	1606.60	108578469
D2570H872	187.2	1601.45	108487729	D2570H865	186.5	1607.47	108578428
D2570H871	187.1	1602.31	108487711	D2570H864	186.4	1608.33	108578410
D2570H870	187.0	1603.17	108578659	D2570H863	186.3	1609.19	108578402
D2570H869	186.9	1604.33	108578642	D2570H862	186.2	1610.06	108578394

Laser Safety Information

Class IIIb Laser Product

FDA/CDRH Class IIIb laser product. All versions are Class IIIb laser products per CDRH, 21 CFR 1040 Laser Safety requirements. The device has been classified with the FDA under accession number 8720010.

This product complies with 21 CFR 1040.10 and 1040.11.
8.3 µm/125 µm single-mode fiber pigtail with 900 µm tight buffer jacket and connector
Wavelength = 1.5 µm
Maximum power = 40 mW
Because of size constraints, laser safety labeling (including an FDA Class IIIb label) is not affixed to the module but attached to the outside of the shipping carton.
Product is not shipped with power supply.

Caution: Use of controls, adjustments, and procedures other than those specified herein may result in hazardous laser radiation exposure.

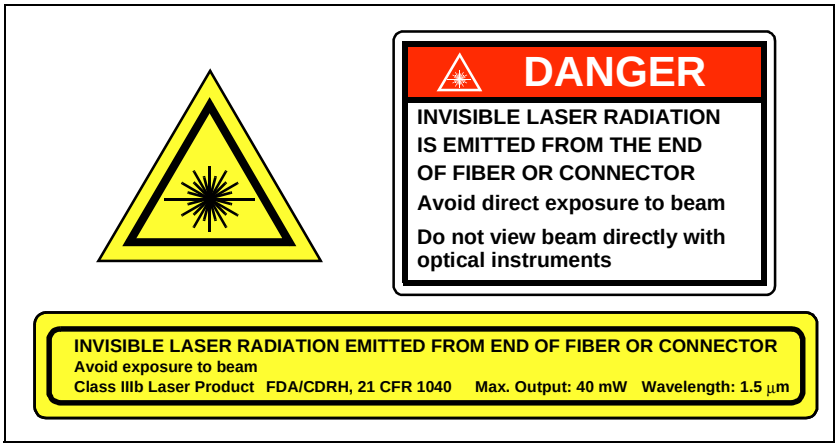

For additional information, contact your Agere Systems Account Manager or the following:
INTERNET: **http://www.agere.com**
E-MAIL: **docmaster@agere.com**
N. AMERICA: Agere Systems Inc., 555 Union Boulevard, Room 30L-15P-BA, Allentown, PA 18109-3286
1-800-372-2447, FAX 610-712-4106 (In CANADA: **1-800-553-2448**, FAX 610-712-4106)
ASIA PACIFIC: Agere Systems Singapore Pte. Ltd., 77 Science Park Drive, #03-18 Cintech III, Singapore 118256
Tel. (65) 778 8833, FAX (65) 777 7495
CHINA: Agere Systems (Shanghai) Co., Ltd., 33/F Jin Mao Tower, 88 Century Boulevard Pudong, Shanghai 200121 PRC
Tel. (86) 21 50471212, FAX (86) 21 50472266
JAPAN: Agere Systems Japan Ltd., 7-18, Higashi-Gotanda 2-chome, Shinagawa-ku, Tokyo 141, Japan
Tel. (81) 3 5421 1600, FAX (81) 3 5421 1700
EUROPE: Data Requests: DATALINE: **Tel. (44) 7000 582 368**, FAX (44) 1189 328 148
Technical Inquiries: OPTOELECTRONICS MARKETING: **(44) 1344 865 900** (Ascot UK)

Agere Systems Inc. reserves the right to make changes to the product(s) or information contained herein without notice. No liability is assumed as a result of their use or application.
ST is a registered trademark of Agere Systems Inc.

Copyright © 2001 Agere Systems Inc.
All Rights Reserved

July 2001
DS00-165OPTO-3 (Replaces DS00-165OPTO-2)

О компании

ООО "ТрейдЭлектроникс" - это оперативные поставки широкого спектра электронных компонентов отечественного и импортного производства напрямую от производителей и с крупнейших мировых складов. Реализуемая нашей компанией продукция насчитывает более полумиллиона наименований.

Благодаря этому наша компания предлагает к поставке практически не ограниченный ассортимент компонентов как оптовыми, мелкооптовыми партиями, так и в розницу.

Наличие собственной эффективной системы логистики обеспечивает надежную поставку продукции по конкурентным ценам в точно указанные сроки.

Срок поставки со стоков в **Европе и Америке – от 3 до 14 дней.**

Срок поставки из **Азии – от 10 дней.**

Благодаря развитой сети поставщиков, помогаем в поиске и приобретении экзотичных или снятых с производства компонентов.

Предоставляем спец цены на элементы для создания инженерных сэмплов.

Упорный труд, качественный результат дают нам право быть уверенными в себе и надежными для наших клиентов.

Наша компания это:

- Гарантия качества поставляемой продукции
- Широкий ассортимент
- Минимальные сроки поставок
- Техническая поддержка
- Подбор комплектации
- Индивидуальный подход
- Гибкое ценообразование

Наша организация особенно сильна в поставках модулей, микросхем, пассивных компонентов, ксайленсах (XC), EPF, EPM и силовой электроники.

Большой выбор предлагаемой продукции, различные виды оплаты и доставки, позволят Вам сэкономить время и получить максимум выгоды от сотрудничества с нами!

Trade Electronics.ru

гарантия бесперебойности производства и качества выпускаемой продукции

Перечень производителей, продукцию которых мы поставляем на российский рынок

AMD
ANALOG DEVICES
BOURNS
Coilcraft
élantec Semiconductor, Inc.
HARRIS
Infineon
JRC
MICREL
MOTOROLA
nichicon
PHILIPS
ROHM
SGS-THOMSON
Sipex
TAIYO YUDEN
TOKO
ZILOG
Winbond
Allegro
ATMEL
BURR - BROWN
EXAR
HITACHI
intel
Lattice
muRata
OKI
QUALCOMM
SAMSUNG
SHARP
SONY
TDK
TOSHIBA
KYOCERA
ALTERA
AVX
CITILYST
CYPRESS
FAIRCHILD SEMICONDUCTOR
HOLTEK
International IOR Rectifier
LINEAR TECHNOLOGY
MITSUBISHI
National Semiconductor
ON Semiconductor
REALTEK
SANYO
SHINDENGEN
SGS
TECCOR
TUNDRA
XILINX
Amphenol
Bay Linear
CIRRUS LOGIC
DALLAS
FUJITSU
IDT
intersil
MAXIM
molex
NEC
Panasonic
RENESAS
SII
SIEMENS
ST
Texas Instruments
VISHAY
ZETEX SEMICONDUCTORS

Trade Electronics.ru

гарантия бесперебойности производства и качества выпускаемой продукции

С удовольствием будем прорабатывать для Вас поставки всех необходимых компонентов по текущим запросам для скорейшего выявления групп элементов, по которым сотрудничество именно с нашей компанией будет для Вас максимально выгодным!

С уважением,

Менеджер отдела продаж ООО

«Трейд Электроникс»

Шишлаков Евгений

8 (495)668-30-28 доб 169

manager28@tradeelectronics.ru

http://www.tradeelectronics.ru/