CY2DP818

1:8 Clock Fanout Buffer

Features

- Low-voltage operation V_{DD} = 3.3 V
- 1:8 fanout
- Operation to 350 MHz
- Single input configurable for LVDS, LVPECL, or LVTTL
- 8 pair of LVPECL outputs
- Drives a 50 ohm load
- Low input capacitance
- Low output skew
- Low propagation delay (tpd = 4 ns, typical)
- Commercial and Industrial temperature ranges
- 38-pin TSSOP Package

Description

The Cypress CY2DP818 fanout buffer features a single LVDS or a single ended LVTTL compatible input and eight LVPECL output pairs.

Designed for data-communications clock management applications, the large fanout from a single input reduces loading on the input clock.

The CY2DP818 is ideal for both level translations from single ended to LVPECL and/or for the distribution of LVPECL based clock signals.

The Cypress CY2DP818 has configurable input functions. The input is user configurable via the InConfig pin for single ended or differential input.

Logic Block Diagram

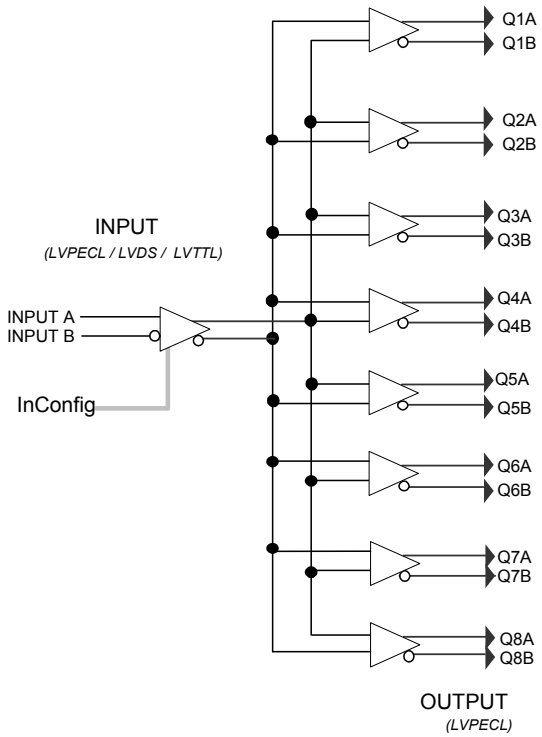

Contents

Pin Configuration **3**
Pin Description **3**
Maximum Ratings **5**
DC Electrical Specifications **6**
AC Switching Characteristics **7**
Ordering Information **9**
Ordering Code Definitions 9
Package Drawing and Dimensions **10**
Acronyms **11**
Document Conventions **11**
Units of Measure 11
Document History Page **12**
Sales, Solutions, and Legal Information **13**
Worldwide Sales and Design Support 13
Products 13
PSoC Solutions 13

Pin Configuration

Figure 1. 38-pin TSSOP pinout

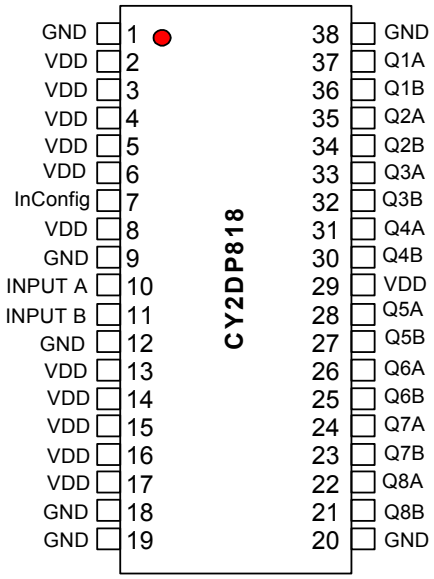

Pin Description

Pin Number	Pin Name	Type	Description
1, 9, 12, 18, 19, 20, 38	GND	POWER	Ground
2, 3, 4, 5, 6, 8, 13, 14, 15, 16, 17, 29	VDD	POWER	Power Supply
10, 11	Input A, Input B	Default: LVPECL/LDVS Optional: LVTTL/LVCMOS single pin	Clock Input. Either differential LVPECL/LVDS or single-ended LVTTL/LVCMOS, as determined by InConfig. See Table 1 and Table 2 for details.
37, 36, 35, 34, 33, 32, 31, 30, 28, 27, 26, 25, 24, 23, 22, 21	Q1(A,B), Q2(A,B), Q3(A,B), Q4(A,B), Q5(A,B), Q6(A,B), Q7(A,B), Q8(A,B)	LVPECL	Differential Output Clocks
7	InConfig	LVTTL/LVCMOS	Control Input. Selects input type: either differential LVPECL/LVDS or single-ended LVTTL/LVCMOS. See Table 1 and Table 2 for details.

Table 1. Input Receiver Configuration for Differential or LVTTL/LVCMOS

InConfig (Pin 7)	Input Receiver Family	Input Receiver Type
1	LVTTL or LVCMOS	Single ended, non-inverting or inverting, void of bias resistors
0	LVDS or LVPECL	Differential, void of internal termination

Table 2. Single ended LVTTL/LVCMOS Input Logic (InConfig = 1)

Input A (+) Pin 10	Input B (–) Pin 11	Output Clock QnA Pins
Input	Ground	True
Input	VDD	Invert
Ground	Input	Invert
VDD	Input	True

Maximum Ratings

Exceeding maximum ratings [1] may shorten the useful life of the device. These user guidelines are not tested.

Storage Temperature: ..... –65 °C to +150 °C

Ambient Temperature: ..... –40 °C to +85 °C

Supply Voltage to Ground Potential (Inputs and V_{DD} only) .....–0.3 V to 4.6 V

Supply Voltage to Ground Potential (Outputs only) ..... –0.3 V to V_{DD} + 0.3 V

DC Input Voltage ..... –0.3 V to V_{DD} + 0.3 V

DC Output Voltage ..... –0.3 V to V_{DD} + 0.9 V

Power Dissipation ..... 0.75 W

Table 3. Power Supply Characteristics

Parameter	Description	Test Conditions	Min	Typ	Max	Unit
I_{CC}	Dynamic Power Supply Current	V_{DD} = Max Input toggling 50% Duty Cycle, Outputs Open	–	1.5	2.0	mA
I_C	Total Power Supply Current	V_{DD} = Max Input toggling 50% Duty Cycle, Outputs 50 ohms f_L = 100 MHz	–	–	350	mA
$I_{C(Core)}$	Core current when output loads are disabled	V_{DD} = Max Input toggling 50% Duty Cycle, Outputs not connected to VTT f_L = 100 MHz	–	–	50	mA

Note

1. Stresses greater than those listed under absolute maximum ratings may cause permanent damage to the device. This is intended to be a stress rating only and functional operation of the device at these or any other conditions above those indicated in the operation sections of this specification is not implied. Exposure to absolute maximum rating conditions for extended periods may affect reliability.

DC Electrical Specifications

Table 4. LVDS Input, V_{DD} = 3.3 V ± 5%, T_A = 0 °C to 70 °C or –40 °C to 85 °C

Parameter	Description	Conditions	Min	Typ	Max	Unit
V_{ID}	Magnitude of Differential Input Voltage		100	–	600	mV
V_{IC}	Common-mode of Differential Input Voltage$\lvert V_{ID} \rvert$ (min and max)		IVIDI/2	2.4–(IVIDI/2)		V
V_{IH}	Input High Voltage	Guaranteed Logic High Level	2	–	–	V
V_{IL}	Input Low Voltage	Guaranteed Logic Low Level	–	–	0.8	V
I_{IH}	Input High Current	V_{DD} = Max, V_{IN} = V_{DD}	–	±10	±20	µA
I_{IL}	Input Low Current	V_{DD} = Max, V_{IN} = V_{SS}	–	±10	±20	µA

Table 5. LVPECL Input, V_{DD} = 3.3 V ± 5%, T_A = 0 °C to 70 °C or –40 °C to 85 °C

Parameter	Description	Conditions	Min	Typ	Max	Unit
V_{ID}	Differential Input Voltage p-p	Guaranteed Logic High Level	400	–	2600	mV
V_{IH}	Input High Voltage	Guaranteed Logic High Level	2.15	–	2.4	V
V_{IL}	Input Low Voltage	Guaranteed Logic Low Level	1.5	–	1.8	V
I_{IH}	Input High Current	V_{DD} = Max, V_{IN} = V_{DD}	–	±10	±20	µA
I_{IL}	Input Low Current	V_{DD} = Max, V_{IN} = V_{SS}	–	±10	±20	µA
V_{CM}	Common-mode Voltage		–	–	225	mV

Table 6. LVTTL/LVCMOS Input, V_{DD} = 3.3 V ± 5%, T_A = 0 °C to 70 °C or –40 °C to 85 °C

Parameter	Description	Conditions	Min	Typ	Max	Unit
V_{IH}	Input High Voltage		2	–	–	V
V_{IL}	Input Low Voltage		–	–	0.8	V
I_{IH}	Input High Current	V_{DD} = Max, V_{IN} = 2.7 V	–	–	1	µA
I_{IL}	Input Low Current	V_{DD} = Max, V_{IN} = 0.5 V	–	–	–1	µA
I_I	Input High Current	V_{DD} = Max, V_{IN} = $V_{DD(Max)}$	–	–	20	µA
V_{IK}	Clamp Diode Voltage	V_{DD} = Min, I_{IN} = –18 mA	–	–0.7	–1.2	V
V_H	Input Hysteresis		–	80	–	mV

Table 7. LVPECL Output, V_{DD} = 3.3 V ± 5%, T_A = 0 °C to 70 °C or –40 °C to 85 °C

Parameter	Description	Conditions	Min	Typ	Max	Unit
V_{OD}	Driver Differential Output voltage p-p	V_{DD} = Min, V_{IN} = V_{IH} or V_{IL}, R_L = 50 Ω	1000	–	3600	mV
V_{OC}	Driver common-mode p-p	V_{DD} = Min, V_{IN} = V_{IH} or V_{IL}, R_L = 50 Ω	–	–	300	mV
t_R	Rise Time	Differential 20% to 80%, C_L = 10 pF to GND, R_L = 50 Ω to GND	300	–	1200	ps
t_F	Fall Time					
V_{OH}	Output High Voltage	V_{DD} = Min, V_{IN} = V_{IH} or V_{IL}, I_{OH} = –12 mA	2.1	–	3.0	V
V_{OL}[2]	Output Low Voltage	V_{DD} = Min, V_{IN} = V_{IH} or V_{IL}	0.8	–	1.3	V
I_{OS}	Short Circuit Current	V_{DD} = Max, V_{OUT} = GND	–125	–	–150	mA

AC Switching Characteristics

Table 8. V_{DD} = 3.3 V ± 5%, T_A = 0 °C to 70 °C or –40 °C to 85 °C

Parameter	Description	Conditions	Min	Typ	Max	Unit
t_{PLH}	Propagation Delay – Low to High	V_{ID} = 100 mV	3	4	5	ns
t_{PHL}	Propagation Delay – High to Low	V_{ID} = 100 mV	3	4	5	ns
$t_{SK(0)}$	Output Skew: Skew between outputs of the same package (in phase)		–	–	0.2	ns
$t_{SK(p)}$	Pulse Skew: Skew between opposite transitions of the same output (t_{PHL}–t_{PLH})		–	0.2	–	ns
$t_{SK(t)}$	Package Skew: Skew between outputs of different packages at the same power supply voltage, temperature and package type. Same input signal level and output load.	V_{ID} = 100 mV	–	–	1	ns

Table 9. High frequency Parametrics

Parameter	Description	Conditions	Min	Typ	Max	Unit
Fmax	Maximum frequency V_{DD} = 3.3 V	45%–55% duty cycle Standard load circuit	–	–	350	MHz

Note
2. V_{OL} levels are dependent on the termination voltage V_{TT} and termination resistance R_{TT}. Changing either of these values will affect V_{OL}.

Figure 2. Driver Design

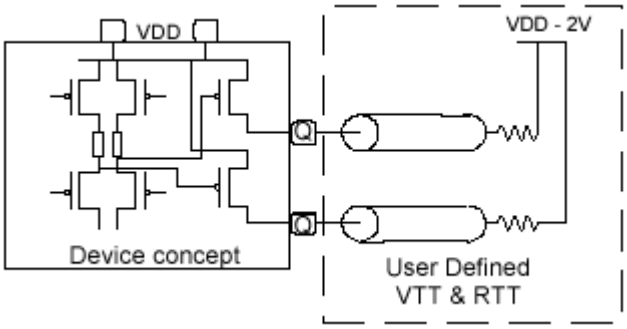

Figure 3. Standard Termination

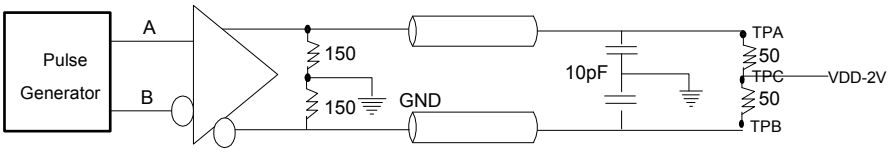

Figure 4. Differential Receiver to Driver Propagation Delay and Driver Transition Time[3,4,5,6]

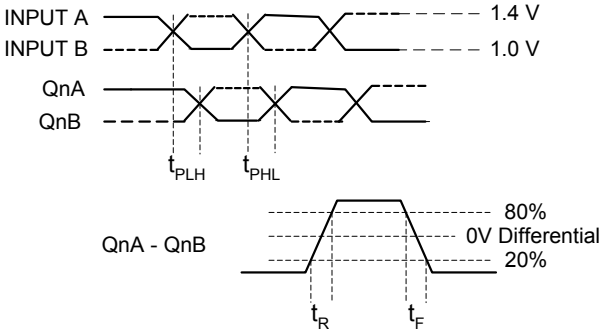

Figure 5. Test Circuit and Voltage Definitions for the Driver Common Mode Output Voltage [3, 4, 5, 6]

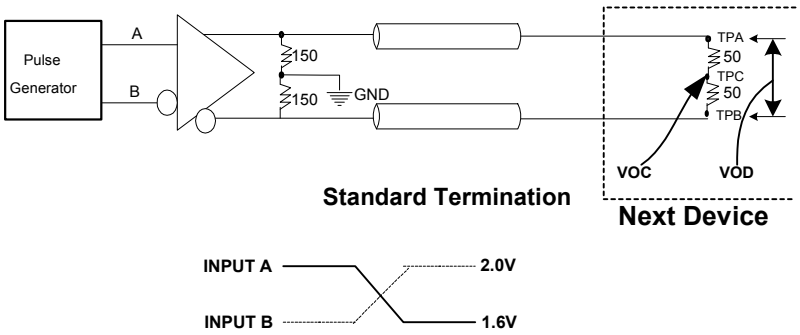

Notes

3. All input pulses are supplied by a frequency generator with the following characteristics: t_R and $t_F \leq 1$ ns; pulse rerate = 50 Mpps; pulse width = 10 ± 0.2 ns.
4. RL = 50 ohm ± 1%; Zline = 50 ohm 6".
5. CL includes instrumentation and fixture capacitance within 6 mm of the UT.
6. TPA and B are used for prop delay and Rise/Fall measurements. TPC is used for VOC measurements only and is otherwise connected to V_{DD} – 2V.

Ordering Information

Part Number	Package Type	Product Flow
Pb-free		
CY2DP818ZXI	38-pin TSSOP	Industrial, –40 °C to 85 °C
CY2DP818ZXC	38-pin TSSOP	Commercial, 0 °C to 70 °C

Ordering Code Definitions

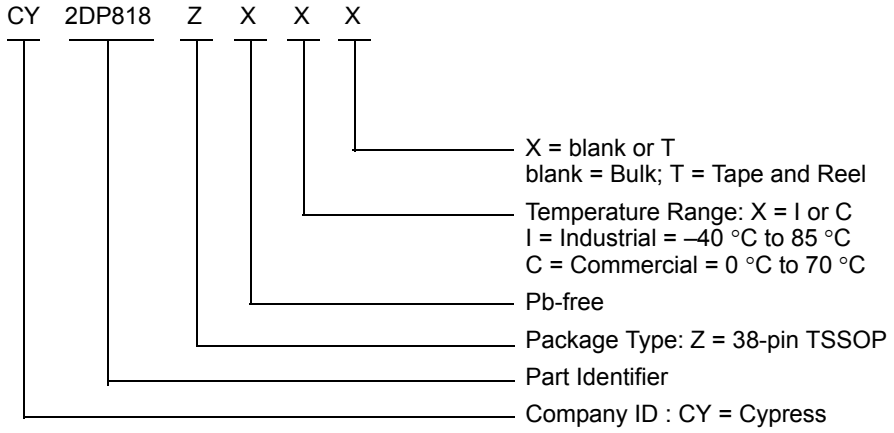

Package Drawing and Dimensions

Figure 6. 38-pin TSSOP (9.7 × 4.4 × 1.1 mm) Z3817 / ZZ3817 Package Outline, 51-85151

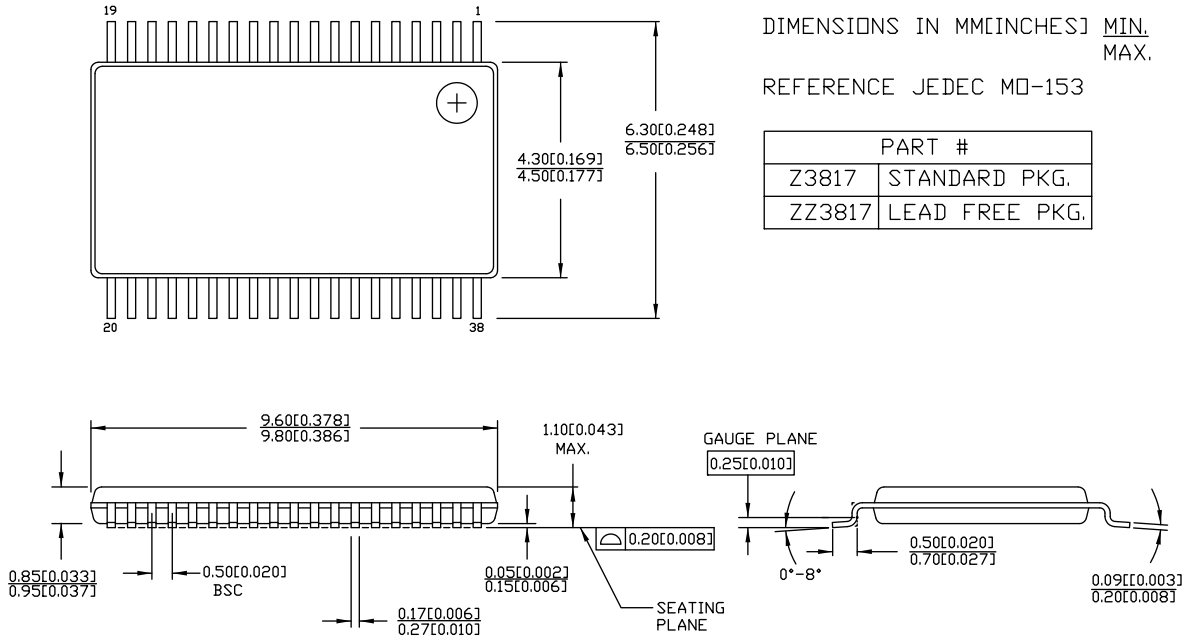

Acronyms

Acronym	Description
LVCMOS	low-voltage complementary metal oxide semiconductor
LVDS	low-voltage differential signaling
LVPECL	low-voltage pseudo (positive) emitter-coupled logic
LVTTL	low-voltage transistor-transistor logic
TSSOP	thin shrink small outline package

Document Conventions

Units of Measure

Symbol	Unit of Measure
°C	degree Celsius
MHz	megahertz
µA	microampere
mV	millivolt
ns	nanosecond
Ω	ohm
%	percent
pF	picofarad
ps	picosecond
V	volt
W	watt

Document History Page

Document Title: CY2DP818, 1:8 Clock Fanout Buffer Document Number: 38-07061				
Rev.	**ECN**	**Orig. of Change**	**Submission Date**	**Description of Change**
**	107086	06/07/01	IKA	New Data Sheet
*A	115913	07/11/02	CTK	IC, VCM, VOC, Rise/Fall Time Fmax (20)
*B	2748606	08/05/09	KVM	Deleted references to ComLink Minor edits to page 1 text Instances of VCC changed to VDD Changed table sequence to be more logical Edited Table 1 on page 4 and reformatted Table 2 on page 4 for clarity Added voltage and temperature specs to heading of all DC and AC tables Added commercial temp range to DC and AC table headings Clarified wording for IC Core Removed duplicate I_I (input high current) parameter from LVPECL & LVDS Removed T_{PE} and T_{PD} parameters from AC table Cleaned up waveform drawings Removed figures showing inputs for different InConfig values because Table 1 on page 4 and Table 2 on page 4 are more complete Updated Ordering Information (Added part numbers CY2DP818ZXC, CY2DP818ZXCT, CY2DP818ZXI and CY2DP818ZXIT to the ordering information table). Updated Package Drawing and Dimensions.
*C	2899846	KVM	03/26/10	Updated Ordering Information (Removed inactive parts in ordering information table). Updated Package Drawing and Dimensions.
*D	3717888	PURU	08/20/2012	Added Ordering Code Definitions. Updated Package Drawing and Dimensions (spec 51-85151 (Changed revision from *B to *C)). Added Acronyms and Units of Measure. Updated in new template.

Sales, Solutions, and Legal Information

Worldwide Sales and Design Support

Cypress maintains a worldwide network of offices, solution centers, manufacturer's representatives, and distributors. To find the office closest to you, visit us at Cypress Locations.

Products

Automotive	cypress.com/go/automotive
Clocks & Buffers	cypress.com/go/clocks
Interface	cypress.com/go/interface
Lighting & Power Control	cypress.com/go/powerpsoc cypress.com/go/plc
Memory	cypress.com/go/memory
PSoC	cypress.com/go/psoc
Touch Sensing	cypress.com/go/touch
USB Controllers	cypress.com/go/USB
Wireless/RF	cypress.com/go/wireless

PSoC Solutions

psoc.cypress.com/solutions

PSoC 1 | PSoC 3 | PSoC 5

© Cypress Semiconductor Corporation, 2001-2012. The information contained herein is subject to change without notice. Cypress Semiconductor Corporation assumes no responsibility for the use of any circuitry other than circuitry embodied in a Cypress product. Nor does it convey or imply any license under patent or other rights. Cypress products are not warranted nor intended to be used for medical, life support, life saving, critical control or safety applications, unless pursuant to an express written agreement with Cypress. Furthermore, Cypress does not authorize its products for use as critical components in life-support systems where a malfunction or failure may reasonably be expected to result in significant injury to the user. The inclusion of Cypress products in life-support systems application implies that the manufacturer assumes all risk of such use and in doing so indemnifies Cypress against all charges.

Any Source Code (software and/or firmware) is owned by Cypress Semiconductor Corporation (Cypress) and is protected by and subject to worldwide patent protection (United States and foreign), United States copyright laws and international treaty provisions. Cypress hereby grants to licensee a personal, non-exclusive, non-transferable license to copy, use, modify, create derivative works of, and compile the Cypress Source Code and derivative works for the sole purpose of creating custom software and or firmware in support of licensee product to be used only in conjunction with a Cypress integrated circuit as specified in the applicable agreement. Any reproduction, modification, translation, compilation, or representation of this Source Code except as specified above is prohibited without the express written permission of Cypress.

Disclaimer: CYPRESS MAKES NO WARRANTY OF ANY KIND, EXPRESS OR IMPLIED, WITH REGARD TO THIS MATERIAL, INCLUDING, BUT NOT LIMITED TO, THE IMPLIED WARRANTIES OF MERCHANTABILITY AND FITNESS FOR A PARTICULAR PURPOSE. Cypress reserves the right to make changes without further notice to the materials described herein. Cypress does not assume any liability arising out of the application or use of any product or circuit described herein. Cypress does not authorize its products for use as critical components in life-support systems where a malfunction or failure may reasonably be expected to result in significant injury to the user. The inclusion of Cypress' product in a life-support systems application implies that the manufacturer assumes all risk of such use and in doing so indemnifies Cypress against all charges.

Use may be limited by and subject to the applicable Cypress software license agreement.

PSoC Designer™ is a trademark and PSoC® and CapSense® are registered trademarks of Cypress Semiconductor Corporation. All products and company names mentioned in this document may be the trademarks of their respective holders.

О компании

ООО "ТрейдЭлектроникс" - это оперативные поставки широкого спектра электронных компонентов отечественного и импортного производства напрямую от производителей и с крупнейших мировых складов. Реализуемая нашей компанией продукция насчитывает более полумиллиона наименований.

Благодаря этому наша компания предлагает к поставке практически не ограниченный ассортимент компонентов как оптовыми, мелкооптовыми партиями, так и в розницу.

Наличие собственной эффективной системы логистики обеспечивает надежную поставку продукции по конкурентным ценам в точно указанные сроки.

Срок поставки со стоков в **Европе и Америке – от 3 до 14 дней.**

Срок поставки из **Азии – от 10 дней.**

Благодаря развитой сети поставщиков, помогаем в поиске и приобретении экзотичных или снятых с производства компонентов.

Предоставляем спец цены на элементы для создания инженерных сэмплов.

Упорный труд, качественный результат дают нам право быть уверенными в себе и надежными для наших клиентов.

Наша компания это:

- Гарантия качества поставляемой продукции
- Широкий ассортимент
- Минимальные сроки поставок
- Техническая поддержка
- Подбор комплектации
- Индивидуальный подход
- Гибкое ценообразование

Наша организация особенно сильна в поставках модулей, микросхем, пассивных компонентов, ксайленсах (XC), EPF, EPM и силовой электроники.

Большой выбор предлагаемой продукции, различные виды оплаты и доставки, позволят Вам сэкономить время и получить максимум выгоды от сотрудничества с нами!

Trade Electronics.ru

гарантия бесперебойности производства и качества выпускаемой продукции

Перечень производителей, продукцию которых мы поставляем на российский рынок

AMD
ANALOG DEVICES
BOURNS
Coilcraft
élantec Semiconductor, Inc.
HARRIS
Infineon
JRC
MICREL
MOTOROLA
nichicon
PHILIPS
ROHM
SGS-THOMSON
Sipex
TAIYO YUDEN
TOKO
ZILOG
Winbond
Allegro
ATMEL
BURR - BROWN
EXAR
HITACHI
intel
Lattice
muRata
OKI
QUALCOMM
SAMSUNG
SHARP
SONY
TDK
TOSHIBA
KYOCERA
ALTERA
AVX
CITILYST
CYPRESS
FAIRCHILD SEMICONDUCTOR
HOLTEK
International IOR Rectifier
LINEAR TECHNOLOGY
MITSUBISHI
National Semiconductor
ON Semiconductor
REALTEK
SANYO
SHINDENGEN
SGS
TECCOR
TUNDRA
XILINX
Amphenol
Bay Linear
CIRRUS LOGIC
DALLAS
FUJITSU
IDT
intersil
MAXIM
molex
NEC
Panasonic
RENESAS
SII
SIEMENS
ST
Texas Instruments
VISHAY
ZETEX SEMICONDUCTORS

Trade Electronics.ru

гарантия бесперебойности производства и качества выпускаемой продукции

С удовольствием будем прорабатывать для Вас поставки всех необходимых компонентов по текущим запросам для скорейшего выявления групп элементов, по которым сотрудничество именно с нашей компанией будет для Вас максимально выгодным!

С уважением,

Менеджер отдела продаж ООО

«Трейд Электроникс»

Шишлаков Евгений

8 (495)668-30-28 доб 169

manager28@tradeelectronics.ru

http://www.tradeelectronics.ru/