LASER DIODE DRIVER WITH INPUT D FLIP-FLOP

SY100EL1001

FEATURES

- **Up to 1.25Gb/s operation**
- **75mA peak drive current**
- **Separate modulation control**
- **Separate master reset for laser safety**
- **Differential inputs for data and clock**
- **75KΩ input pulldown resistor**
- **Single power supply**
- **Available in 16-pin SOIC package**

DESCRIPTION

The SY100EL1001 is a high speed current source for driving a semiconductor laser diode in optical transmission applications. The output current modulation is DC – voltage controlled. The integrated circuit contains the following functional blocks:

- Input Line Receiver
- D Flip-Flop
- Bias Control Circuitry
- Output Current Switch

A logic HIGH level at the data input results in the modulation current flowing through the OUT pin on the next rising edge of the clock. A logic HIGH level at the master reset input will disable the modulation current.

The device incorporates complementary open collector outputs with a capability of driving peak current of 75 mA.

The laser driver current is adjustable by selection of R_{SET}. The resistor R_{EXT} must be placed between /OUT and V_{CC} to dissipate the worst case power. R_{SER} is recommended to fix laser diode matching issues.

The SY100EL1001 utilizes the high performance bipolar ASSET™ technology.

BLOCK DIAGRAM

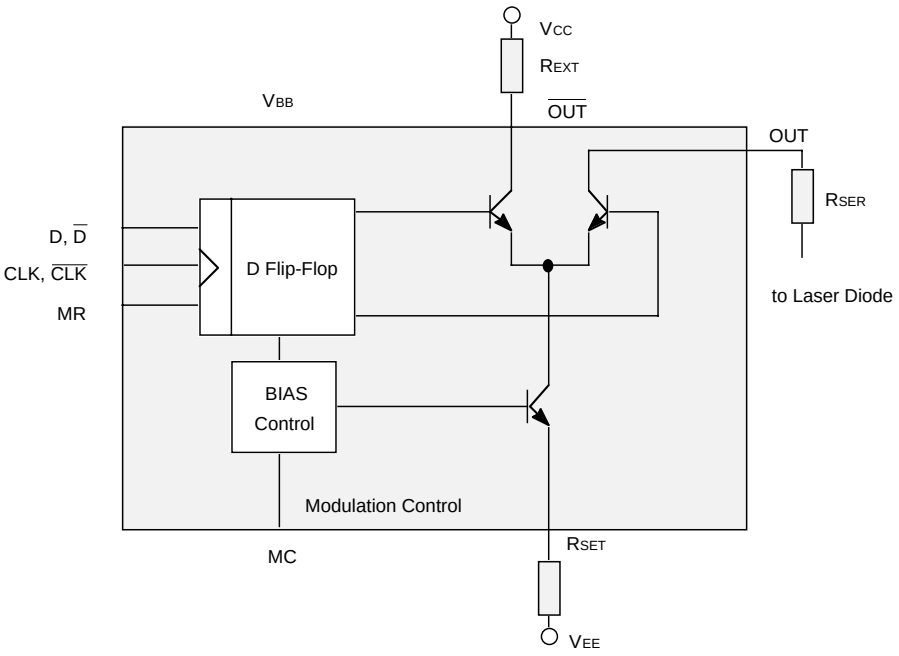

ASSET is a trademark of Micrel, Inc.

PACKAGE/ORDERING INFORMATION

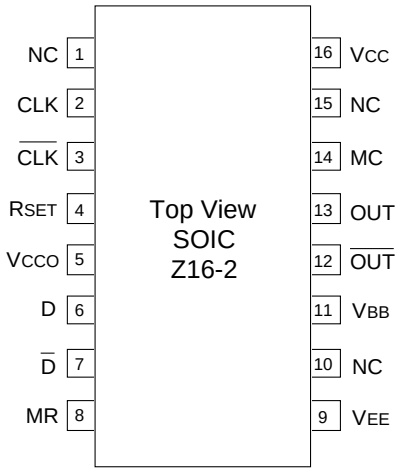

16-Pin Narrow SOIC (Z16-2)

Ordering Information[1]

Part Number	Package Type	Operating Range	Package Marking	Lead Finish
SY100EL1001ZC	Z16-2	Commercial	SY100EL1001ZC	Sn-Pb
SY100EL1001ZCTR[2]	Z16-2	Commercial	SY100EL1001ZC	Sn-Pb
SY100EL1001ZI	Z16-2	Industrial	SY100EL1001ZI	Sn-Pb
SY100EL1001ZITR[2]	Z16-2	Industrial	SY100EL1001ZI	Sn-Pb
SY100EL1001ZG[3]	Z16-2	Industrial	SY100EL1001ZG with Pb-Free bar-line indicator	Pb-Free NiPdAu
SY100EL1001ZGTR[2, 3]	Z16-2	Industrial	SY100EL1001ZG with Pb-Free bar-line indicator	Pb-Free NiPdAu

Notes:

1. Contact factory for die availability. Dice are guaranteed at T_A = 25°C, DC Electricals only.
2. Tape and Reel.
3. Pb-Free package is recommended for new designs.

PIN NAMES

Pin	Function
V_{CC}, V_{CCO}	Most positive power supply pins separation helps to isolate sensitive circuitry from noise generating function. +5V for PECL operation or ground for ECL operation.
V_{EE}	Most negative power supply input. Ground for PECL operation or -5V for ECL operation.
V_{BB}	This pin provides a reference voltage for use in single ended applications or when the input signal is AC coupled into the device.
D,/D	These differential ECL/PECL 100K compatible inputs receive NRZ data.
CLK, /CLK	These differential clock inputs
MR	This ECL/PECL 100K compatible input resets the Laser Driver Logic - modulation current transitions to zero when asserted high.
OUT, /OUT	Open collector outputs from the modulation buffer drive these differential current outputs.
MC	An external voltage sets the main value of modulation current I_O.
R_{SET}	An external resistor sets the source current for modulation Imod.
NC	These pins are not connected.

TRUTH TABLE[1]

D	/D	CLK	/CLK	MR	OUT	/OUT
L	H	Z	ZZ	L	H	L
H	L	Z	ZZ	L	L	H
X	X	X	X	H	H	L

Note:

1. L = LOW, H = HIGH, Z = LOW-to-HIGH transition, ZZ = HIGH-to-LOW transition, X = don't care.

ABSOLUTE MAXIMUM RATINGS[1]

Symbol	Rating	Value	Unit
V_{CC}	Power Supply Voltage (V_{CC} = 0V)	0 to –7.0	V
V_{IN}	Input Voltage (V_{CC} = 0V)	0 to –6.0	V
I_{OUT}	Output Current	75	mA
T_{LEAD}	Lead Temperatre (soldering, 20sec.)	+260	°C
T_A	Operating Temperature Range	–40 to +85	°C
P_D	Power Dissipation	500	mW

Note:

1. Permanent device damage may occur if absolute maximum ratings are exceeded. This is a stress rating only and functional operation is not implied at conditions other than those detailed in the operational sections of this data sheet. Exposure to absolute maximum ratlng conditions for extended periods may affect device reliability.

OPERATIONING CONDITIONS[1]

Symbol	Rating	Value	Unit
V_{EE}	Power Supply Voltage	–4.75 to –5.25	V
R_{SET}	Resistor to Adjust Current	10 to 100	Ω
R_{EXT}	Resistor to Dissipate Power	10 to 50	Ω
R_{SER}	Laser Diode Serial Resistor	0 to 50	Ω

Note:

1. The voltage drop across R_{EXT} and R_{SER} should not be greater than 2V.

DC ELECTRICAL CHARACTERISTICS[1]

$V_{CC} = V_{CCO} = 0V$; $V_{EE} = -5.0V \pm 5\%$

Symbol	Parameter	$T_A = -40°C$			$T_A = 0°C$			$T_A = +25°C$			$T_A = +85°C$			Unit
		Min.	Typ.	Max.	Min.	Typ.	Max.	Min.	Typ.	Max.	Min.	Typ.	Max.	
V_{IH}	Input HIGH Voltage (D, CLK, MR)	–1165	—	–880	–1165	—	–880	–1165	—	–880	–1165	—	–880	mV
V_{IL}	Input LOW Voltage (D, CLK, MR)	–1810	—	–1475	–1810	—	–1475	–1810	—	–1475	–1810	—	–1475	mV
V_{Imod}	Input Voltage (Modulation Control)	V_{EE}	—	V_{CC}	V_{EE}	—	V_{CC}	V_{EE}	—	V_{CC}	V_{EE}	—	V_{CC}	V
V_{BB}	Output Reference Voltage	–1380	—	–1260	–1380	—	–1260	–1380	—	–1260	–1380	—	–1260	mV
I_{IH}	Input HIGH Current (D, CLK, MR)	—	—	150	—	—	150	—	—	150	—	—	150	µA
I_{Imod}	Input Current (Modulation Control)	—	—	150	—	—	150	—	—	150	—	—	150	µA
I_{IL}	Input LOW Current[2] (D, CLK, MR)	0.5	—	—	0.5	—	—	0.5	—	—	0.5	—	—	µA
I_{CC}	Supply Current[3]	8	14	25	8	14	25	8	14	25	8	14	25	mA
I_{OH}	Output HIGH Current[4] (MR LOW)[5]	60	64 —	68 —	60 5	64 —	68 —	60 5	64 —	68 —	60 5	64 —	68 —	mA 5
I_{OL}	Output LOW Current (MR HIGH)	—	—	500	—	—	500	—	—	500	—	—	500	µA
I_{OR}	Output Current Ringing[6]	—	—	10	—	—	10	—	—	10	—	—	10	%
I_{Omod}	Laser Diode Modulation Current Range	5	—	60	5	—	60	5	—	60	5	—	60	mA

Notes:

1. $R_{SET} = 10\Omega \pm 1\%$
2. $V_I = V_{IL}$ (Min.)
3. V_{Imod} = VCC
4. $V_{Imod} = -3.5V$
5. $V_{Lmod} = -0.8V$
6. I_{OH} = 5 to 60mA

AC ELECTRICAL CHARACTERISTICS[1]

Symbol	Parameter	$T_A = -40°C$			$T_A = 0°C$			$T_A = +25°C$			$T_A = +85°C$			Unit
		Min.	Typ.	Max.	Min.	Typ.	Max.	Min.	Typ.	Max.	Min.	Typ.	Max.	
t_{pd} CLK	Propagation Delay CLK - OUT	—	—	1000	—	—	1000	—	—	1000	—	—	1000	ps
t_{pd} MR	Propogation Delay MR - OUT	—	—	1000	—	—	1000	—	—	1000	—	—	1000	ps
t_r t_f	Rise/Fall Time (20% to 80%)	—	—	400	—	—	400	—	—	400	—	—	400	ps
t_S	Set-up Time	100	—	—	100	—	—	100	—	—	100	—	—	ps
t_H	Hold Time	200	—	—	200	—	—	200	—	—	200	—	—	ps
t_{PW}	Minimum Pulse Width (CLK, MR)	400	—	—	400	—	—	400	—	—	400	—	—	ps

Note:

1. $R_{SET} = 10\Omega \pm 1\%$, $R_{EXT} = R_{SER} = 50\Omega \pm 1\%$

PERFORMANCE CURVES

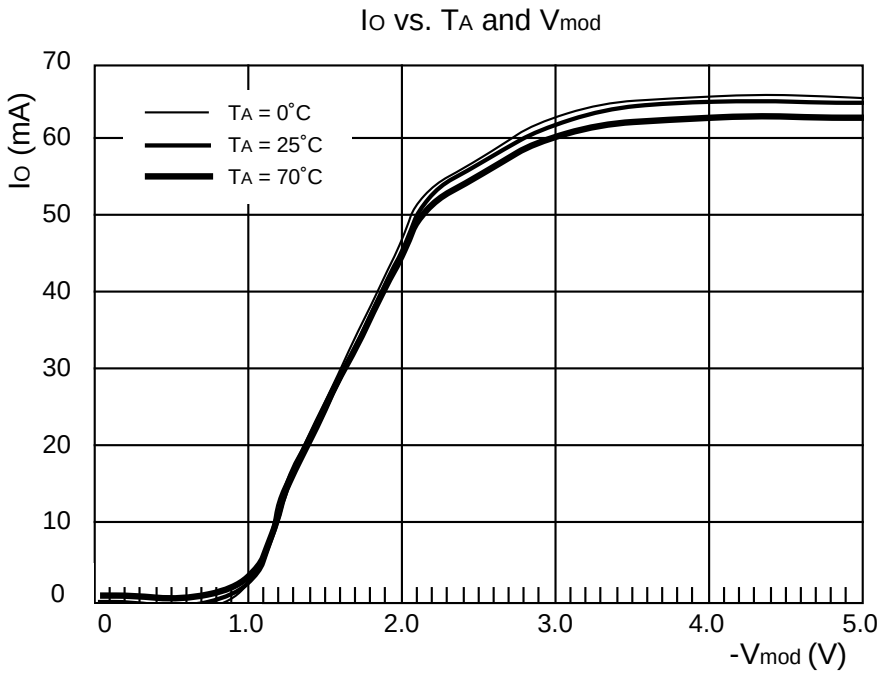

APPLICATION EXAMPLE

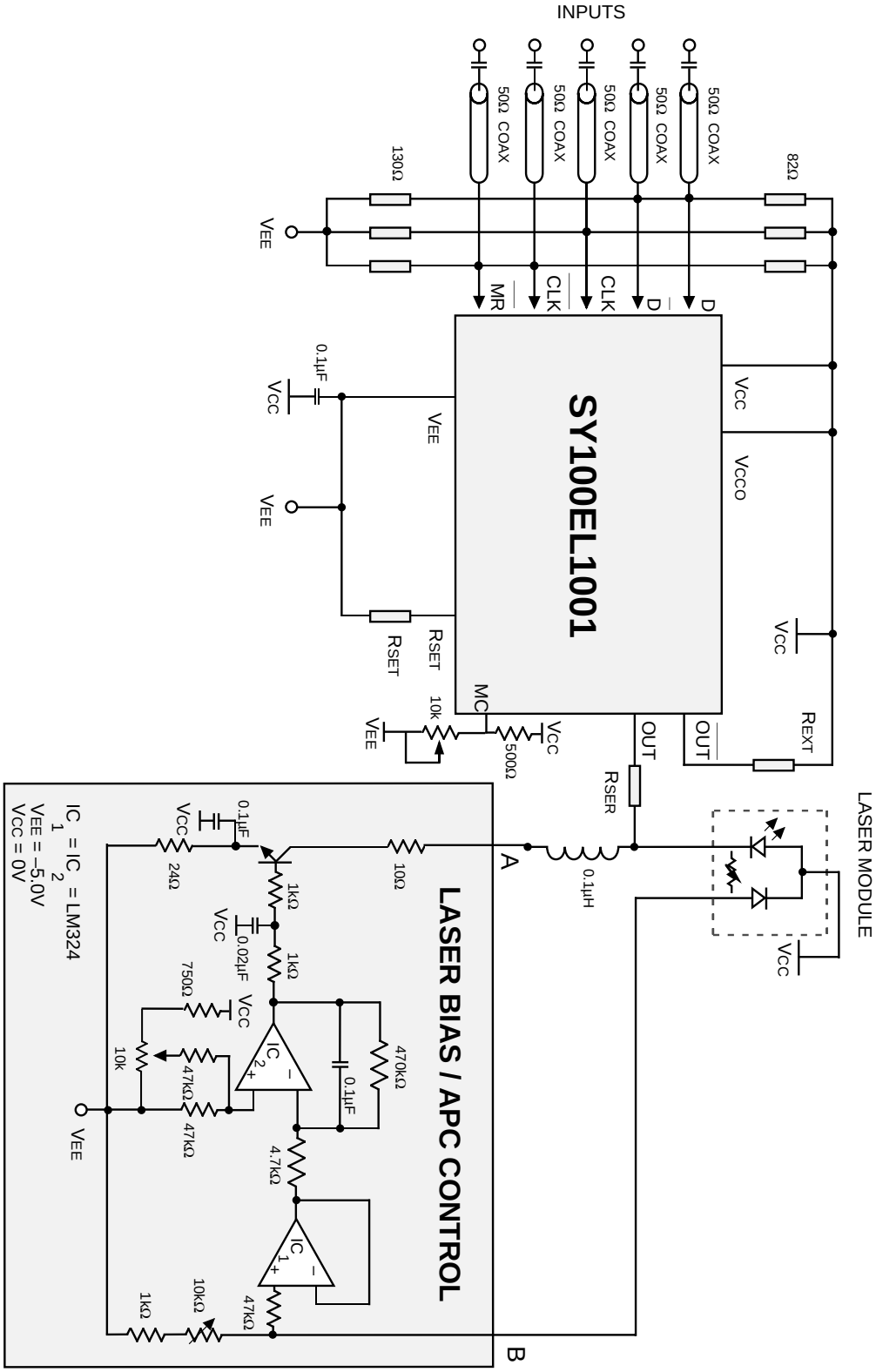

NOTES:

1. Split 100K ECL terminations are 82Ω and 130Ω to V_{CC} and V_{EE} respectively.
2. Recommended power supply bypass capacitors are 0.1µF with optional 10µF Tantalum in parallel.
3. High frequency design techniques are required for board layout. A double sided or multilayer board is recommended in conjunction with a low impedance ground plane and properly terminated transmission lines for all signal paths.
4. V_{BB} voltage pin may be used as reference for single ended input applications.

16-PIN SOIC .150" WIDE (Z16-2)

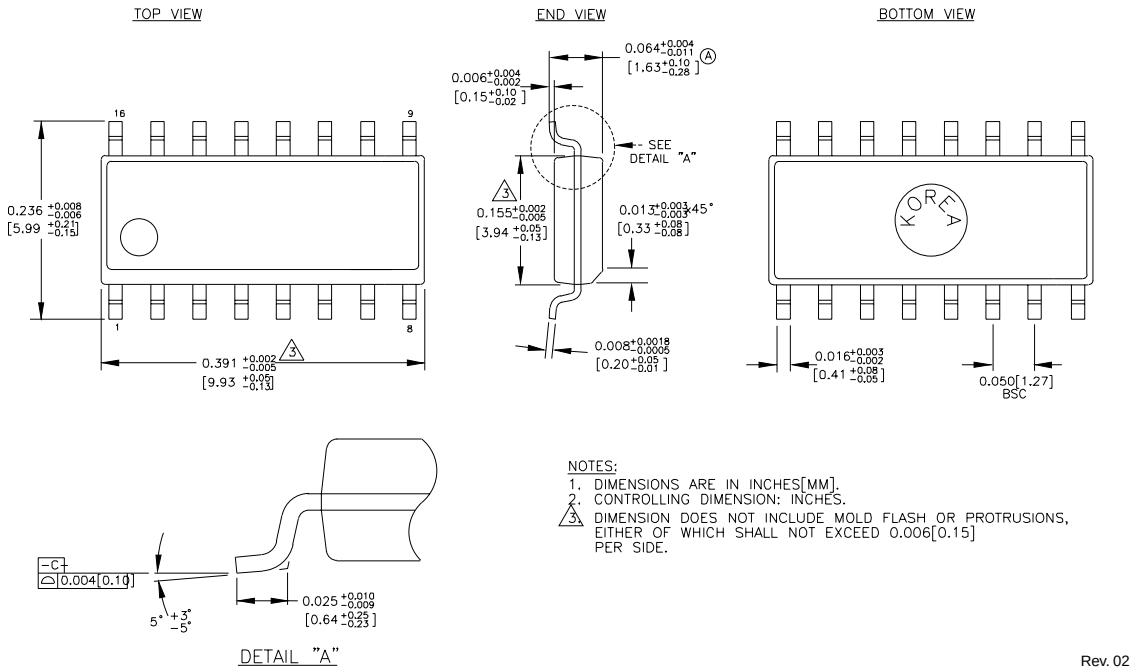

MICREL, INC. 2180 FORTUNE DRIVE SAN JOSE, CA 95131 USA

TEL + 1 (408) 944-0800 FAX + 1 (408) 474-1000 WEB http://www.micrel.com

The information furnished by Micrel in this datasheet is believed to be accurate and reliable. However, no responsibility is assumed by Micrel for its use. Micrel reserves the right to change circuitry and specifications at any time without notification to the customer.

Micrel Products are not designed or authorized for use as components in life support appliances, devices or systems where malfunction of a product can reasonably be expected to result in personal injury. Life support devices or systems are devices or systems that (a) are intended for surgical implant into the body or (b) support or sustain life, and whose failure to perform can be reasonably expected to result in a significant injury to the user. A Purchaser's use or sale of Micrel Products for use in life support appliances, devices or systems is at Purchaser's own risk and Purchaser agrees to fully indemnify Micrel for any damages resulting from such use or sale.

© 2006 Micrel, Incorporated.

О компании

ООО "ТрейдЭлектроникс" - это оперативные поставки широкого спектра электронных компонентов отечественного и импортного производства напрямую от производителей и с крупнейших мировых складов. Реализуемая нашей компанией продукция насчитывает более полумиллиона наименований.

Благодаря этому наша компания предлагает к поставке практически не ограниченный ассортимент компонентов как оптовыми, мелкооптовыми партиями, так и в розницу.

Наличие собственной эффективной системы логистики обеспечивает надежную поставку продукции по конкурентным ценам в точно указанные сроки.

Срок поставки со стоков в **Европе и Америке – от 3 до 14 дней.**

Срок поставки из **Азии – от 10 дней.**

Благодаря развитой сети поставщиков, помогаем в поиске и приобретении экзотичных или снятых с производства компонентов.

Предоставляем спец цены на элементы для создания инженерных сэмплов.

Упорный труд, качественный результат дают нам право быть уверенными в себе и надежными для наших клиентов.

Наша компания это:

- Гарантия качества поставляемой продукции
- Широкий ассортимент
- Минимальные сроки поставок
- Техническая поддержка
- Подбор комплектации
- Индивидуальный подход
- Гибкое ценообразование

Наша организация особенно сильна в поставках модулей, микросхем, пассивных компонентов, ксайленсах (XC), EPF, EPM и силовой электроники.

Большой выбор предлагаемой продукции, различные виды оплаты и доставки, позволят Вам сэкономить время и получить максимум выгоды от сотрудничества с нами!

Trade Electronics.ru

гарантия бесперебойности производства и качества выпускаемой продукции

Перечень производителей, продукцию которых мы поставляем на российский рынок

AMD
ANALOG DEVICES
BOURNS
Coilcraft
élantec Semiconductor, Inc.
HARRIS
Infineon
JRC
MICREL
MOTOROLA
nichicon
PHILIPS
ROHM
SGS-THOMSON
Sipex
TAIYO YUDEN
TOKO
ZILOG
Winbond
Allegro
ATMEL
BURR - BROWN
EXAR
HITACHI
intel
Lattice
muRata
OKI
QUALCOMM
SAMSUNG
SHARP
SONY
TDK
TOSHIBA
KYOCERA
ALTERA
AVX
CITILYST
CYPRESS
FAIRCHILD SEMICONDUCTOR
HOLTEK
International IOR Rectifier
LINEAR TECHNOLOGY
MITSUBISHI
National Semiconductor
ON Semiconductor
REALTEK
SANYO
SHINDENGEN
SGS
TECCOR
TUNDRA
XILINX
Amphenol
Bay Linear
CIRRUS LOGIC
DALLAS
FUJITSU
IDT
intersil
MAXIM
molex
NEC
Panasonic
RENESAS
SII
SIEMENS
ST
Texas Instruments
VISHAY
ZETEX SEMICONDUCTORS

Trade Electronics.ru

гарантия бесперебойности производства и качества выпускаемой продукции

С удовольствием будем прорабатывать для Вас поставки всех необходимых компонентов по текущим запросам для скорейшего выявления групп элементов, по которым сотрудничество именно с нашей компанией будет для Вас максимально выгодным!

С уважением,

Менеджер отдела продаж ООО

«Трейд Электроникс»

Шишлаков Евгений

8 (495)668-30-28 доб 169

manager28@tradeelectronics.ru

http://www.tradeelectronics.ru/