TELEPHONE SPEECH NETWORK WITH DIALER INTERFACE

DESCRIPTION

The ILA1062 and ILA1062A are integrated circuits that perform all speech and line interface functions required in fully
electronic telephone sets. They perform electronic switching between dialing and speech. The ICs operates at line voltage down
to 1.6 V DC (with reduced performance) to facilitate the use of more telephone sets connected in parallel.
All statements and values refer to all versions unless otherwise specified. The ILA1062(ILA1062A) is packaged in a standard
16-pin plastic DIP and special plastic DIP with internal heatsink is also available.

FEATURES

- Low DC line voltage; operates down to 1.6V (excluding polarity guard)
- Voltage regulator with adjustable static resistance
- Provides a supply for external circuits
- Symmetrical high-impedance inputs (64 kΩ) for dynamic, magnetic or piezo-electric microphones
- Asymmetrical high-impedance input (32 kΩ) for electret microphones
- DTMF signal input with confidence tone
- Mute input for pulse or DTMF dialing
  - ILA1062: active HIGH (MUTE)
  - ILA1062A: active LOW (MUTE)
- Receiving amplifier for dynamic, magnetic or piezo-electric earpieces
- Large gain setting range on microphone and earpiece amplifiers
- Line loss compensation (line current dependent) for microphone and earpiece amplifiers
- Gain control curve adaptable to exchange supply
- DC line voltage adjustment facility

PIN CONNECTION

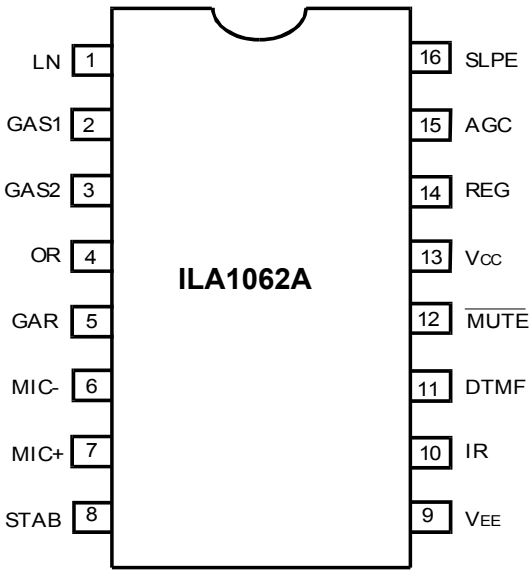

INTEGRAL

QUICK REFERENCE DATA

Characteristic	Symbol	Test Condition	Min	Typ	Max	Unit
Line Voltage	V_{LN}	I_{line} = 15mA	3.55	4.0	4.25	V
Operating Line Current	I_{line}			2.0		V_{dc}
Normal Operation			11		140	mA
with Reduced Performance			1		11	mA
Internal Supply Current	I_{CC}	V_{CC} = 2.8V		0.9	1.35	mA
Supply Voltage for Peripherals	V_{CC}	I_{line}= 15mA				V
		I_p= 1.2mA	2.2	2.7		
		I_p= 0mA	2.2	3.4		
Voltage Gain	G_V					
microphone amplifier			44		52	dB
receiving amplifier			20		31	dB
Line loss compensation						
Gain Control	DG_V			5.8		dB
Exchange Supply Voltage	V_{exch}		36		60	V
Exchange Feeding bridge Resistance	R_{exch}		0.4		1	kW

BLOCK DIAGRAM

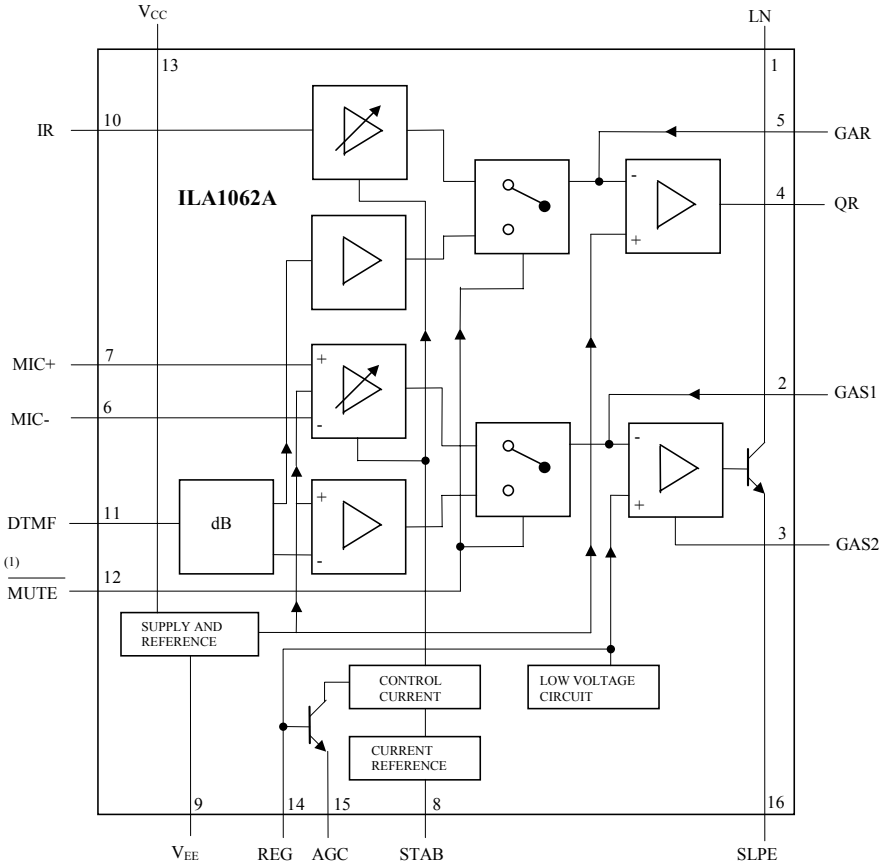

(1) Pin 12 is active HIGH (MUTE) for ILA1062.

Fig.1 Block diagram for ILA1062A

INTEGRAL

FUNCTIONAL DESCRIPTION

Supplies V_{CC}, LN, SLPE, REG and STAB

Power for the IC and its peripheral circuits is usually obtained from the telephone line. The supply voltage is delivered from the line via a dropping resistor and regulated by the IC. The supply voltage V_{CC} may also be used to supply external circuits e.g. dialing and control circuits.

Decoupling of the supply voltage is performed by a capacitor between V_{CC} and V_{EE} . The internal voltage regulator is decoupled by a capacitor between REG and $V_{EE.}$

The DC current flowing into the set is determined by the exchange supply voltage V_{exch} , the feeding bridge resistance R_{exch} and the DC resistance of the telephone line R_{line} .

The circuit has internal current stabilizer operating at a level determined by a 3.6 k? resistor connected between STAB and V_{EE} (see Fig.6). When the line current (I_{line}) is more than 0.5mA greater than the sum of the IC supply current (I_{CC}) and the current drawn by the peripheral circuitry connected to V_{CC} (I_p) the excess current is shunted to V_{EE} via LN.

The regulated voltage on the line terminal (V_{LN}) can be calculated as:

$V_{LN} = V_{ref} + I_{SLPE} \times R9$

$V_{LN} = V_{ref} + \{(I_{line} - I_{CC} - 0.5 \times 10^{-3}A) - I_p\} \times R9$

V_{ref} is an internally generated temperature compensated reference voltage of 3.7V and R9 is an external resistor connected between SLPE and $V_{EE.}$

In normal use the value of R9 would be 20?.

Changing the value of R9 will also affect microphone gain, DTMF gain, gain control characteristics, sidetone level, maximum output swing on LN and the DC characteristics (especially at the lower voltages).

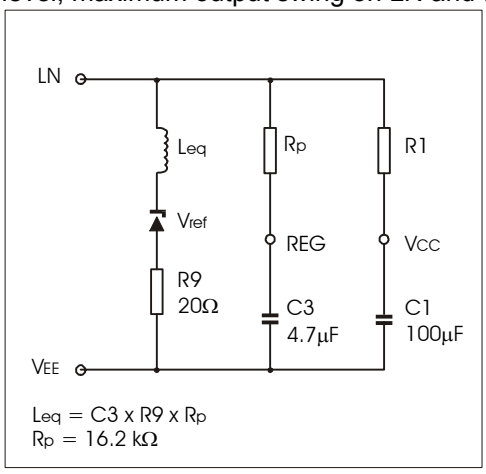

Fig.2 Equivalent impedance circuit

Under normal conditions, when $I_{SLPE} >> I_{CC} + 0.5mA + I_p$, the static behaviour of the circuit is that of a 3.7V regulator diode with an internal resistance equal to that of R9. In the audio frequency range the dynamic impedance is largely determined by R1. Fig.2 show the equivalent impedance of the circuit.
At line currents below 9mA the internal reference voltage is automatically adjusted to a lower value (typically 1.6V at 1mA). This means that more sets can be operated in parallel with DC line voltage (excluding the polarity guard) down to an absolute minimum voltage of 1.6V. At line currents below 9mA the circuit has limited sending and receiving levels. The internal reference voltage can be adjusted by means of an external resistor (R_{VA}). This resistor when connected between LN and REG will decrease the internal reference voltage and when connected between REG and SLPE will increase the internal reference voltage.

Microphone inputs MIC+ and MIC- and gain pins GAS1 and GAS2

The circuit has symmetrical microphone inputs. Its input impedance is 64 k? (2 x 32k?) and its voltage gain is typically 52 dB (when R7 = 68k?; see Fig.6).
Dynamic, magnetic, piezo-electric or electret (with built-in FET source followers) can be used.

The gain of the microphone amplifier can be adjusted between 44 dB and 52 dB to suit the sensitivity of the transducer in use. The gain is proportional to the value of R7 which is connected between GAS1 and GAS2.

Stability is ensured by two external capacitors, C6 connected between GAS1 and SLPE and C8 connected between GAS1 and VEE. The value of C6 is 100pF but this may be increased to obtain a first-order low-pass

filter. The value of C8 is 10 times the value of C6. The cut-off frequency corresponds to the time constant R7 x C6.

Input MUTE (ILA1062)

When MUTE is LOW or open-circuit, the DTMF input is enable and the microphone and receiving amplifier inputs are inhibited. The reverse is true when MUTE is HIGH.
MUTE switching causes only negligible clicking on the line and earpiece output. If the number of parallel sets in use causes a drop in line current to below 6 mA the DTMF amplifier becomes active independent to the DC level applied to the MUTE input.

Dual-tone multi-frequency input DTMF

When the DTMF input is enable dialing tones may be sent on to the line. The voltage gain from DTMF to LN is typically 25.5 dB (when R7=68k?) and varies with R7 in the same way as the microphone gain. The signalling tones can be heard in the earpiece at a low level (confidence tone).

Receiving amplifier IR, QR and GAR

The receiving amplifier has one input (IR) and a non-inverting output (QR). The IR to QR gain is typically 31dB (when R4 = 100k?). It can be adjusted between 20 and 31dB to match the sensitivity of the transducer in use. The gain is set with the value of R4 which is connected between GAR and QR. The overall receive gain, between LN and QR, is calculated by subtracting the anti-sidetone network attenuation (32dB) from the amplifier gain. Two external capacitors, C4 and C7, ensure stability. C4 is normally 100pF and C7 is 10 times the value of C4. The value of C4 may be increased to obtain a first-order low-pass filter. The cut-off frequency will depend on the time constant R4 x C4.

The output voltage of the receiving amplifier is specified for continuous-wave drive. The maximum output voltage will be higher under speech conditions where the peak to RMS ratio is higher.

Automatic gain control input AGC

Automatic line loss compensation is achieved by connecting a resistor (R6) between AGC and V_{EE}.

The automatic gain control varies the gain of the microphone amplifier and the receiving amplifier in accordance with the DC line current. The control range is 5.8 dB which corresponds to a line length of 5 km for a
0.5mm diameter twisted-pair copper cable with a DC resistance of 176 ?/km and average attenuation of 1.2dB/km. Resistor R6 should be chosen in accordance with the exchange supply voltage and its feeding bridge resistance. The ratio of start and stop currents of the AGC curve is independent of the value of R6. If no automatic
line-loss compensation is required the AGC pin may be left open-circuit. The amplifiers, in this condition, will give their maximum specified gain.

Sidetone suppression

The anti-sidetone network, R1//Z_{line}, R2, R3, R8, R9 and Z_{bal} suppresses the transmitted signal in the earpiece. Maximum compensation is obtained when the following conditions are fulfilled:

$$R9 \times R2 = R1 \times \left(R3 + \left(\frac{R8 \times Z_{bal}}{R8 + Z_{bal}} \right) \right) \qquad (1)$$

$$\frac{Z_{bal}}{Z_{bal} + R8} = \frac{Z_{line}}{Z_{line} + R1} \qquad (2)$$

If fixed values are chosen for R1, R2, R3 and R9, then condition (1) will always be fulfilled when

To obtain optimum sidetone suppression, condition (2) has to be fulfilled which results in:

$$Z_{bal} = \frac{R\,8}{R\,1} \times Z_{line} = k \times Z_{line}$$

Where k is scale factor; $k = \frac{R\,8}{R\,1}$

The scale factor k, dependent on the value of R8, is chosen to meet the following criteria:

- compatibility with a standard capacitor from the E6 or E12 range for Z_{bal}
- $|Z_{bal}//R8| << R8$ fulfilling condition (a) and thus ensuring correct anti-sidetone bridge operation
- $|Z_{bal} + R8| >> R9$ to avoid influencing the transmit gain.

In practise Z_{line} varies considerably with the line type and length. The value chosen for Z_{bal} should therefore be for an average line thus giving optimum setting for short or long lines.

ABSOLUTE MAXIMUM RATING

Characteristic		Symbol	Test Condition	Min	Typ	Max	Unit
Positive Continuous Line Voltage		V_{LN}				12	V
Repetitive Line Voltage During Switch-on or Line Interruption		$V_{LN(R)}$				13.2	V
Repetitive Peak Line Voltage for a 1ms Pulse per 5s		$V_{LN(RM)}$	R9 = 20w; R10 = 13w; see Fig.6			28	V
Line Current		I_{line}	R9 = 20w; note 1			140	mA
Input Voltage on all other Pins		V_I		-0.7		V_{CC}+0.7	V
Total Power Dissipation	Standard DIP	P_{tot}	R9 = 20w; note 2			0.58	W
	DIP with heatsink					0.67	
Operating Ambient Temperature		T_A		-25		+75	°C
Storage Temperature		T_{stg}		-40		+125	°C
Junction Temperature		T_j				+125	°C

Notes

1. Mostly dependent on the maximum required T_A and on the voltage between LN and SLPE.
2. Calculated for the maximum ambient temperature specified and a maximum junction temperature of 125°C.
   (Thermal Resistance R_{JA} = 85°C/W for standard DIP and R_{JA} = 75°C/W for special DIP with heatsink).

(1) T_A=45°C; P_{tot}=0.94W
(2) T_A=55°C; P_{tot}=0.82W
(3) T_A=65°C; P_{tot}=0.71W
(4) T_A=75°C; P_{tot}=0.58W

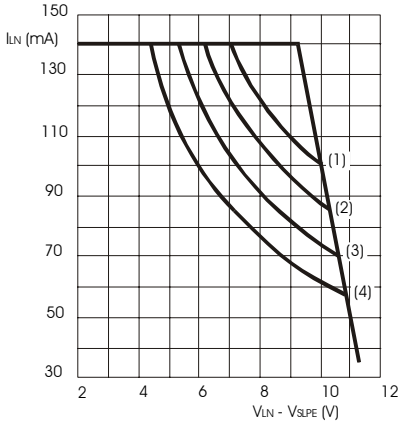

Fig.3a Safe operating area(Standard DIP)

(1) T_A=45°C; P_{tot}=1.07W
(2) T_A = 55°C; P_{tot}=0.93W
(3) T_A=65°C; P_{tot}=0.80 W
(4) T_A=75°C; P_{tot}=0.67 W

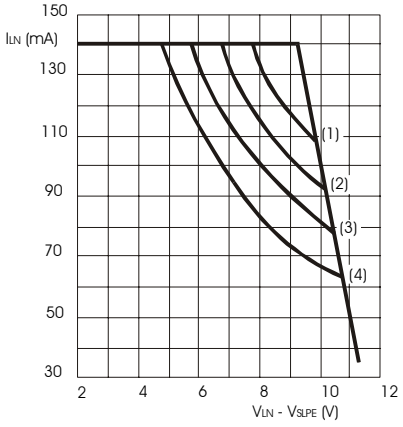

Fig.3b Safe operating area (DIP with HS)

INTEGRAL

CHARACTERISTICS

I_{line} = 11mA to mA; V_{EE} = 0V; f = 800Hz; T_A = 25°C; unless otherwise specified.

Characteristic	Symbol	Test Condition	Min	Typ	Max	Unit
Voltage Drop over Circuit between LN and V_{EE}	V_{LN}	MIC inputs open-circuit I_{line} = 1mA I_{line} = 4mA I_{line} = 15mA I_{line} = 100mA I_{line} = 140mA	 3.55 4.9	 1.6 1.9 4.0 5.7	 4.25 6.5 7.5	V
Variation with Temperature	$\|V_{LN}/\|T$	I_{line} = 15mA		-0.3		mV/°C
Voltage Drop over Circuit Between LN and V_{EE} with External Resistor R_{VA}	V_{LN}	I_{line} = 15mA R_{VA}(LN to REG) = 68kW R_{VA}(REG to SLPE) = 39kW		 3.5 4.5		V
Supply Current	I_{CC}	V_{CC} = 2.8V		0.9	1.35	mA
Supply Voltage available for Peripheral Circuitry	V_{CC}	I_{line} = 15mA; I_p = 1.2mA I_p = 0mA	 2.2	 2.7 3.4		V
Microphone inputs MIC- and MIC+ (pins 6 and 7)						
Input Impedance Differential	$\|Z_i\|$	between MIC- and MIC+		64		kW
Single-ended		MIC- or MIC+ to V_{EE}		32		kW
Common mode rejection ratio	CMRR			82		dB
Voltage Gain MIC+ or MIC- to LN	G_v	I_{line} = 15mA; R7 = 68kW	50.5	52.0	53.5	dB
Gain Variation with Frequency referenced to 800Hz	DG_{vf}	f = 300 and 3400 Hz		± 0.2		dB
Gain Variation with Temperature referenced to 25 °C	DG_{vT}	without R6; I_{line} = 50mA; T_A = -25 and +75 °C		± 0.2		dB
DTMF Input (Pin 11)						
Input Impedance	$\|Z_i\|$			20.7		kW
Voltage Gain from DTMF to LN	G_v	I_{line} = 15mA; R7 = 68kW	243.0	25.5	27.0	dB
Gain Variation with Frequency referenced to 800Hz	DG_{vf}	f = 300 and 3400 Hz		± 0.2		dB
Gain Variation with Temperature referenced to 25 °C	DG_{vT}	I_{line} = 50mA; T_A = -25 and +75 °C		± 0.2		dB
Gain adjustment inputs GAS1 and GAS2 (Pins2 and 3)						
Transmitting Amplifier Gain variation by adjustment of R7 between GAS1 and GAS2	DG_v		-8		0	dB
Sending amplifier output LN (Pin1)						
Output Voltage (RMS value)	$V_{LN(rms)}$	THD = 10 % I_{line} = 4mA I_{line} = 15mA	 1.7	 0.8 2.3		V
Noise Output Voltage (RMS value)	$V_{no(rms)}$	I_{line} = 15mA; R7 = 68kW; 200W between MIC- and MIC+;		-69		dBmp
Receiving amplifier input IR (Pin 10)						
Input Impedance	$\|Z_i\|$			21		kW
Receiving amplifier output QR (Pin 4)						
Output Impedance	$\|Z_o\|$			4		W
Voltage Gain from IR to QR	G_v	I_{line} = 15mA; R_L = 300W; (from pin 9 to pin 4)	29.5	31	32.5	dB
Gain Variation with Frequency referenced to 800Hz	DG_{vf}	f = 300 and 3400 Hz		± 0.2		dB
Gain Variation with Temperature referenced to 25°C	DG_{vT}	without R6; I_{line} = 50mA; T_A = -25 and +75°C		± 0.2		dB

Output Voltage (RMS value)	$V_{o(rms)}$	THD = 2%; sine wave drive; R4 = 100kW; I_{line} = 15mA; I_p = 0mA R_L = 150W R_L = 450W	 0.22 0.3	 0.33 0.48		 V V

INTEGRAL

Characteristic	Symbol	Test Condition	Min	Typ	Max	Unit
Output Voltage (RMS value)	$V_{o(rms)}$	THD = 10%; R4 = 100kW; R_L = 150W; I_{line} = 4mA		15		mV
Noise Output Voltage (RMS value)	$V_{no(rms)}$	I_{line} = 15mA; R4 = 100kW; IR open-circuit R_L = 300W		50		mV
Gain adjustment input GAR (Pin 5)						
Receiving Amplifier Gain Variation by adjustment of R4 between GAR and QR	DG_v		-11		0	dB
Mute input (Pin 12)						
HIGH Level Input Voltage	V_{IH}		1.5		V_{CC}	V
LOW Level Input Voltage	V_{IL}				0.3	V
Input Current	I_{MUTE}			8	15	mA
Reduction of Gain						
MIC+ or MIC- to LN TEA1062 TEA1062A	DG_v	 MUTE = HIGH MUTE = LOW		 70 70		dB
Voltage Gain from DTMF to QR TEA1062 TEA1062A	G_v	R4 = 100kW; R_L = 300W MUTE = HIGH MUTE = LOW		 -17 -17		dB
Automatic Gain Control Input AGC (Pin 15)						
Controlling the Gain from IR to QR and the Gain from MIC+, MIC- to LN Gain Control Range	DG_v	R6 = 110kW (between AGC and V_{EE}) I_{line} = 70mA		 5.8		 dB
Highest Line Current for Maximum Gain	I_{lineH}			23		mA
Lowest Line Current for Minimum Gain	I_{lineL}			61		mA

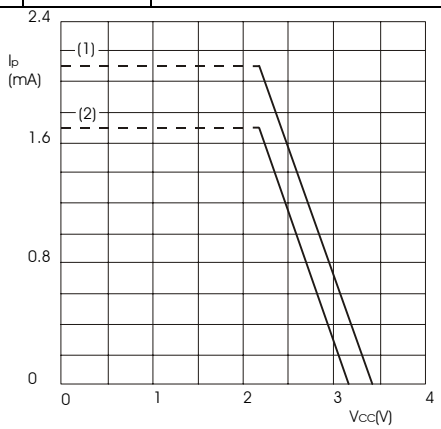

Fig.4 Typical current I_p available from V_{CC} for peripheral circuitry.

The supply possibilities can be increased by setting the voltage drop over the circuit V_{LN} to a higher value be resistor R_{VA} connected between REG and SLPE.
V_{CC} > 2.2V; I_{line} = 15mA at V_{LN} = 4V; R1 = 620W; R9 = 20W
(1) I_p = 2.1mA. Curve (1) is valid when the receiving or when MUTE = $\overline{\text{HIGH}}$(ILA1062), MUTE = LOW(ILA1062A).
(2) I_p = 1.7mA. Curve (2) is valid when MUTE = $\overline{\text{LOW}}$(ILA1062), MUTE = HIGH(ILA1062A) and the receiving amplifier is driven; $V_{o(rms)}$ = 150mV, R_L = 150W.

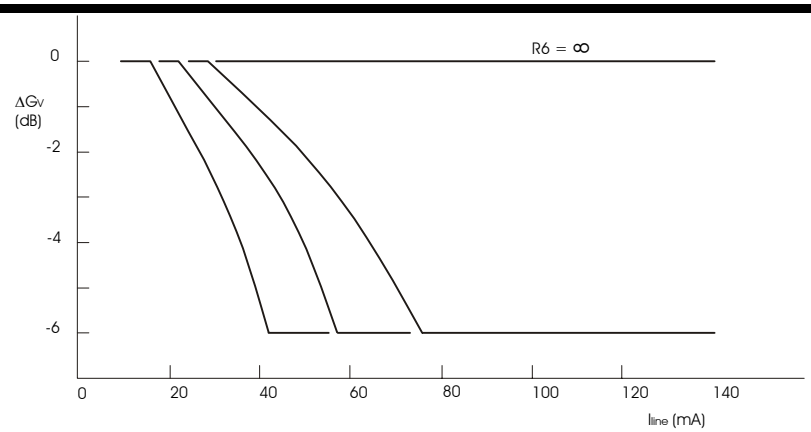

R9 = 20 Ω

Fig. 5 Variation of gain as a function of the line current with R6 as a parameter

TABLE 1

Values of resistor R6 for optimum line-loss compensation at various values of exchange supply voltage (V_{exch}) and exchange bridge resistance (R_{exch}); R9 = 20W.

V_{exch} (V)	400 R_{exch} (W)	600 R_{exch} (W)	800 R_{exch} (W)	1000 R_{exch} (W)
	R6 (kw)			
36	100	78.7	-	-
48	140	110	93.1	82
60	-	-	120	102

PINNING

Pin	Symbol	Description
1	LN	Positive Line Terminal
2	GAS1	Gain Adjustment; Transmitting Amplifier
3	GAS2	Gain Adjustment; Transmitting Amplifier
4	QR	Non-inverting Output; Receiving Amplifier
5	GAR	Gain Adjustment; Receiving Amplifier
6	MIC-	Inverting Microphone Input
7	MIC+	Non-inverting Microphone Input
8	STAB	Current Stabilizer
9	V_{EE}	Negative Line Terminal
10	IR	Receiving Amplifier Input
11	DTMF	Dual-tone Multi-Frequency Input
12	$\overline{\text{MUTE}}$	Mute Input (see note 1)
13	V_{CC}	Positive Supply Decoupling
14	REG	Voltage Regulator Decoupling
15	AGC	Automatic Gain Control Input
16	SLPE	Slope (DC resistance) Adjustment

Note 1. Pin 12 is active HIGH (MUTE) for ILA1062

APPLICATION INFORMATION

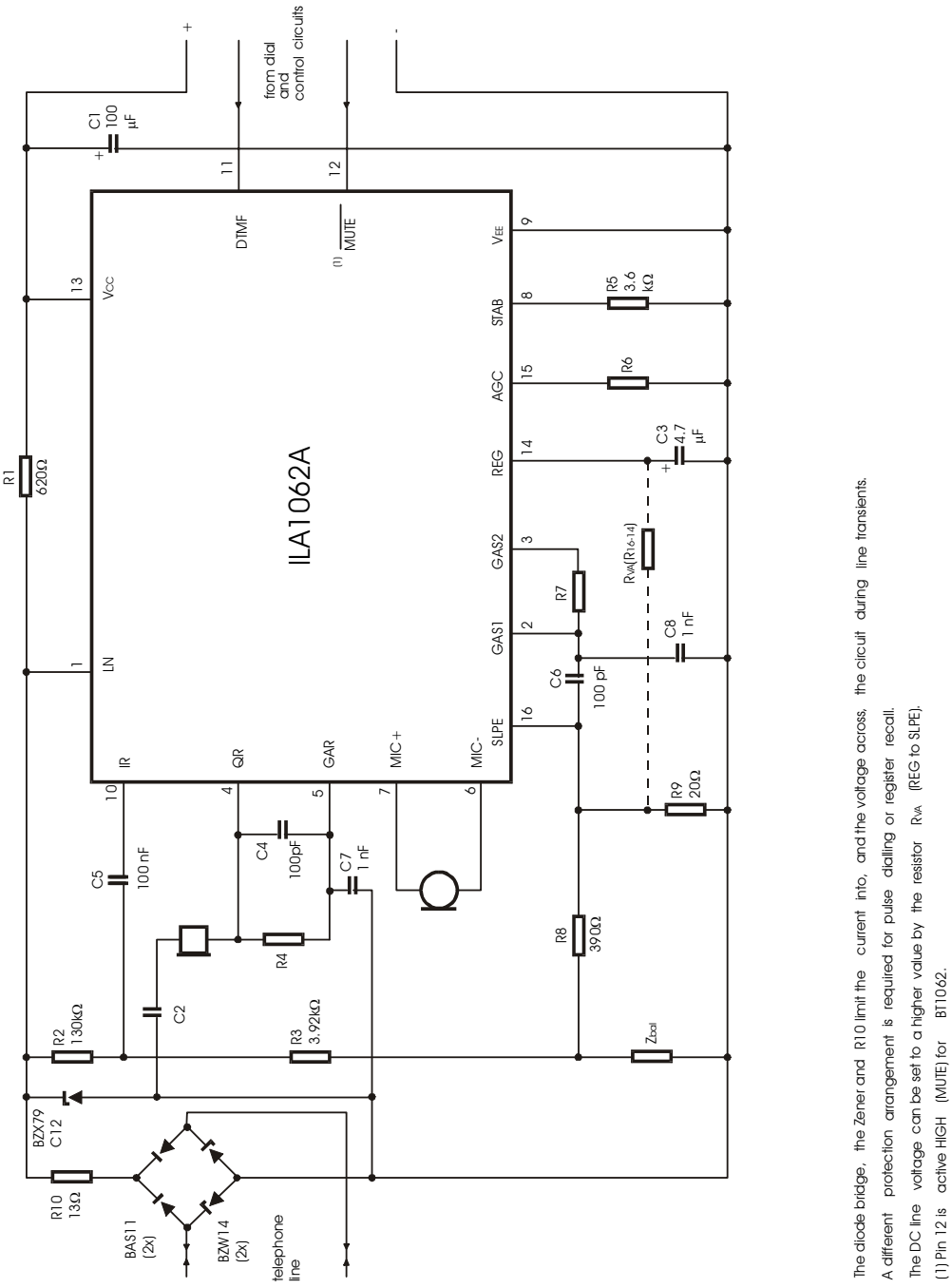

Fig. 6 Typical application of ILA1062A, with piezo-electric earpiece and DTMF dialling

TradeElectronics.ru

гарантия бесперебойности производства и качества выпускаемой продукции

О компании

ООО "ТрейдЭлектроникс" - это оперативные поставки широкого спектра электронных компонентов отечественного и импортного производства напрямую от производителей и с крупнейших мировых складов. Реализуемая нашей компанией продукция насчитывает более полумиллиона наименований.

Благодаря этому наша компания предлагает к поставке практически не ограниченный ассортимент компонентов как оптовыми, мелкооптовыми партиями, так и в розницу.

Наличие собственной эффективной системы логистики обеспечивает надежную поставку продукции по конкурентным ценам в точно указанные сроки.

Срок поставки со стоков в **Европе и Америке – от 3 до 14 дней.**

Срок поставки из **Азии – от 10 дней.**

Благодаря развитой сети поставщиков, помогаем в поиске и приобретении экзотичных или снятых с производства компонентов.

Предоставляем спец цены на элементы для создания инженерных сэмплов.

Упорный труд, качественный результат дают нам право быть уверенными в себе и надежными для наших клиентов.

Наша компания это:

- Гарантия качества поставляемой продукции
- Широкий ассортимент
- Минимальные сроки поставок
- Техническая поддержка
- Подбор комплектации
- Индивидуальный подход
- Гибкое ценообразование

Наша организация особенно сильна в поставках модулей, микросхем, пассивных компонентов, ксайленсах (XC), EPF, EPM и силовой электроники.

Большой выбор предлагаемой продукции, различные виды оплаты и доставки, позволят Вам сэкономить время и получить максимум выгоды от сотрудничества с нами!

Trade Electronics.ru

гарантия бесперебойности производства и качества выпускаемой продукции

Перечень производителей, продукцию которых мы поставляем на российский рынок

Trade Electronics.ru

гарантия бесперебойности производства и качества выпускаемой продукции

С удовольствием будем прорабатывать для Вас поставки всех необходимых компонентов по текущим запросам для скорейшего выявления групп элементов, по которым сотрудничество именно с нашей компанией будет для Вас максимально выгодным!

С уважением,

Менеджер отдела продаж ООО

«Трейд Электроникс»

Шишлаков Евгений

8 (495)668-30-28 доб 169

manager28@tradeelectronics.ru

http://www.tradeelectronics.ru/