USB Microcontroller with 64K Bytes Flash Memory

AT89C5132

Preliminary

Summary

Features

- **Programmable Audio Output for Interfacing with Common Audio DAC**
  - **PCM Format Compatible**
  - **I^2S Format Compatible**
- **8-bit MCU C51 Core-based (F_{MAX} = 20 MHz)**
- **2304 Bytes of Internal RAM**
- **64K Bytes of Code Memory**
  - **AT89C5132: Flash (100K Write/Erase Cycles)**
- **4K Bytes of Boot Flash Memory (AT89C5132)**
  - **ISP: Download from USB or UART to any External Memory Cards**
- **USB Rev 1.1 Device Controller**
  - **"Full Speed" Data Transmission**
- **Built-in PLL**
- **MultiMedia Card® Interface Compatibility**
- **Atmel DataFlash® SPI Interface Compatibility**
- **IDE/ATAPI Interface**
- **2 Channels 10-bit ADC, 8 kHz (8 True Bits)**
  - **Battery Voltage Monitoring**
  - **Voice Recording Controlled by Software**
- **Up to 44 Bits of General-purpose I/Os**
  - **4-bit Interrupt Keyboard Port for a 4 x n Matrix**
  - **SmartMedia® Software Interface**
- **Two Standard 16-bit Timers/Counters**
- **Hardware Watchdog Timer**
- **Standard Full Duplex UART with Baud Rate Generator**
- **Two Wire Master and Slave Modes Controller**
- **SPI Master and Slave Modes Controller**
- **Power Management**
  - **Power-on Reset**
  - **Software Programmable MCU Clock**
  - **Idle Mode, Power-down Mode**
- **Operating Conditions**
  - **3V, ±10%, 25 mA Typical Operating at 25°C**
  - **Temperature Range: -40°C to +85°C**
- **Packages**
  - **TQFP80, PLCC84 (Development Board Only)**
  - **Dice**

Description

The AT89C5132 is a mass storage device controlling data exchange between various Flash modules, HDD and CD-ROM.

The AT89C5132 includes 64K Bytes of Flash memory and allows In-System Programming through an embedded 4K Bytes of Boot Flash Memory.

The AT89C5132 include 2304 Bytes of RAM memory.

The AT89C5132 provides all the necessary features for man-machine interface including, timers, keyboard port, serial or parallel interface (USB, SPI, IDE), ADC input, I^2S output, and all external memory interface (NAND or NOR Flash, SmartMedia, MultiMedia, DataFlash cards).

Typical Applications

- Flash Recorder/Writer
- PDA, Camera, Mobile Phone
- PC Add-on

Rev. 4173CS–USB–07/04

Block Diagram

Figure 1. AT89C5132 Block Diagram

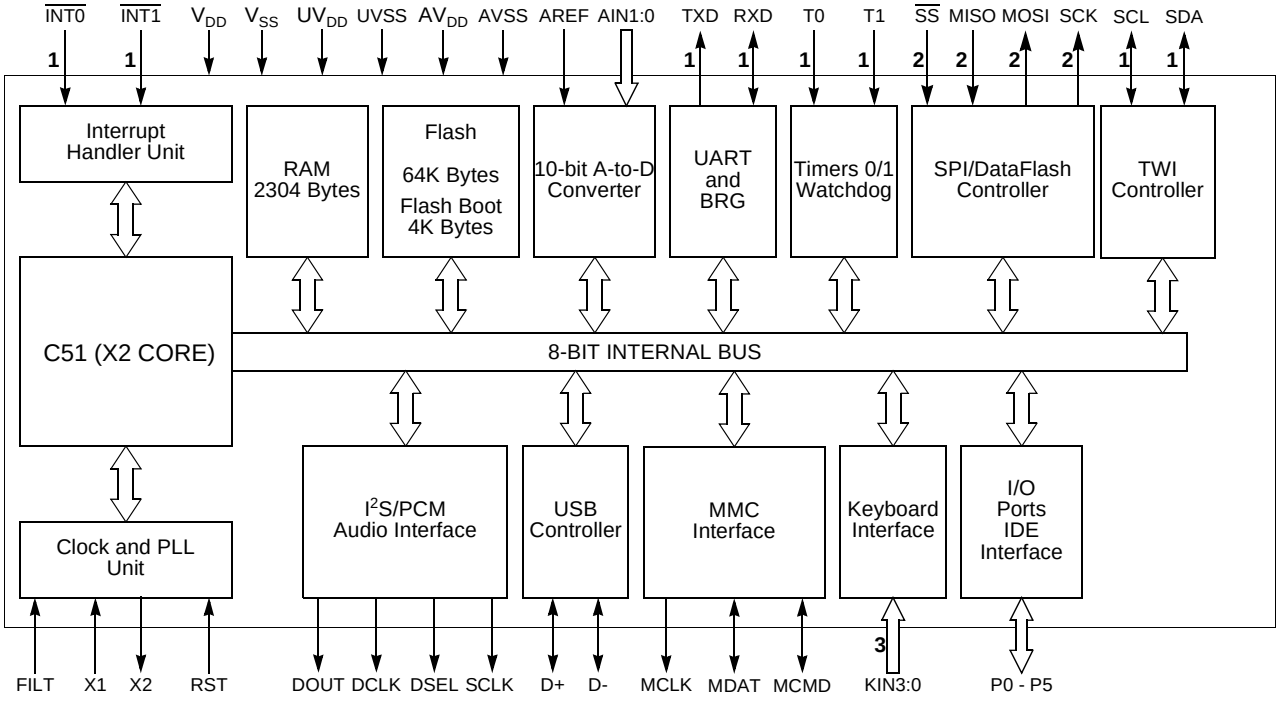

Notes: 1. Alternate function of Port 3
2. Alternate function of Port 4
3. Alternate function of Port 1

Pin Description

Figure 2. AT89C5132 80-pin TQFP Package

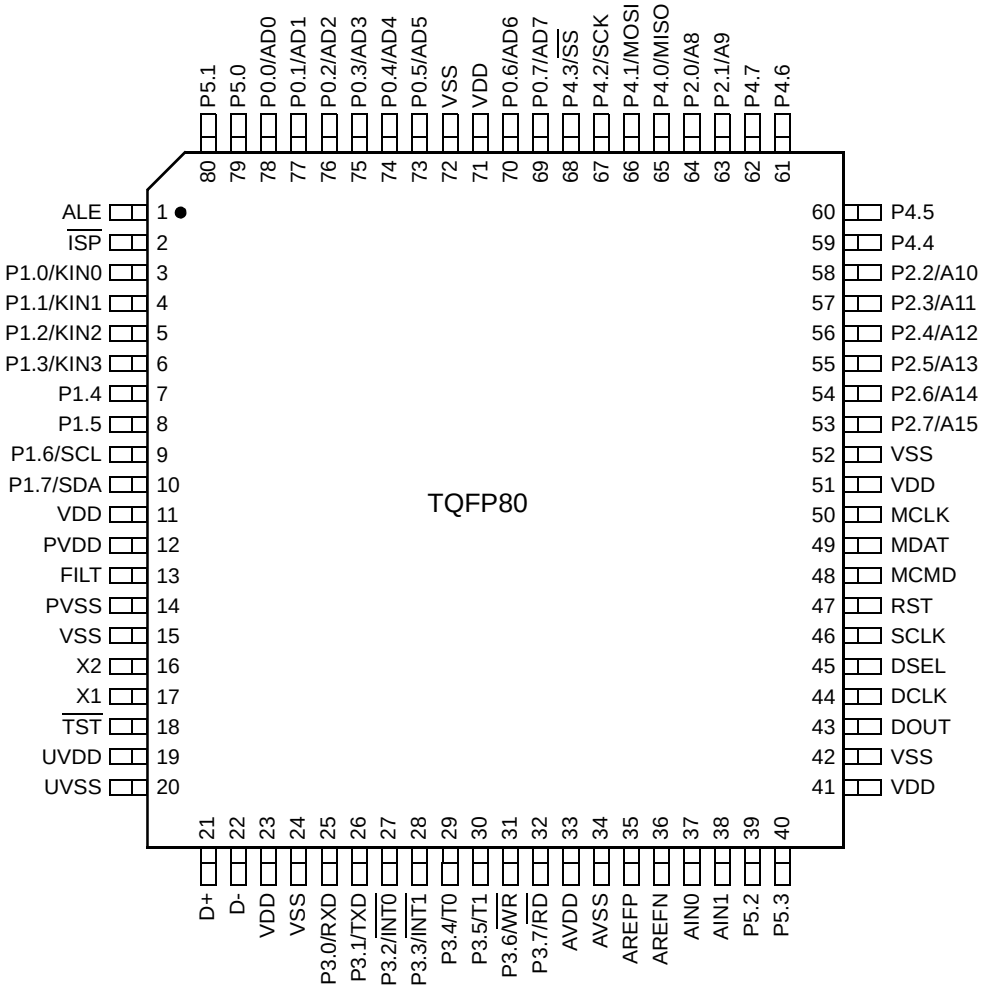

Figure 3. AT89C5132 84-pin PLCC [1]

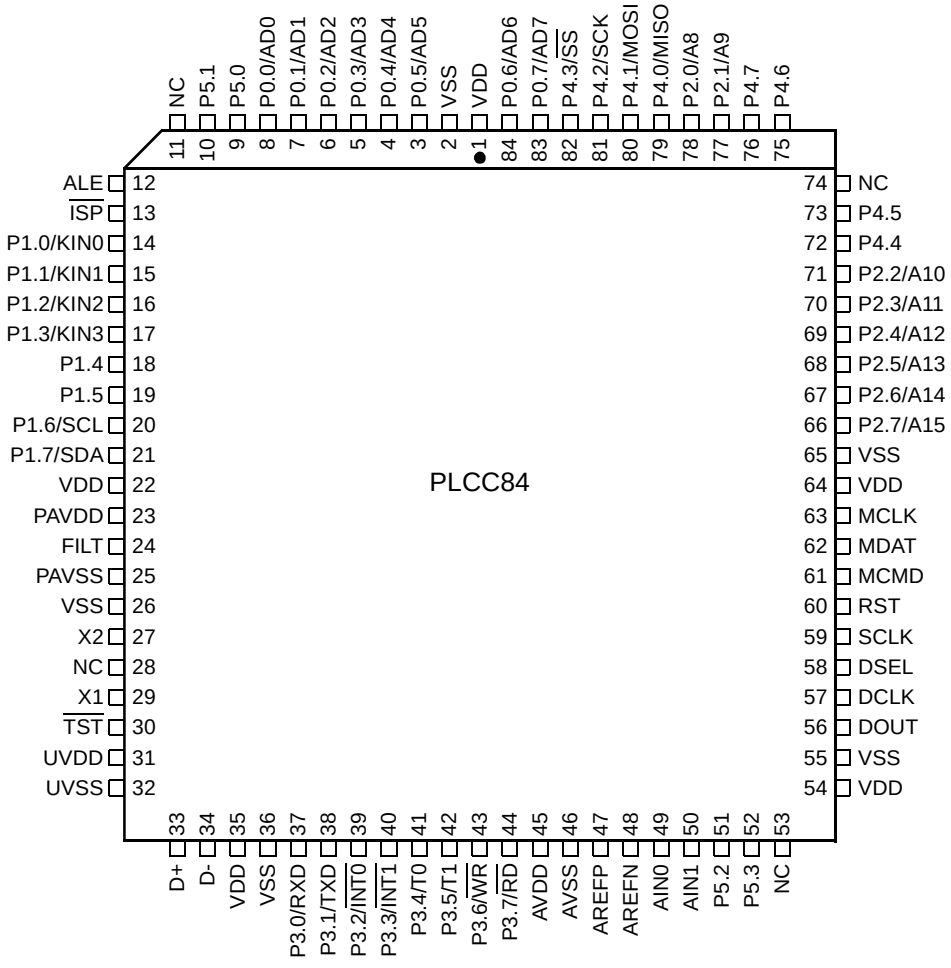

Note: 1. For development board only.

Signals

All the AT89C5132 signals are detailed by functionality in Table 1 to Table 15.

Table 1. Ports Signal Description

Signal Name	Type	Description	Alternate Function
P0.7:0	I/O	**Port 0** P0 is an 8-bit open-drain bidirectional I/O port. Port 0 pins that have 1s written to them float and can be used as high impedance inputs. To avoid any parasitic current consumption, floating P0 inputs must be polarized to V_{DD} or V_{SS}.	AD7:0
P1.7:0	I/O	**Port 1** P1 is an 8-bit bidirectional I/O port with internal pull-ups.	KIN3:0 SCL SDA
P2.7:0	I/O	**Port 2** P2 is an 8-bit bidirectional I/O port with internal pull-ups.	A15:8
P3.7:0	I/O	**Port 3** P3 is an 8-bit bidirectional I/O port with internal pull-ups.	RXD TXD $\overline{INT0}$ $\overline{INT1}$ T0 T1 $\overline{WR}$ $\overline{RD}$
P4.7:0	I/O	**Port 4** P4 is an 8-bit bidirectional I/O port with internal pull-ups.	MISO MOSI SCK $\overline{SS}$
P5.3:0	I/O	**Port 5** P5 is a 4-bit bidirectional I/O port with internal pull-ups.	-

Table 2. Clock Signal Description

Signal Name	Type	Description	Alternate Function
X1	I	**Input to the on-chip inverting oscillator amplifier** To use the internal oscillator, a crystal/resonator circuit is connected to this pin. If an external oscillator is used, its output is connected to this pin. X1 is the clock source for internal timing.	-
X2	O	**Output of the on-chip inverting oscillator amplifier** To use the internal oscillator, a crystal/resonator circuit is connected to this pin. If an external oscillator is used, leave X2 unconnected.	-
FILT	I	**PLL Low Pass Filter input** FILT receives the RC network of the PLL low pass filter.	-

Table 3. Timer 0 and Timer 1 Signal Description

Signal Name	Type	Description	Alternate Function
$\overline{\text{INT0}}$	I	**Timer 0 Gate Input** $\overline{\text{INT0}}$ serves as external run control for timer 0, when selected by GATE0 bit in TCON register. **External Interrupt 0** $\overline{\text{INT0}}$ input sets IE0 in the TCON register. If bit IT0 in this register is set, bit IE0 is set by a falling edge on INT0#. If bit IT0 is cleared, bit IE0 is set by a low level on INT0#.	P3.2
$\overline{\text{INT1}}$	I	**Timer 1 Gate Input** $\overline{\text{INT1}}$ serves as external run control for timer 1, when selected by GATE1 bit in TCON register. **External Interrupt 1** $\overline{\text{INT1}}$ input sets IE1 in the TCON register. If bit IT1 in this register is set, bit IE1 is set by a falling edge on INT1#. If bit IT1 is cleared, bit IE1 is set by a low level on INT1#.	P3.3
T0	I	**Timer 0 External Clock Input** When timer 0 operates as a counter, a falling edge on the T0 pin increments the count.	P3.4
T1	I	**Timer 1 External Clock Input** When timer 1 operates as a counter, a falling edge on the T1 pin increments the count.	P3.5

Table 4. Audio Interface Signal Description

Signal Name	Type	Description	Alternate Function
DCLK	O	**DAC Data Bit Clock**	-
DOUT	O	**DAC Audio Data**	-
DSEL	O	**DAC Channel Select Signal** DSEL is the sample rate clock output.	-
SCLK	O	**DAC System Clock** SCLK is the oversampling clock synchronized to the digital audio data (DOUT) and the channel selection signal (DSEL).	-

Table 5. USB Controller Signal Description

Signal Name	Type	Description	Alternate Function
D+	I/O	**USB Positive Data Upstream Port** This pin requires an external 1.5 KΩ pull-up to V_{DD} for full speed operation.	-
D-	I/O	**USB Negative Data Upstream Port**	-

Table 6.

Table 7. MutiMediaCard Interface Signal Description

Signal Name	Type	Description	Alternate Function
MCLK	O	**MMC Clock output** Data or command clock transfer.	-
MCMD	I/O	**MMC Command line** Bidirectional command channel used for card initialization and data transfer commands. To avoid any parasitic current consumption, unused MCMD input must be polarized to V_{DD} or V_{SS}.	-
MDAT	I/O	**MMC Data line** Bidirectional data channel. To avoid any parasitic current consumption, unused MDAT input must be polarized to V_{DD} or V_{SS}.	-

Table 8. UART Signal Description

Signal Name	Type	Description	Alternate Function
RXD	I/O	**Receive Serial Data** RXD sends and receives data in serial I/O mode 0 and receives data in serial I/O modes 1, 2 and 3.	P3.0
TXD	O	**Transmit Serial Data** TXD outputs the shift clock in serial I/O mode 0 and transmits data in serial I/O modes 1, 2 and 3.	P3.1

Table 9. SPI Controller Signal Description

Signal Name	Type	Description	Alternate Function
MISO	I/O	**SPI Master Input Slave Output Data Line** When in master mode, MISO receives data from the slave peripheral. When in slave mode, MISO outputs data to the master controller.	P4.0
MOSI	I/O	**SPI Master Output Slave Input Data Line** When in master mode, MOSI outputs data to the slave peripheral. When in slave mode, MOSI receives data from the master controller.	P4.1
SCK	I/O	**SPI Clock Line** When in master mode, SCK outputs clock to the slave peripheral. When in slave mode, SCK receives clock from the master controller.	P4.2
$\overline{SS}$	I	**SPI Slave Select Line** When in controlled slave mode, $\overline{SS}$ enables the slave mode.	P4.3

Table 10. TWI Controller Signal Description

Signal Name	Type	Description	Alternate Function
SCL	I/O	**TWI Serial Clock** When TWI controller is in master mode, SCL outputs the serial clock to the slave peripherals. When TWI controller is in slave mode, SCL receives clock from the master controller.	P1.6
SDA	I/O	**TWI Serial Data** SDA is the bidirectional Two Wire data line.	P1.7

Table 11. A/D Converter Signal Description

Signal Name	Type	Description	Alternate Function
AIN1:0	I	**A/D Converter Analog Inputs**	-
AREFP	I	**Analog Positive Voltage Reference Input**	-
AREFN	I	**Analog Negative Voltage Reference Input** This pin is internally connected to AVSS.	-

Table 12. Keypad Interface Signal Description

Signal Name	Type	Description	Alternate Function
KIN3:0	I	**Keypad Input Lines** Holding one of these pins high or low for 24 oscillator periods triggers a keypad interrupt.	P1.3:0

Table 13. External Access Signal Description

Signal Name	Type	Description	Alternate Function
A15:8	I/O	**Address Lines** Upper address lines for the external bus. Multiplexed higher address and data lines for the IDE interface.	P2.7:0
AD7:0	I/O	**Address/Data Lines** Multiplexed lower address and data lines for the external memory or the IDE interface.	P0.7:0
ALE	O	**Address Latch Enable Output** ALE signals the start of an external bus cycle and indicates that valid address information is available on lines A7:0. An external latch is used to demultiplex the address from address/data bus.	-
$\overline{ISP}$	I/O	**ISP Enable Input** This signal must be held to GND through a pull-down resistor at the falling reset to force execution of the internal bootloader.	-
$\overline{RD}$	O	**Read Signal** Read signal asserted during external data memory read operation.	P3.7
$\overline{WR}$	O	**Write Signal** Write signal asserted during external data memory write operation.	P3.6

Table 14. System Signal Description

Signal Name	Type	Description	Alternate Function
RST	I	**Reset Input** Holding this pin high for 64 oscillator periods while the oscillator is running resets the device. The Port pins are driven to their reset conditions when a voltage lower than V_{IL} is applied, whether or not the oscillator is running. This pin has an internal pull-down resistor which allows the device to be reset by connecting a capacitor between this pin and V_{DD}. Asserting RST when the chip is in Idle mode or Power-Down mode returns the chip to normal operation.	-
$\overline{TST}$	I	**Test Input** Test mode entry signal. This pin must be set to V_{DD}.	-

Table 15. Power Signal Description

Signal Name	Type	Description	Alternate Function
VDD	PWR	**Digital Supply Voltage** Connect these pins to +3V supply voltage.	-
VSS	GND	**Circuit Ground** Connect these pins to ground.	-
AVDD	PWR	**Analog Supply Voltage** Connect this pin to +3V supply voltage.	-
AVSS	GND	**Analog Ground** Connect this pin to ground.	-
PVDD	PWR	**PLL Supply voltage** Connect this pin to +3V supply voltage.	-
PVSS	GND	**PLL Circuit Ground** Connect this pin to ground.	-
UVDD	PWR	**USB Supply Voltage** Connect this pin to +3V supply voltage.	-
UVSS	GND	**USB Ground** Connect this pin to ground.	-

Internal Pin Structure

Table 16. Detailed Internal Pin Structure

Circuit[1]	Type	Pins
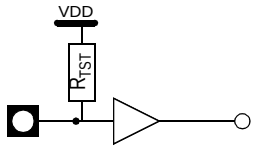	Input	$\overline{TST}$
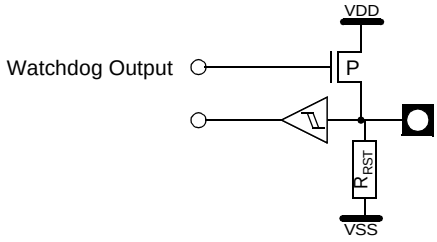	Input/Output	RST
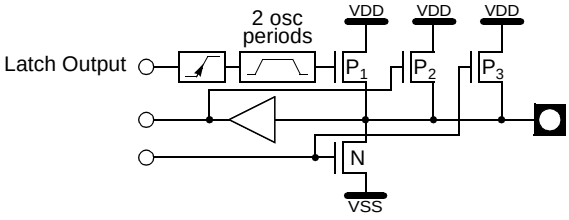	Input/Output	P1[2] P2[3] P3 P4 P53:0
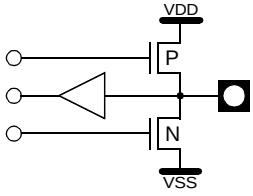	Input/Output	P0 MCMD MDAT $\overline{ISP}$ $\overline{PSEN}$
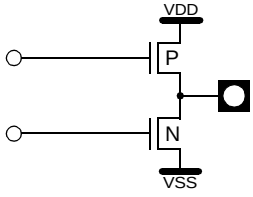	Output	ALE SCLK DCLK DOUT DSEL MCLK
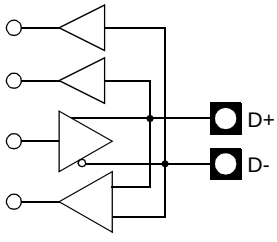	Input/Output	D+ D-

Notes:
1. For information on resistors value, input/output levels, and drive capability, refer to the Section “DC Characteristics”, page 183.
2. When the Two Wire controller is enabled, P_1, P_2, and P_3 transistors are disabled allowing pseudo open-drain structure.
3. In Port 2, P_1 transistor is continuously driven when outputting a high level bit address (A15:8).

Address Spaces

The AT8xC5132 derivatives implement four different address spaces:

- Program/Code Memory
- Boot Memory
- Data Memory
- Special Function Registers (SFRs)

Code Memory

The AT89C5132 implements 64K Bytes of on-chip program/code memory in Flash technology.

The Flash memory increases ROM functionality by enabling in-circuit electrical erasure and programming. Thanks to the internal charge pump, the high voltage needed for programming or erasing Flash cells is generated on-chip using the standard V_{DD} voltage. Thus, the AT89C5132 can be programmed using only one voltage and allows in application software programming commonly known as IAP. Hardware programming mode is also available using specific programming tools.

Boot Memory

The AT89C5132 implements 4K Bytes of on-chip boot memory provided in Flash technology. This boot memory is delivered programmed with a standard bootloader software allowing in system programming commonly known as ISP. It also contains some Application Programming Interfaces routines commonly known as API allowing user to develop his own bootloader.

Data Memory

The AT89C5132 derivatives implement 2304 bytes of on-chip data RAM. This memory is divided in two separate areas:

- 256 bytes of on-chip RAM memory (standard C51 memory).
- 2048 bytes of on-chip expanded RAM memory (ERAM accessible via MOVX instructions).

Peripherals

The AT8xC5132 peripherals are briefly described in the following sections. For further details on how to interface (hardware and software) to these peripherals, please refer to the AT8xC5132 complete datasheet.

Clock Generator System

The AT8xC5132 internal clocks are extracted from an on-chip PLL fed by an on-chip oscillator. Four clocks are generated respectively for the C51 core, the audio interface, and the other peripherals. The C51 and peripheral clocks are derived from the oscillator clock. The audio interface sample rates are also obtained by dividing the PLL output clock.

Ports

The AT8xC5132 implement five 8-bit ports (P0 to P4) and one 4-bit port (P5). In addition to performing general-purpose I/Os, some ports are capable of external data memory operations; others allow for alternate functions. All I/O Ports are bidirectional. Each Port contains a latch, an output driver and an input buffer. Port 0 and Port 2 output drivers and input buffers facilitate external memory operations. Some Port 1, Port 3 and Port 4 pins serve for both general-purpose I/Os and alternate functions.

Timers/Counters

The AT8xC5132 implement the two general-purpose, 16-bit Timers/Counters of a standard C51. They are identified as Timer 0, Timer 1, and can independently be configured each to operate in a variety of modes as a Timer or as an event Counter. When operating as a Timer, a Timer/Counter runs for a programmed length of time, then issues an interrupt request. When operating as a Counter, a Timer/Counter counts negative transitions on an external pin. After a preset number of counts, the Counter issues an interrupt request.

Watchdog Timer

The AT8xC5132 implement a hardware Watchdog Timer that automatically resets the chip if it is allowed to time out. The WDT provides a means of recovering from routines that do not complete successfully due to software or hardware malfunctions.

Audio Output Interface

The AT8xC5132 implements an audio output interface allowing the decoded audio bitstream to be output in various formats. They are compatible with right and left justification PCM and I^2S formats and the on-chip PLL allows connection of almost all commercial audio DAC families available on the market.

Universal Serial Bus Interface

The AT8xC5132 implements a full-speed Universal Serial Bus Interface. The USB interface can be used for the following purposes:

- Download of files by supporting the USB mass storage class.
- In-System Programming by supporting the USB firmware upgrade class.

MultiMedia Card Interface

The AT8xC5132 implements a MultiMedia Card (MMC) interface compliant to the V2.2 specification in MultiMedia Card mode. The MMC allows storage of files in removable Flash memory cards that can be easily plugged or removed from the application. It can also be used for In-System Programming.

IDE/ATAPI Interface

The AT8xC5132 provide an IDE/ATAPI interface allowing connection of devices such as CD-ROM reader, CompactFlash™ cards, Hard Disk Drive, etc. It consists of a 16-bit bidirectional bus part of the low-level ANSI ATA/ATAPI specification. It is provided for mass storage interface but could be used for In-System Programming using CD-ROM.

Serial I/O Interface

The AT89C5132 implements a serial port with its own baud rate generator providing one single synchronous communication mode and three full-duplex Universal Asynchronous Receiver Transmitter (UART) communication modes. It is provided for the following purposes:

- In System Programming.
- Remote control of the AT89C5132 by a host.

Serial Peripheral Interface

The AT89C5132 implements a Serial Peripheral Interface (SPI) supporting master and slave modes. It is provided for the following purposes:

- Remote control of the AT89C5132 by a host.
- In System Programming.

Two-wire Controller

The AT89C5132 implements a 2-wire controller supporting the four standard master and slave modes with multimaster capability. It is provided for the following purposes:

- Connection of slave devices like LCD controller, audio DAC…
- Remote control of the AT89C5132 by a host.
- In System Programming.

A/D Controller

The AT89C5132 implements a 2-channel 10-bit (8 true bits) analog to digital converter (ADC). It is provided for the following purposes:

- Battery monitoring.
- Voice recording.
- Corded remote control.

Electrical Characteristics

Absolute Maximum Ratings

Storage Temperature	-65°C to +150°C
Voltage on any other Pin to V_{SS}	-0.3 to +4.0V
I_{OL} per I/O Pin	5 mA
Power Dissipation	1 W
Ambient Temperature Under Bias	-40°C to +85°C
V_{DD}	2.7V to 3.3V

NOTE: Stressing the device beyond the “Absolute Maximum Ratings” may cause permanent damage. These are stress ratings only. Operation beyond the “operating conditions” is not recommended and extended exposure beyond the “Operating Conditions” may affect device reliability.

DC Characteristics

Digital Logic

Table 1. Digital DC Characteristics
V_{DD} = 2.7 to 3.3V , T_A = -40° to +85°C

Symbol	Parameter	Min	Typ[1]	Max	Units	Test Conditions
V_{IL}	Input Low Voltage	-0.5		$0.2 \cdot V_{DD}$ - 0.1	V	
V_{IH1}	Input High Voltage (except RST, X1)	$0.2 \cdot V_{DD}$ + 1.1		V_{DD}	V	
V_{IH2}	Input High Voltage (RST, X1)	$0.7 \cdot V_{DD}$[2]		V_{DD} + 0.5	V	
V_{OL1}	Output Low Voltage (except P0, ALE, MCMD, MDAT, MCLK, SCLK, DCLK, DSEL, DOUT)			0.45	V	I_{OL}= 1.6 mA
V_{OL2}	Output Low Voltage (P0, ALE, MCMD, MDAT, MCLK, SCLK, DCLK, DSEL, DOUT)			0.45	V	I_{OL}= 3.2 mA
V_{OH1}	Output High Voltage (P1, P2, P3, P4 and P5)	V_{DD} - 0.7			V	I_{OH}= -30 µA
V_{OH2}	Output High Voltage (P0, P2 address mode, ALE, MCMD, MDAT, MCLK, SCLK, DCLK, DSEL, DOUT, D+, D-)	V_{DD} - 0.7			V	I_{OH}= -3.2 mA
I_{IL}	Logical 0 Input Current (P1, P2, P3, P4 and P5)			-50	µA	Vin = 0.45 V

Table 1. Digital DC Characteristics
V_{DD} = 2.7 to 3.3V , T_A = -40° to +85°C

Symbol	Parameter	Min	Typ(1)	Max	Units	Test Conditions
I_{LI}	Input Leakage Current (P0, ALE, MCMD, MDAT, MCLK, SCLK, DCLK, DSEL, DOUT)			10	µA	0.45< V_{IN}< V_{DD}
I_{TL}	Logical 1 to 0 Transition Current (P1, P2, P3, P4 and P5)			-650	µA	Vin = 2.0 V
R_{RST}	Pull-Down Resistor	50	90	200	kΩ	
C_{IO}	Pin Capacitance		10		pF	T_A= 25°C
V_{RET}	V_{DD} Data Retention Limit			1.8	V	
I_{DD}	Operating Current		(3)	X1 / X2 mode 6.5 / 10.5 8 / 13.5 9.5 / 17	mA	V_{DD} < 3.3 V 12 MHz 16 MHz 20 MHz
I_{DL}	Idle Mode Current		(3)	X1 / X2 mode 5.3 / 8.1 6.4 / 10.3 7.5 / 13	mA	V_{DD} < 3.3 V 12 MHz 16 MHz 20 MHz
I_{PD}	Power-Down Mode Current		20	500	µA	V_{RET} < V_{DD} < 3.3 V

Notes: 1. Typical values are obtained using V_{DD}= 3 V and T_A= 25°C. They are not tested and there is no guarantee on these values.
2. Flash retention is guaranteed with the same formula for V_{DD} min down to 0V.
3. See Table 154 for typical consumption in player mode.

I_{DD}, I_{DL} and I_{PD} Test Conditions

Figure 1. I_{DD} Test Condition, Active Mode

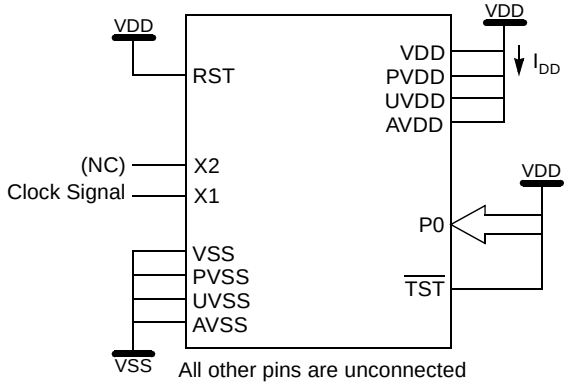

Figure 2. I_{DL} Test Condition, Idle Mode

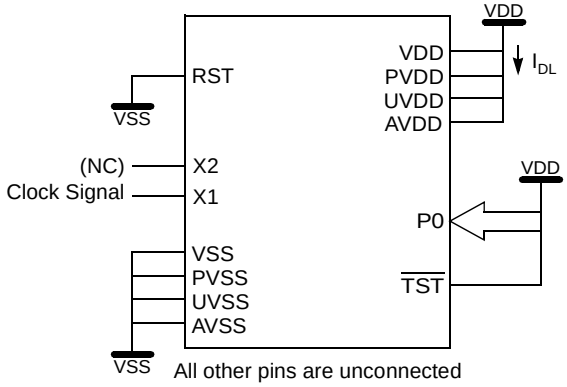

Figure 3. I_{PD} Test Condition, Power-Down Mode

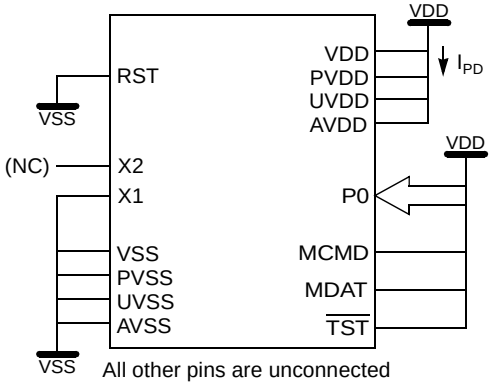

A-to-D Converter

Table 2. A-to-D Converter DC Characteristics
V_{DD} = 2.7 to 3.3V , T_A = -40°C to +85°C

Symbol	Parameter	Min	Typ	Max	Units	Test Conditions
AV_{DD}	Analog Supply Voltage	2.7		3.3	V	
AI_{DD}	Analog Operating Supply Current			600	µA	AV_{DD} = 3.3V AIN1:0 = 0 to AV_{DD}
AI_{PD}	Analog Standby Current			2	µA	AV_{DD} = 3.3V ADEN = 0 or PD = 1
AV_{IN}	Analog Input Voltage	AV_{SS}		AV_{DD}	V	
AV_{REF}	Reference Voltage A_{REFN} A_{REFP}	 AV_{SS} 2.4		 AV_{DD}	 V V	
R_{REF}	AREF Input Resistance	10		30	kΩ	T_A = 25°C
C_{IA}	Analog Input capacitance			10	pF	T_A = 25°C

Oscillator and Crystal

Schematic

Figure 4. Crystal Connection

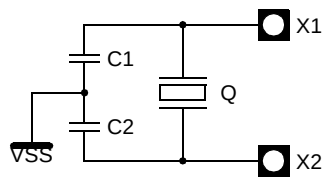

Note: For operation with most standard crystals, no external components are needed on X1 and X2. It may be necessary to add external capacitors on X1 and X2 to ground in special cases (max 10 pF). X1 and X2 may not be used to drive other circuits.

Parameters

Table 3. Oscillator and Crystal Characteristics
V_{DD} = 2.7 to 3.3V , T_A = -40° to +85°C

Symbol	Parameter	Min	Typ	Max	Unit
C_{X1}	Internal Capacitance (X1 - V_{SS})		10		pF
C_{X2}	Internal Capacitance (X2 - V_{SS})		10		pF
C_L	Equivalent Load Capacitance (X1 - X2)		5		pF
DL	Drive Level			50	µW
F	Crystal Frequency			20	MHz
RS	Crystal Series Resistance			40	Ω
CS	Crystal Shunt Capacitance			6	pF

Phase Lock Loop

Schematic

Figure 5. PLL Filter Connection

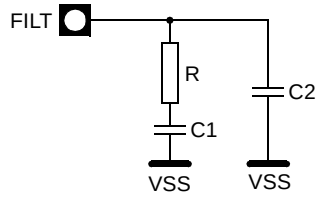

Parameters

Table 4. PLL Filter Characteristics
V_{DD} = 2.7 to 3.3V , T_A = -40° to +85°C

Symbol	Parameter	Min	Typ	Max	Unit
R	Filter Resistor		100		Ω
C1	Filter Capacitance 1		10		nF
C2	Filter Capacitance 2		2.2		nF

USB Connection

Schematic

Figure 6. USB Connection

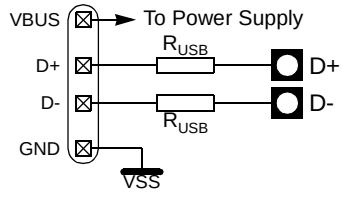

Parameters

Table 1. USB Termination Characteristics

V_{DD} = 2.7 to 3.3 V, T_A = -40 to +85°C

Symbol	Parameter	Min	Typ	Max	Unit
R_{USB}	USB Termination Resistor		27		Ω

In-system Programming

Schematic

Figure 7. ISP Pull-down Connection

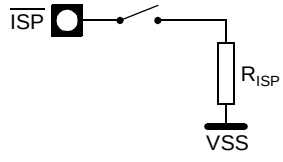

Parameters

Table 5. ISP Pull-Down Characteristics
V_{DD} = 2.7 to 3.3V , T_A = -40° to +85°C

Symbol	Parameter	Min	Typ	Max	Unit
R_{ISP}	ISP Pull-Down Resistor		2.2		kΩ

AC Characteristics

External 8-bit Bus Cycles

Definition of Symbols

Table 1. External 8-bit Bus Cycles Timing Symbol Definitions

Signals	
A	Address
D	Data In
L	ALE
Q	Data Out
R	$\overline{RD}$
W	$\overline{WR}$

Conditions	
H	High
L	Low
V	Valid
X	No Longer Valid
Z	Floating

Timings

Test conditions: capacitive load on all pins = 50 pF.

Table 2. External 8-bit Bus Cycle – Data Read AC Timings
V_{DD} = 2.7 to 3.3V, T_A = -40° to +85°C

Symbol	Parameter	Variable Clock Standard Mode		Variable Clock X2 Mode		Unit
		Min	Max	Min	Max	
T_{CLCL}	Clock Period	50		50		ns
T_{LHLL}	ALE Pulse Width	$2 \cdot T_{CLCL}$-15		T_{CLCL}-15		ns
T_{AVLL}	Address Valid to ALE Low	T_{CLCL}-20		$0.5 \cdot T_{CLCL}$-20		ns
T_{LLAX}	Address hold after ALE Low	T_{CLCL}-20		$0.5 \cdot T_{CLCL}$-20		ns
T_{LLRL}	ALE Low to $\overline{RD}$ Low	$3 \cdot T_{CLCL}$-30		$1.5 \cdot T_{CLCL}$-30		ns
T_{RLRH}	$\overline{RD}$ Pulse Width	$6 \cdot T_{CLCL}$-25		$3 \cdot T_{CLCL}$-25		ns
T_{RHLH}	$\overline{RD}$ high to ALE High	T_{CLCL}-20	T_{CLCL}+20	$0.5 \cdot T_{CLCL}$-20	$0.5 \cdot T_{CLCL}$+20	ns
T_{AVDV}	Address Valid to Valid Data In		$9 \cdot T_{CLCL}$-65		$4.5 \cdot T_{CLCL}$-65	ns
T_{AVRL}	Address Valid to $\overline{RD}$ Low	$4 \cdot T_{CLCL}$-30		$2 \cdot T_{CLCL}$-30		ns
T_{RLDV}	$\overline{RD}$ Low to Valid Data		$5 \cdot T_{CLCL}$-30		$2.5 \cdot T_{CLCL}$-30	ns
T_{RLAZ}	$\overline{RD}$ Low to Address Float		0		0	ns
T_{RHDX}	Data Hold After $\overline{RD}$ High	0		0		ns
T_{RHDZ}	Instruction Float After $\overline{RD}$ High		$2 \cdot T_{CLCL}$-25		T_{CLCL}-25	ns

Table 3. External 8-bit Bus Cycle – Data Write AC Timings
V_{DD} = 2.7 to 3.3V, T_A = -40° to +85°C

Symbol	Parameter	Variable Clock Standard Mode		Variable Clock X2 Mode		Unit
		Min	Max	Min	Max	
T_{CLCL}	Clock Period	50		50		ns
T_{LHLL}	ALE Pulse Width	$2 \cdot T_{CLCL}$-15		T_{CLCL}-15		ns
T_{AVLL}	Address Valid to ALE Low	T_{CLCL}-20		$0.5 \cdot T_{CLCL}$-20		ns
T_{LLAX}	Address hold after ALE Low	T_{CLCL}-20		$0.5 \cdot T_{CLCL}$-20		ns
T_{LLWL}	ALE Low to $\overline{WR}$ Low	$3 \cdot T_{CLCL}$-30		$1.5 \cdot T_{CLCL}$-30		ns
T_{WLWH}	$\overline{WR}$ Pulse Width	$6 \cdot T_{CLCL}$-25		$3 \cdot T_{CLCL}$-25		ns
T_{WHLH}	$\overline{WR}$ High to ALE High	T_{CLCL}-20	T_{CLCL}+20	$0.5 \cdot T_{CLCL}$-20	$0.5 \cdot T_{CLCL}$+20	ns
T_{AVWL}	Address Valid to $\overline{WR}$ Low	$4 \cdot T_{CLCL}$-30		$2 \cdot T_{CLCL}$-30		ns
T_{QVWH}	Data Valid to $\overline{WR}$ High	$7 \cdot T_{CLCL}$-20		$3.5 \cdot T_{CLCL}$-20		ns
T_{WHQX}	Data Hold after $\overline{WR}$ High	T_{CLCL}-15		$0.5 \cdot T_{CLCL}$-15		ns

Waveforms

Figure 1. External 8-bit Bus Cycle – Data Read Waveforms

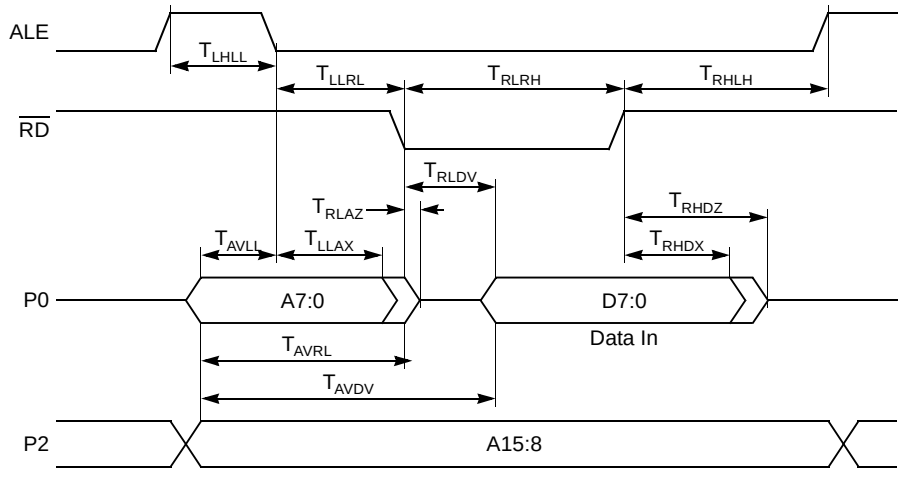

Figure 2. External 8-bit Bus Cycle – Data Write Waveforms

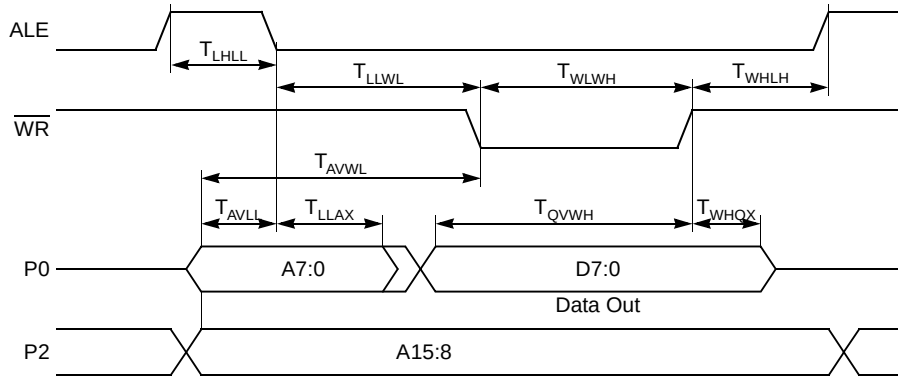

External IDE 16-bit Bus Cycles

Definition of Symbols

Table 4. External IDE 16-bit Bus Cycles Timing Symbol Definitions

Signals	
A	Address
D	Data In
L	ALE
Q	Data Out
R	$\overline{RD}$
W	$\overline{WR}$

Conditions	
H	High
L	Low
V	Valid
X	No Longer Valid
Z	Floating

Timings

Test conditions: capacitive load on all pins = 50 pF.

Table 5. External IDE 16-bit Bus Cycle – Data Read AC Timings
V_{DD} = 2.7 to 3.3V, T_A = -40° to +85°C

Symbol	Parameter	Variable Clock Standard Mode		Variable Clock X2 Mode		Unit
		Min	Max	Min	Max	
T_{CLCL}	Clock Period	50		50		ns
T_{LHLL}	ALE Pulse Width	$2 \cdot T_{CLCL}$-15		T_{CLCL}-15		ns
T_{AVLL}	Address Valid to ALE Low	T_{CLCL}-20		$0.5 \cdot T_{CLCL}$-20		ns
T_{LLAX}	Address hold after ALE Low	T_{CLCL}-20		$0.5 \cdot T_{CLCL}$-20		ns
T_{LLRL}	ALE Low to $\overline{RD}$ Low	$3 \cdot T_{CLCL}$-30		$1.5 \cdot T_{CLCL}$-30		ns
T_{RLRH}	$\overline{RD}$ Pulse Width	$6 \cdot T_{CLCL}$-25		$3 \cdot T_{CLCL}$-25		ns
T_{RHLH}	$\overline{RD}$ high to ALE High	T_{CLCL}-20	T_{CLCL}+20	$0.5 \cdot T_{CLCL}$-20	$0.5 \cdot T_{CLCL}$+20	ns
T_{AVDV}	Address Valid to Valid Data In		$9 \cdot T_{CLCL}$-65		$4.5 \cdot T_{CLCL}$-65	ns
T_{AVRL}	Address Valid to $\overline{RD}$ Low	$4 \cdot T_{CLCL}$-30		$2 \cdot T_{CLCL}$-30		ns
T_{RLDV}	$\overline{RD}$ Low to Valid Data		$5 \cdot T_{CLCL}$-30		$2.5 \cdot T_{CLCL}$-30	ns
T_{RLAZ}	$\overline{RD}$ Low to Address Float		0		0	ns
T_{RHDX}	Data Hold After $\overline{RD}$ High	0		0		ns
T_{RHDZ}	Instruction Float After $\overline{RD}$ High		$2 \cdot T_{CLCL}$-25		T_{CLCL}-25	ns

Table 6. External IDE 16-bit Bus Cycle – Data Write AC Timings
V_{DD} = 2.7 to 3.3V, T_A = -40° to +85°C

Symbol	Parameter	Variable Clock Standard Mode		Variable Clock X2 Mode		Unit
		Min	Max	Min	Max	
T_{CLCL}	Clock Period	50		50		ns
T_{LHLL}	ALE Pulse Width	$2 \cdot T_{CLCL}$-15		T_{CLCL}-15		ns
T_{AVLL}	Address Valid to ALE Low	T_{CLCL}-20		$0.5 \cdot T_{CLCL}$-20		ns
T_{LLAX}	Address hold after ALE Low	T_{CLCL}-20		$0.5 \cdot T_{CLCL}$-20		ns
T_{LLWL}	ALE Low to $\overline{WR}$ Low	$3 \cdot T_{CLCL}$-30		$1.5 \cdot T_{CLCL}$-30		ns
T_{WLWH}	$\overline{WR}$ Pulse Width	$6 \cdot T_{CLCL}$-25		$3 \cdot T_{CLCL}$-25		ns
T_{WHLH}	$\overline{WR}$ High to ALE High	T_{CLCL}-20	T_{CLCL}+20	$0.5 \cdot T_{CLCL}$-20	$0.5 \cdot T_{CLCL}$+20	ns
T_{AVWL}	Address Valid to $\overline{WR}$ Low	$4 \cdot T_{CLCL}$-30		$2 \cdot T_{CLCL}$-30		ns
T_{QVWH}	Data Valid to $\overline{WR}$ High	$7 \cdot T_{CLCL}$-20		$3.5 \cdot T_{CLCL}$-20		ns
T_{WHQX}	Data Hold after $\overline{WR}$ High	T_{CLCL}-15		$0.5 \cdot T_{CLCL}$-15		ns

Waveforms

Figure 3. External IDE 16-bit Bus Cycle – Data Read Waveforms

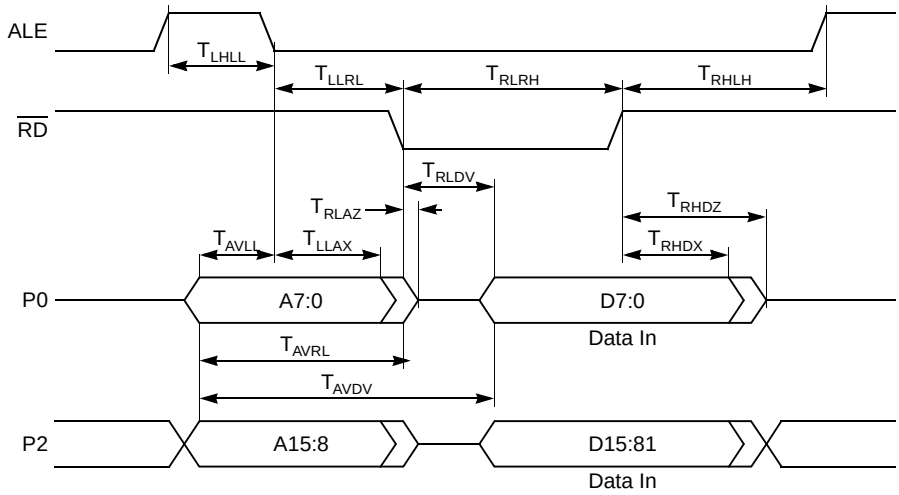

Note: D15:8 is written in DAT16H SFR.

Figure 4. External IDE 16-bit Bus Cycle – Data Write Waveforms

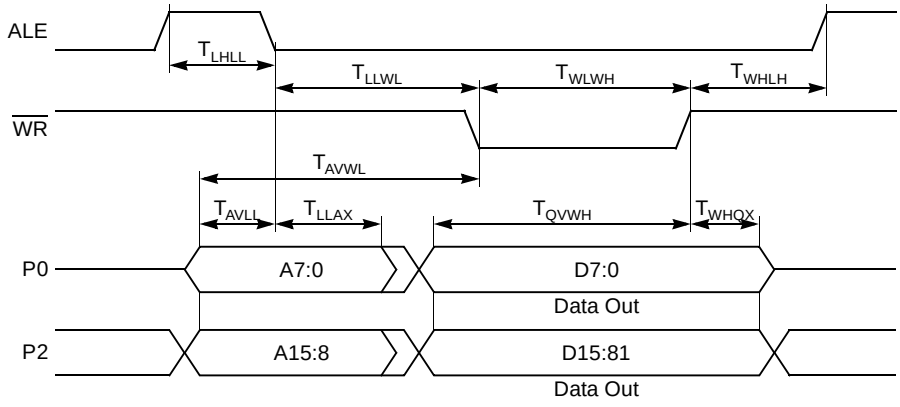

Note: D15:8 is the content of DAT16H SFR.

SPI Interface

Definition of Symbols

Table 7. SPI Interface Timing Symbol Definitions

Signals	
C	Clock
I	Data In
O	Data Out

Conditions	
H	High
L	Low
V	Valid
X	No Longer Valid
Z	Floating

Timings

Table 8. SPI Interface Master AC Timing
V_{DD} = 2.7 to 3.3V, T_A = -40° to +85°C

Symbol	Parameter	Min	Max	Unit
Slave Mode				
T_{CHCH}	Clock Period	8		T_{OSC}
T_{CHCX}	Clock High Time	3.2		T_{OSC}
T_{CLCX}	Clock Low Time	3.2		T_{OSC}
T_{SLCH}, T_{SLCL}	$\overline{SS}$ Low to Clock edge	200		ns
T_{IVCL}, T_{IVCH}	Input Data Valid to Clock Edge	100		ns
T_{CLIX}, T_{CHIX}	Input Data Hold after Clock Edge	100		ns
$T_{CLOV,}$ T_{CHOV}	Output Data Valid after Clock Edge		100	ns
T_{CLOX}, T_{CHOX}	Output Data Hold Time after Clock Edge	0		ns
T_{CLSH}, T_{CHSH}	$\overline{SS}$ High after Clock Edge	0		ns
T_{IVCL}, T_{IVCH}	Input Data Valid to Clock Edge	100		ns
T_{CLIX}, T_{CHIX}	Input Data Hold after Clock Edge	100		ns
T_{SLOV}	$\overline{SS}$ Low to Output Data Valid		130	ns
T_{SHOX}	Output Data Hold after $\overline{SS}$ High		130	ns
T_{SHSL}	$\overline{SS}$ High to $\overline{SS}$ Low	(1)		
T_{ILIH}	Input Rise Time		2	µs
T_{IHIL}	Input Fall Time		2	µs
T_{OLOH}	Output Rise Time		100	ns
T_{OHOL}	Output Fall Time		100	ns
Master Mode				
T_{CHCH}	Clock Period	4		T_{OSC}
T_{CHCX}	Clock High Time	1.6		T_{OSC}
T_{CLCX}	Clock Low Time	1.6		T_{OSC}
T_{IVCL}, T_{IVCH}	Input Data Valid to Clock Edge	50		ns
T_{CLIX}, T_{CHIX}	Input Data Hold after Clock Edge	50		ns
$T_{CLOV,}$ T_{CHOV}	Output Data Valid after Clock Edge		65	ns
T_{CLOX}, T_{CHOX}	Output Data Hold Time after Clock Edge	0		ns
T_{ILIH}	Input Data Rise Time		2	µs
T_{IHIL}	Input Data Fall Time		2	µs
T_{OLOH}	Output Data Rise Time		50	ns
T_{OHOL}	Output Data Fall Time		50	ns

Notes: 1. Value of this parameter depends on software.
2. Test conditions: capacitive load on all pins = 100 pF

Waveforms

Figure 5. SPI Slave Waveforms (SSCPHA = 0)

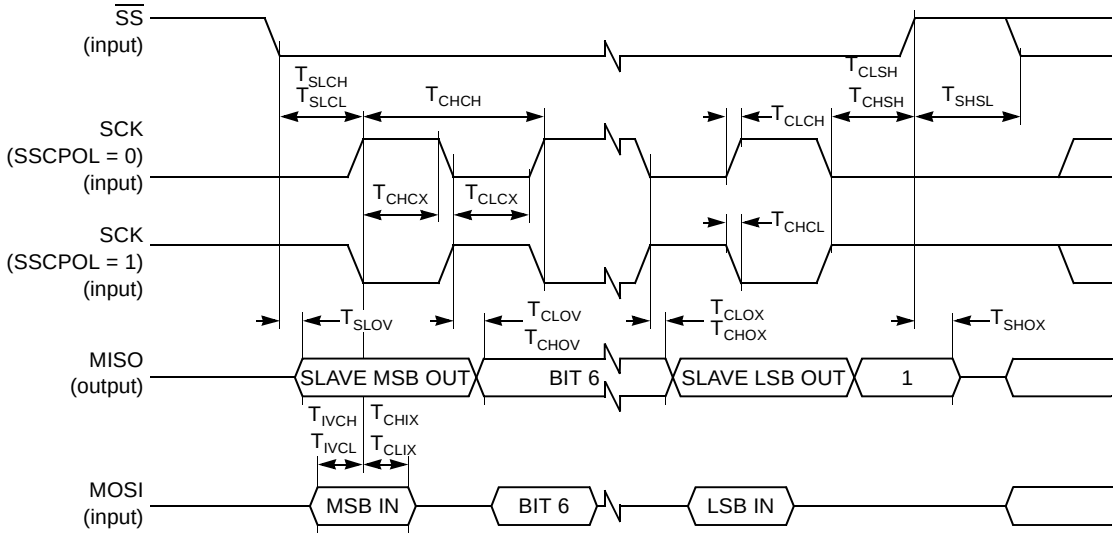

Note: 1. Not Defined but generally the MSB of the character which has just been received.

Figure 6. SPI Slave Waveforms (SSCPHA = 1)

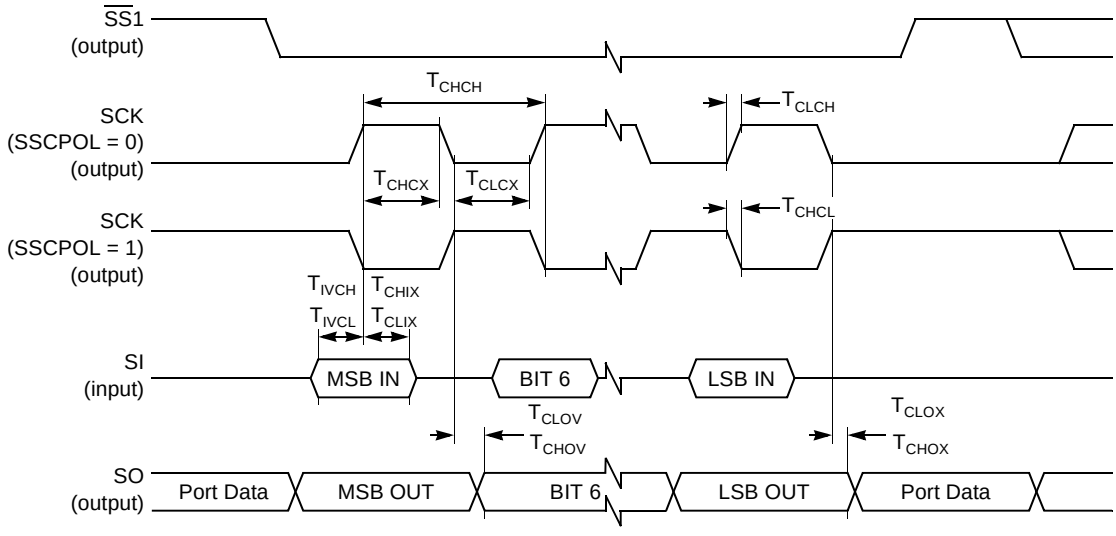

Note: 1. Not Defined but generally the LSB of the character which has just been received.

Figure 7. SPI Master Waveforms (SSCPHA = 0)

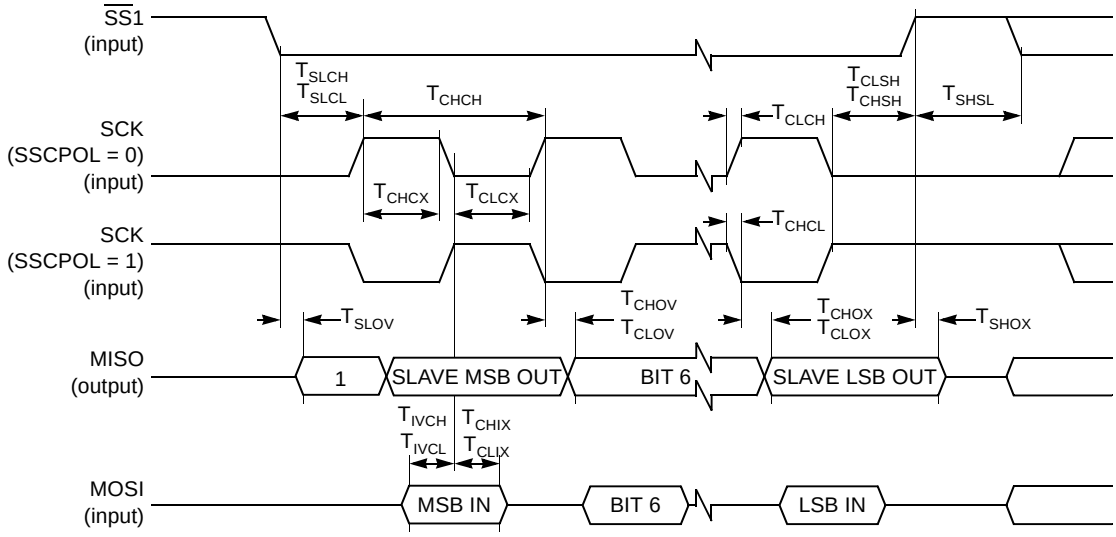

Note: 1. $\overline{SS}$ handled by software using general purpose port pin.

Figure 8. SPI Master Waveforms (SSCPHA = 1)

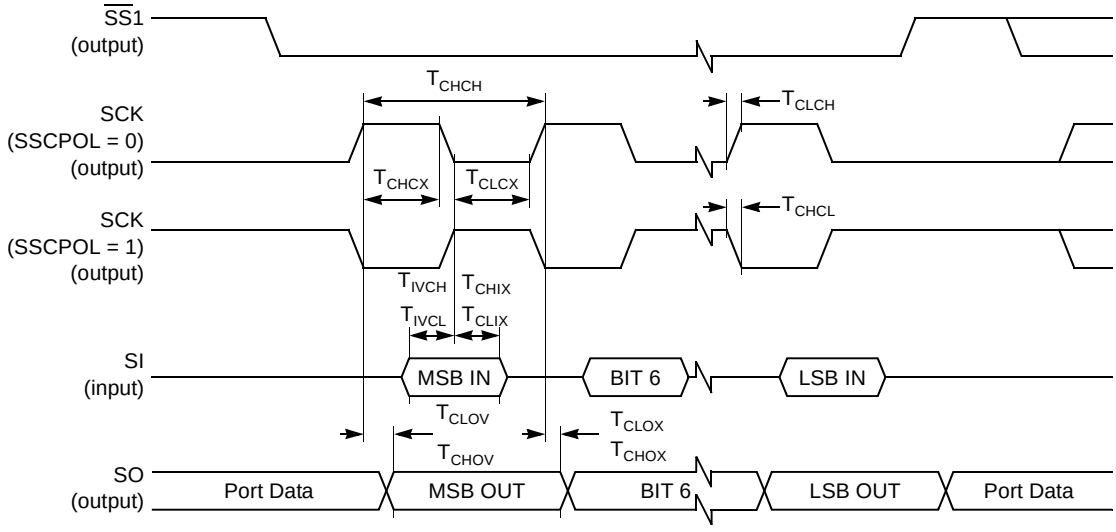

Note: 1. $\overline{SS}$ handled by software using general purpose port pin.

Two-wire Interface

Timings

Table 1. TWI Interface AC Timing

V_{DD} = 2.7 to 3.3 V, T_A = -40 to +85°C

Symbol	Parameter	INPUT Min Max	OUTPUT Min Max
T_{HD}; STA	Start condition hold time	14·T_{CLCL}(4)	4.0 µs(1)
T_{LOW}	SCL low time	16·T_{CLCL}(4)	4.7 µs(1)
T_{HIGH}	SCL high time	14·T_{CLCL}(4)	4.0 µs(1)
T_{RC}	SCL rise time	1 µs	-(2)
T_{FC}	SCL fall time	0.3 µs	0.3 µs(3)
T_{SU}; DAT1	Data set-up time	250 ns	20·T_{CLCL}(4)- T_{RD}
T_{SU}; DAT2	SDA set-up time (before repeated START condition)	250 ns	1 µs(1)
T_{SU}; DAT3	SDA set-up time (before STOP condition)	250 ns	8·T_{CLCL}(4)
T_{HD}; DAT	Data hold time	0 ns	8·T_{CLCL}(4) - T_{FC}
T_{SU}; STA	Repeated START set-up time	14·T_{CLCL}(4)	4.7 µs(1)
T_{SU}; STO	STOP condition set-up time	14·T_{CLCL}(4)	4.0 µs(1)
T_{BUF}	Bus free time	14·T_{CLCL}(4)	4.7 µs(1)
T_{RD}	SDA rise time	1 µs	-(2)
T_{FD}	SDA fall time	0.3 µs	0.3 µs(3)

Notes:
1. At 100 kbit/s. At other bit-rates this value is inversely proportional to the bit-rate of 100 kbit/s.
2. Determined by the external bus-line capacitance and the external bus-line pull-up resistor, this must be < 1 µs.
3. Spikes on the SDA and SCL lines with a duration of less than 3·T_{CLCL} will be filtered out. Maximum capacitance on bus-lines SDA and SCL= 400 pF.
4. T_{CLCL}= T_{OSC}= one oscillator clock period.

Waveforms

Figure 9. Two Wire Waveforms

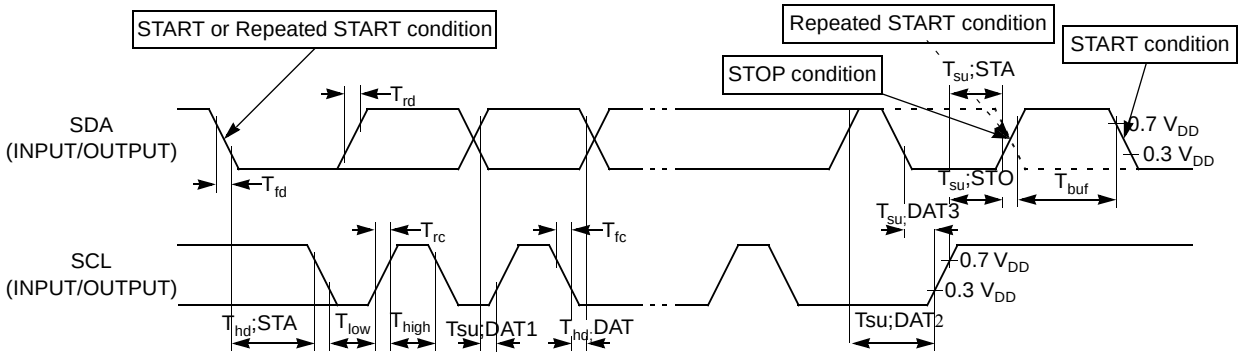

MMC Interface

Definition of Symbols

Table 9. MMC Interface Timing Symbol Definitions

Signals	
C	Clock
D	Data In
O	Data Out

Conditions	
H	High
L	Low
V	Valid
X	No Longer Valid

Timings

Table 10. MMC Interface AC Timings

V_{DD} = 2.7 to 3.3 V, T_A = -40 to +85°C, CL ≤ 100pF (10 cards)

Symbol	Parameter	Min	Max	Unit
T_{CHCH}	Clock Period	50		ns
T_{CHCX}	Clock High Time	10		ns
T_{CLCX}	Clock Low Time	10		ns
T_{CLCH}	Clock Rise Time		10	ns
T_{CHCL}	Clock Fall Time		10	ns
T_{DVCH}	Input Data Valid to Clock High	3		ns
T_{CHDX}	Input Data Hold after Clock High	3		ns
T_{CHOX}	Output Data Hold after Clock High	5		ns
T_{OVCH}	Output Data Valid to Clock High	5		ns

Waveforms

Figure 10. MMC Input Output Waveforms

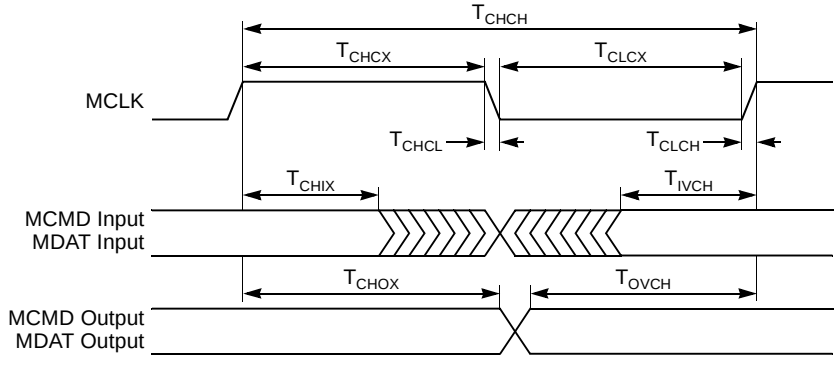

Audio Interface

Definition of Symbols

Table 11. Audio Interface Timing Symbol Definitions

Signals	
C	Clock
O	Data Out
S	Data Select

Conditions	
H	High
L	Low
V	Valid
X	No Longer Valid

Timings

Table 12. Audio Interface AC timings

V_{DD} = 2.7 to 3.3V, T_A = -40 to +85°C, CL ≤ 30pF

Symbol	Parameter	Min	Max	Unit
T_{CHCH}	Clock Period		325.5(1)	ns
T_{CHCX}	Clock High Time	30		ns
T_{CLCX}	Clock Low Time	30		ns
T_{CLCH}	Clock Rise Time		10	ns
T_{CHCL}	Clock Fall Time		10	ns
T_{CLSV}	Clock Low to Select Valid		10	ns
T_{CLOV}	Clock Low to Data Valid		10	ns

Note: 32-bit format with Fs = 48 kHz.

Waveforms

Figure 11. Audio Interface Waveforms

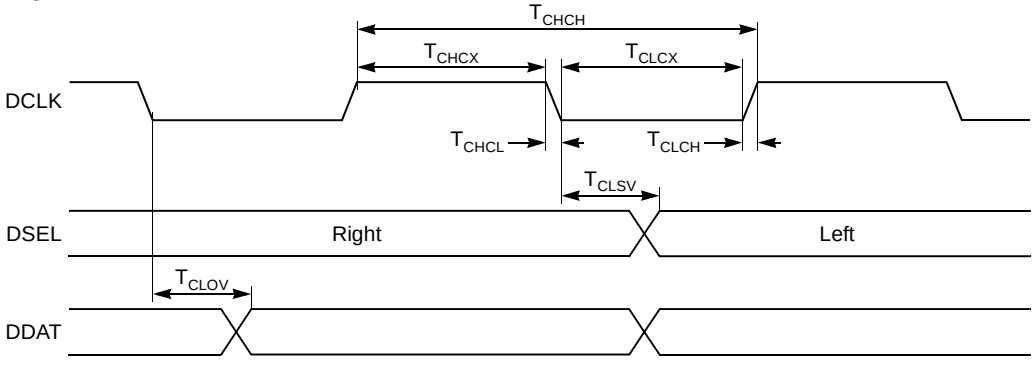

Analog to Digital Converter

Definition of Symbols

Table 13. Analog to Digital Converter Timing Symbol Definitions

Signals	
C	Clock
E	Enable (ADEN bit)
S	Start Conversion (ADSST bit)

Conditions	
H	High
L	Low

Characteristics

Table 2. Analog to Digital Converter AC Characteristics

V_{DD} = 2.7 to 3.3 V, T_A = -40 to +85°C

Symbol	Parameter	Min	Max	Unit
T_{CLCL}	Clock Period	4		µs
T_{EHSH}	Start-up Time		4	µs
T_{SHSL}	Conversion Time		$11 \cdot T_{CLCL}$	µs
DLe	Differential non-linearity error(1)(2)		1	LSB
ILe	Integral non-linearity errorss(1)(3)		2	LSB
OSe	Offset error(1)(4)		4	LSB
Ge	Gain error(1)(5)		4	LSB

Notes:
1. AV_{DD}= AV_{REFP}= 3.0 V, AV_{SS}= AV_{REFN}= 0 V. ADC is monotonic with no missing code.
2. The differential non-linearity is the difference between the actual step width and the ideal step width (see Figure 23).
3. The integral non-linearity is the peak difference between the center of the actual step and the ideal transfer curve after appropriate adjustment of gain and offset errors (see Figure 23).
4. The offset error is the absolute difference between the straight line which fits the actual transfer curve (after removing of gain error), and the straight line which fits the ideal transfer curve (see Figure 23).
5. The gain error is the relative difference in percent between the straight line which fits the actual transfer curve (after removing of offset error), and the straight line which fits the ideal transfer curve (see Figure 23).

Waveforms

Figure 12. Analog-to-Digital Converter Internal Waveforms

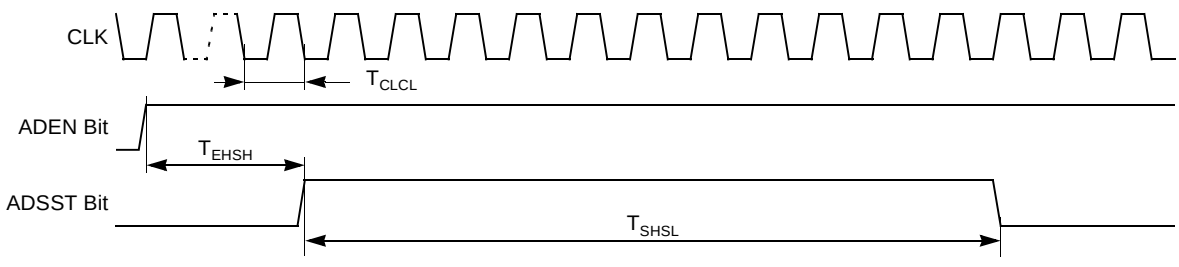

Figure 13. Analog-to-Digital Converter Characteristics

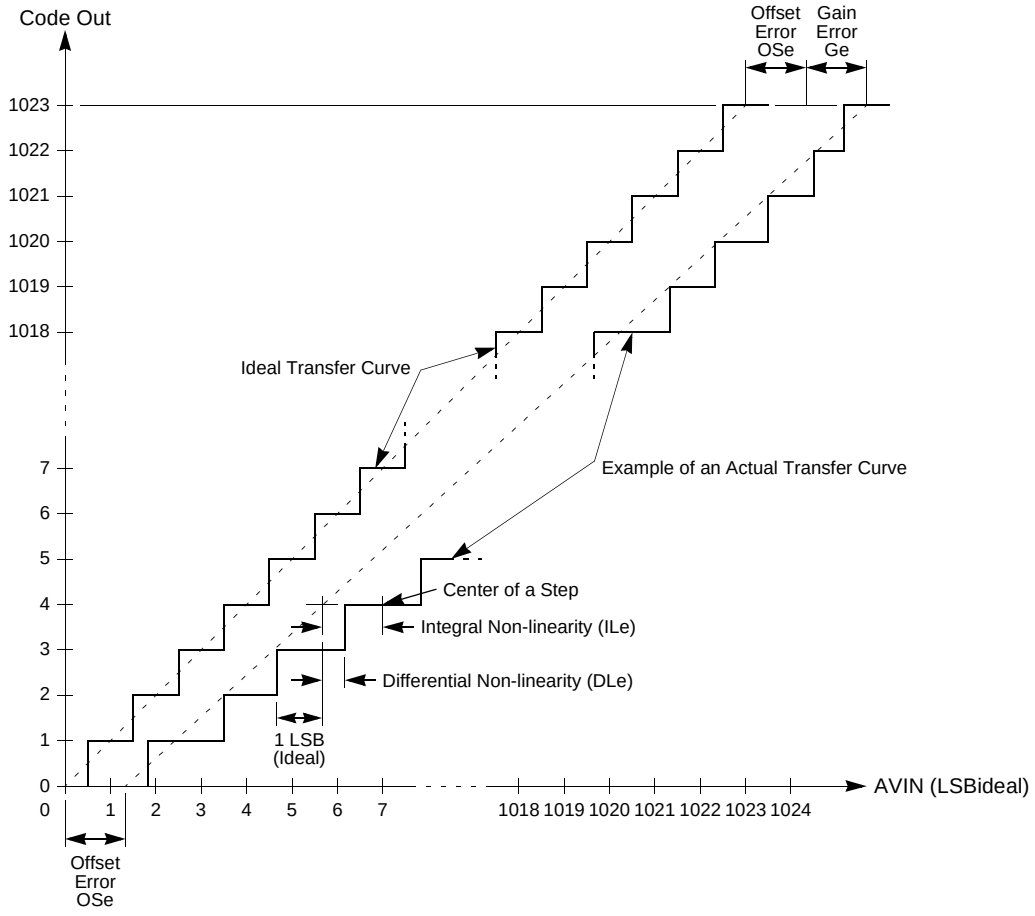

Flash Memory

Definition of Symbols

Table 14. Flash Memory Timing Symbol Definitions

Signals	
S	$\overline{ISP}$
R	RST
B	FBUSY flag

Conditions	
L	Low
V	Valid
X	No Longer Valid

Timings

Table 15. Flash Memory AC Timing

V_{DD} = 2.7 to 3.3V, T_A = -40° to +85°C

Symbol	Parameter	Min	Typ	Max	Unit
T_{SVRL}	Input $\overline{ISP}$ Valid to RST Edge	50			ns
T_{RLSX}	Input $\overline{ISP}$ Hold after RST Edge	50			ns
T_{BHBL}	FLASH Internal Busy (Programming) Time		10		ms
N_{FCY}	Number of Flash Write Cycles	100K			Cycle
T_{FDR}	Flash Data Retention Time	10			Year

Waveforms

Figure 14. Flash Memory – ISP Waveforms

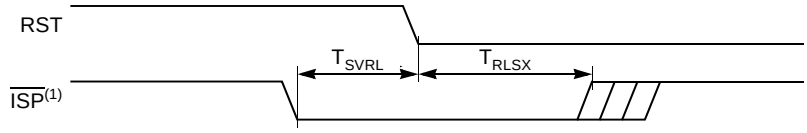

Note: 1. $\overline{ISP}$ must be driven through a pull-down resistor (see Section "In-system Programming", page 22).

Figure 15. Flash Memory – Internal Busy Waveforms

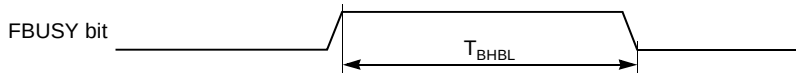

External Clock Drive and Logic Level References

Definition of Symbols

Table 16. External Clock Timing Symbol Definitions

Signals	
C	Clock

Conditions	
H	High
L	Low
X	No Longer Valid

Timings

Table 17. External Clock AC Timings

V_{DD} = 2.7 to 3.3V, T_A= -40 to +85°C

Symbol	Parameter	Min	Max	Unit
T_{CLCL}	Clock Period	50		ns
T_{CHCX}	High Time	10		ns
T_{CLCX}	Low Time	10		ns
T_{CLCH}	Rise Time	3		ns
T_{CHCL}	Fall Time	3		ns
T_{CR}	Cyclic Ratio in X2 Mode	40	60	%

Waveforms

Figure 16. External Clock Waveform

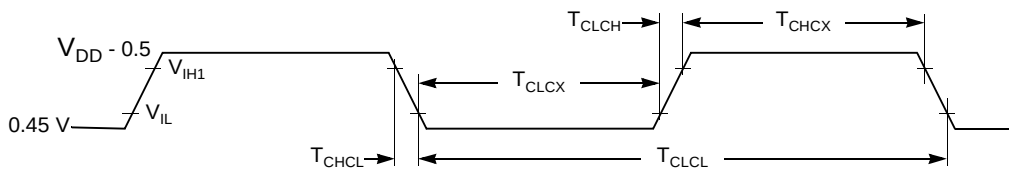

Figure 17. AC Testing Input/Output Waveforms

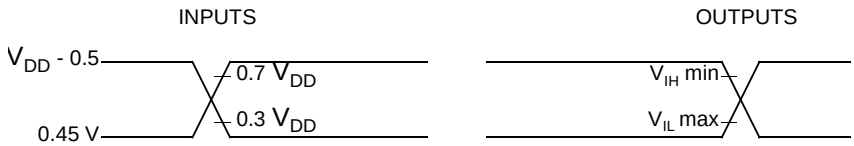

Notes: 1. During AC testing, all inputs are driven at V_{DD} -0.5V for a logic 1 and 0.45V for a logic 0.
2. Timing measurements are made on all outputs at V_{IH} min for a logic 1 and V_{IL} max for a logic 0.

Figure 18. Float Waveforms

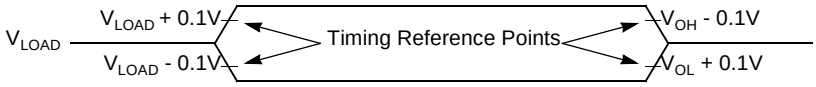

Note: For timing purposes, a port pin is no longer floating when a 100 mV change from load voltage occurs and begins to float when a 100 mV change from the loading V_{OH}/V_{OL} level occurs with $I_{OL}/I_{OH} = \pm 20$ mA.

Ordering Information

Possible Order Entries[1]

Part Number	Memory Size (Bytes)	Supply Voltage	Temperature Range	Max Frequency (MHz)	Package	Packing	Product Marking
AT89C5132-ROTIL	64K Flash	3V	Industrial	40	TQFP80	Tray	895132-IL

Note: 1. PLCC84 package only available for development board.

Package Information

TQFP80

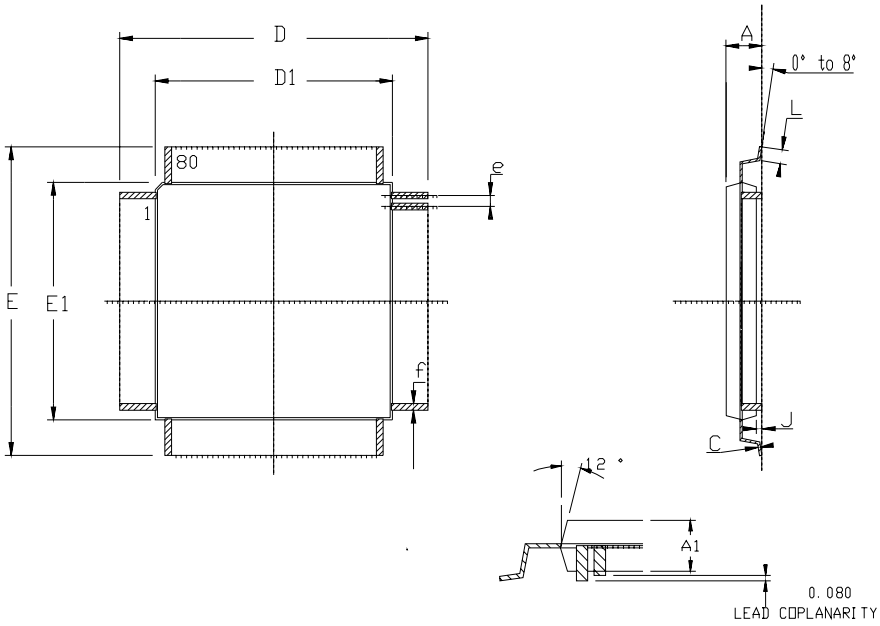

	MM		INCH	
	Min	Max	Min	Max
A	1.40	1.60	.055	.063
A1	1.35	1.45	.053	.057
C	0.17 BSC		.007 BSC	
D	15.80	16.20	.622	.638
D1	13.90	14.10	.547	.555
E	15.80	16.20	.622	.638
E1	13.90	14.10	.547	.555
J	0.05	0.15	.002	.006
L	0.45	0.75	.018	.030
e	0.65 BSC		.0256 BSC	
f	0.30 BSC		.012 BSC	

PLCC84

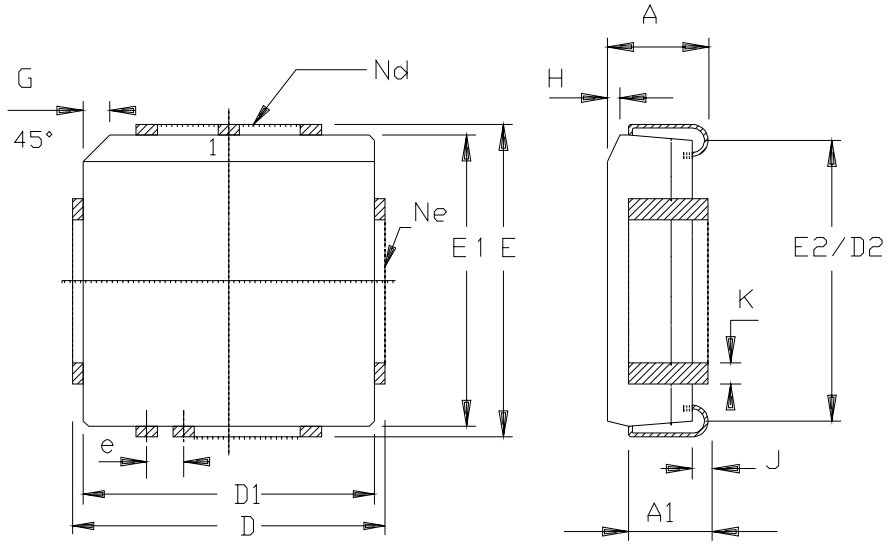

	MM		INCH	
A	4.20	5.08	.165	.200
A1	2.29	3.30	.090	.130
D	30.10	30.35	1.185	1.195
D1	29.21	29.41	1.150	1.158
D2	27.69	28.70	1.090	1.130
E	30.10	30.35	1.185	1.195
E1	29.21	29.41	1.150	1.158
E2	27.69	28.70	1.090	1.130
e	1.27	BSC	.050	BSC
G	1.07	1.22	.042	.048
H	1.07	1.42	.042	.056
J	0.51	-	.020	-
K	0.33	0.53	.013	.021
Nd	21		21	
Ne	21		21	
PKG STD	00			

Datasheet Change Log for AT89C5132

Changes from 4173A-08/02 to 4173B-03/04

1. Supression of ROM product version.
2. Supression of TQFP64 package.

Changes from 4173B-03/04 - 4173C - 07/04

1. Add USB connection schematic in USB section.
2. Add USB termination characteristics in DC Characteristics section.
3. Page access mode clarification in Data Memory section.

Atmel Corporation

2325 Orchard Parkway
San Jose, CA 95131
Tel: 1(408) 441-0311
Fax: 1(408) 487-2600

Regional Headquarters

Europe
Atmel Sarl
Route des Arsenaux 41
Case Postale 80
CH-1705 Fribourg
Switzerland
Tel: (41) 26-426-5555
Fax: (41) 26-426-5500

Asia
Room 1219
Chinachem Golden Plaza
77 Mody Road Tsimshatsui
East Kowloon
Hong Kong
Tel: (852) 2721-9778
Fax: (852) 2722-1369

Japan
9F, Tonetsu Shinkawa Bldg.
1-24-8 Shinkawa
Chuo-ku, Tokyo 104-0033
Japan
Tel: (81) 3-3523-3551
Fax: (81) 3-3523-7581

Atmel Operations

Memory
2325 Orchard Parkway
San Jose, CA 95131
Tel: 1(408) 441-0311
Fax: 1(408) 436-4314

Microcontrollers
2325 Orchard Parkway
San Jose, CA 95131
Tel: 1(408) 441-0311
Fax: 1(408) 436-4314

La Chantrerie
BP 70602
44306 Nantes Cedex 3, France
Tel: (33) 2-40-18-18-18
Fax: (33) 2-40-18-19-60

ASIC/ASSP/Smart Cards
Zone Industrielle
13106 Rousset Cedex, France
Tel: (33) 4-42-53-60-00
Fax: (33) 4-42-53-60-01

1150 East Cheyenne Mtn. Blvd.
Colorado Springs, CO 80906
Tel: 1(719) 576-3300
Fax: 1(719) 540-1759

Scottish Enterprise Technology Park
Maxwell Building
East Kilbride G75 0QR, Scotland
Tel: (44) 1355-803-000
Fax: (44) 1355-242-743

RF/Automotive
Theresienstrasse 2
Postfach 3535
74025 Heilbronn, Germany
Tel: (49) 71-31-67-0
Fax: (49) 71-31-67-2340

1150 East Cheyenne Mtn. Blvd.
Colorado Springs, CO 80906
Tel: 1(719) 576-3300
Fax: 1(719) 540-1759

Biometrics/Imaging/Hi-Rel MPU/ High Speed Converters/RF Datacom
Avenue de Rochepleine
BP 123
38521 Saint-Egreve Cedex, France
Tel: (33) 4-76-58-30-00
Fax: (33) 4-76-58-34-80

e-mail
literature@atmel.com

Web Site
http://www.atmel.com

Disclaimer: Atmel Corporation makes no warranty for the use of its products, other than those expressly contained in the Company's standard warranty which is detailed in Atmel's Terms and Conditions located on the Company's web site. The Company assumes no responsibility for any errors which may appear in this document, reserves the right to change devices or specifications detailed herein at any time without notice, and does not make any commitment to update the information contained herein. No licenses to patents or other intellectual property of Atmel are granted by the Company in connection with the sale of Atmel products, expressly or by implication. Atmel's products are not authorized for use as critical components in life support devices or systems.

© Atmel Corporation 2004. **All rights reserved.** Atmel® and combinations thereof are the registered trademarks of Atmel Corporation or its subsidiaries. Other terms and product names may be the trademarks of others.

Printed on recycled paper.

4173CS–USB–07/04 /0M

О компании

ООО "ТрейдЭлектроникс" - это оперативные поставки широкого спектра электронных компонентов отечественного и импортного производства напрямую от производителей и с крупнейших мировых складов. Реализуемая нашей компанией продукция насчитывает более полумиллиона наименований.

Благодаря этому наша компания предлагает к поставке практически не ограниченный ассортимент компонентов как оптовыми, мелкооптовыми партиями, так и в розницу.

Наличие собственной эффективной системы логистики обеспечивает надежную поставку продукции по конкурентным ценам в точно указанные сроки.

Срок поставки со стоков в **Европе и Америке – от 3 до 14 дней.**

Срок поставки из **Азии – от 10 дней.**

Благодаря развитой сети поставщиков, помогаем в поиске и приобретении экзотичных или снятых с производства компонентов.

Предоставляем спец цены на элементы для создания инженерных сэмплов.

Упорный труд, качественный результат дают нам право быть уверенными в себе и надежными для наших клиентов.

Наша компания это:

- Гарантия качества поставляемой продукции
- Широкий ассортимент
- Минимальные сроки поставок
- Техническая поддержка
- Подбор комплектации
- Индивидуальный подход
- Гибкое ценообразование

Наша организация особенно сильна в поставках модулей, микросхем, пассивных компонентов, ксайленсах (XC), EPF, EPM и силовой электроники.

Большой выбор предлагаемой продукции, различные виды оплаты и доставки, позволят Вам сэкономить время и получить максимум выгоды от сотрудничества с нами!

Trade Electronics.ru

гарантия бесперебойности производства и качества выпускаемой продукции

Перечень производителей, продукцию которых мы поставляем на российский рынок

AMD
ANALOG DEVICES
BOURNS
Coilcraft
élantec Semiconductor, Inc.
HARRIS
Infineon
JRC
MICREL
MOTOROLA
nichicon
PHILIPS
ROHM
SGS-THOMSON
Sipex
TAIYO YUDEN
TOKO
ZILOG
Winbond
Allegro
ATMEL
BURR - BROWN
EXAR
HITACHI
intel
Lattice
muRata
OKI
QUALCOMM
SAMSUNG
SHARP
SONY
TDK
TOSHIBA
KYOCERA
ALTERA
AVX
CITILYST
CYPRESS
FAIRCHILD SEMICONDUCTOR
HOLTEK
International IOR Rectifier
LINEAR TECHNOLOGY
MITSUBISHI
National Semiconductor
ON Semiconductor
REALTEK
SANYO
SHINDENGEN
SGS
TECCOR
TUNDRA
XILINX
Amphenol
Bay Linear
CIRRUS LOGIC
DALLAS
FUJITSU
IDT
intersil
MAXIM
molex
NEC
Panasonic
RENESAS
SII
SIEMENS
ST
Texas Instruments
VISHAY
ZETEX SEMICONDUCTORS

Trade Electronics.ru

гарантия бесперебойности производства и качества выпускаемой продукции

С удовольствием будем прорабатывать для Вас поставки всех необходимых компонентов по текущим запросам для скорейшего выявления групп элементов, по которым сотрудничество именно с нашей компанией будет для Вас максимально выгодным!

С уважением,

Менеджер отдела продаж ООО

«Трейд Электроникс»

Шишлаков Евгений

8 (495)668-30-28 доб 169

manager28@tradeelectronics.ru

http://www.tradeelectronics.ru/