GENERAL SPECIFICATIONS

Electrical Capacity

Resistive Load: HS13: 6A @ 125V AC, 3A @ 250V AC, or 5A @ 30V DC
HS16: 12A @ 125V AC or 6A @ 250V AC
TS: 6A @ 125/250V AC
PS: 30A @ 125/250V AC

Other Ratings

Contact Resistance: 10 milliohms maximum
Insulation Resistance: 200 megohms minimum @ 500V DC
Dielectric Strength: 1,500V AC minimum for 1 minute minimum
Mechanical Life: HS: 15,000 operations minimum
TS: 30,000 operations minimum
PS: 10,000 operations minimum
Electrical Life: HS: 7,500 operations minimum
TS: 10,000 operations minimum
PS: 5,000 operations minimum
Indexing: 30° for HS16, TS & PS; 45° for HS13
Contact Timing: Nonshorting HS13; Shorting & Nonshorting HS16; Nonshorting TS; Nonshorting PS
Range of Operating Torque: HS16: 0.54 ~ 0.64Nm for first pole & 0.05Nm for each additional pole
HS13: 0.15 ~ 0.24Nm
TS: 0.09Nm for first pole & (0.07Nm x total number of poles) + 0.13Nm for additional poles
PS: 0.14Nm for each pole

Materials & Finishes

Knob: Phenolic resin
Shaft: HS13: brass; HS16, TS, & PS: brass with nickel plating
Bushing: HS13: brass; HS16, TS, & PS: brass with nickel plating
Case: Phenolic resin
Movable Contacts: HS13, HS16, & TS phosphor bronze; PS silver alloy
Stationary Contacts: HS13, HS16, & PS: brass with silver plating; TS: phosphor bronze
Terminals: HS: phosphor bronze; TS & PS: copper with silver plating

Environmental Data

Operating Temp Range: –10°C through +70°C (+14°F through +158°F)
Humidity: 90 ~ 98% humidity for 96 hours @ 40°C (104°F)
Vibration: 10 ~ 55 Hz with peak-to-peak amplitude of 1.5mm traversing the frequency range & returning in 1 minute; 3 right angled directions for 2 hours
Shock: 50G (490m/s^2) acceleration (tested in 3 right angled directions, with 3 shocks in each direction)

Installation

Mounting Torque: 2.94Nm (26 lb•in)
Maximum Panel Thickness: Shown with panel cutouts in following drawings
Soldering Time & Temperature: Manual Soldering (HS series only): See Profile A in Supplement section.

Standards & Certifications

UL: **File No. E44145 - Recognized only when ordered with marking on switch.**
Add "/U" or "/CUL" to end of part number to order UL recognized switch.
HS16 models 1– through 6–pole are recognized at 12A @ 125V AC & 6A @ 250V AC
See Supplement section to find UL or cULus rating details.

6 AMP SINGLE POLE/NONSHORTING/45° INDEXING

Round Shaft	D-flat Shaft	Number of Positions	Stopper Settings	Number of Terminals *	Load Terminals
HS13X	HS13X-D	2	Fixed	1 COM, 2 LOAD	1 & 2
HS13Y	HS13Y-D	3	Fixed	1 COM, 3 LOAD	1, 2, & 3
HS13Z	HS13Z-D	4	Fixed	1 COM, 4 LOAD	1, 2, 3, & 4

Schematics

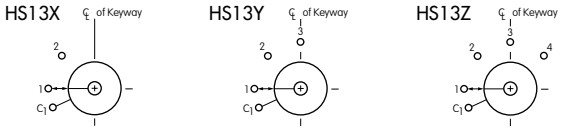

Switch is viewed from shaft end and shown in position 1. Terminal numbers are not on switch. Standard Hardware shown on last page of this section.
* Wire harness & cable assemblies offered only in Americas.

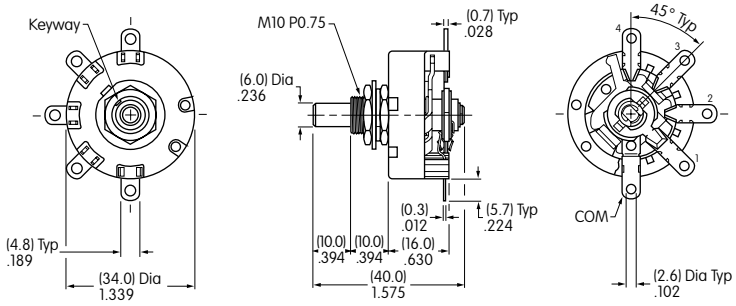

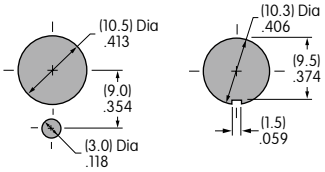

Maximum Effective Panel Thickness
With Locking Ring
.150" (3.8mm)
Without Locking Ring
.189" (4.8mm)

HS13X

12 AMP/SHORTING & NONSHORTING/30° INDEXING

Knurled Shaft		D-flat Shaft						
Nonshorting	Shorting	Nonshorting	Shorting	Pole	Number of Positions	Stopper Settings	Number of Terminals *	Schematic
HS16-1	HS16-1S	HS16-1N	HS16-1SN	1P	2-11	2, 3, 4 . . . 11	1 COM, 11 LOAD	
HS16-2	HS16-2S	HS16-2N	HS16-2SN	2P	2-11	2, 3, 4 . . . 11	2 COM, 22 LOAD	
HS16-3	HS16-3S	HS16-3N	HS16-3SN	3P	2-11	2, 3, 4 . . . 11	3 COM, 33 LOAD	
HS16-4	HS16-4S	HS16-4N	HS16-4SN	4P	2-11	2, 3, 4 . . . 11	4 COM, 44 LOAD	
HS16-5	HS16-5S	HS16-5N	HS16-5SN	5P	2-11	2, 3, 4 . . . 11	5 COM, 55 LOAD	
HS16-6	HS16-6S	HS16-6N	HS16-6SN	6P	2-11	2, 3, 4 . . . 11	6 COM, 66 LOAD	

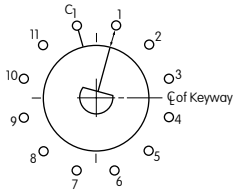

Switch is viewed from shaft end and shown in position 1. Terminal numbers are not on switch. Standard Hardware shown on last page of this section.
* Wire harness & cable assemblies offered only in Americas.

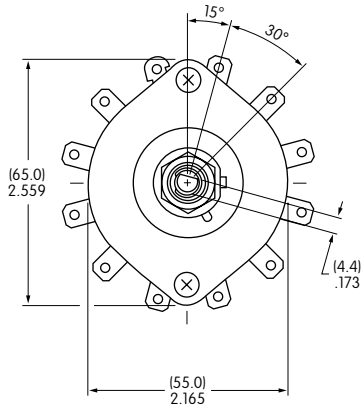

Maximum Effective Panel Thickness
With Locking Ring
.189" (4.8mm)
Without Locking Ring
.228" (5.8mm)

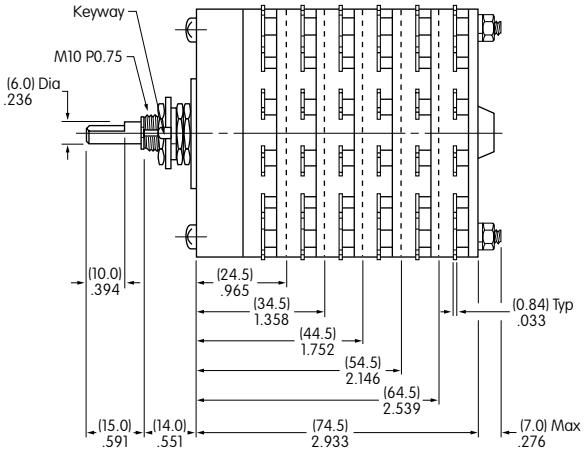

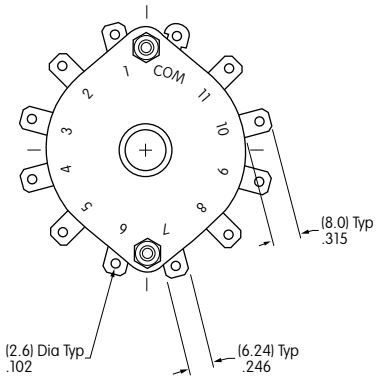

- On each deck of multipole devices common and load terminals are in the same positions as shown in the schematic above.
- Switch is viewed from the shaft end and shown in position 1.
- Terminal numbers are on the switch bottom. Stopper positions are molded on the top of the switch.
- Standard Hardware shown on last page of this section.

HS16-2N

6 AMP/NONSHORTING/ADJUSTABLE STOP/30° INDEXING

Model	Pole	Number of Positions	Stopper Settings	Number of Terminals	Shaft Type	Schematic
TS1N	1P	2-11	2, 3, 4 . . . 11	1 COM, 11 LOAD	D Flat	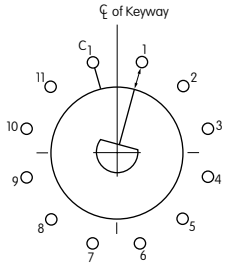 On each deck of multipole devices common & load terminals are in the same positions as shown in this schematic. Switch is viewed from the shaft end and shown in position 1. Terminal numbers are on the switch bottom. Stopper positions are molded on the top of the switch.
TS2N	2P	2-11	2, 3, 4 . . . 11	2 COM, 22 LOAD	D Flat	
TS3N	3P	2-11	2, 3, 4 . . . 11	3 COM, 33 LOAD	D Flat	
TS4N	4P	2-11	2, 3, 4 . . . 11	4 COM, 44 LOAD	D Flat	
TS5N	5P	2-11	2, 3, 4 . . . 11	5 COM, 55 LOAD	D Flat	

- Standard Hardware shown on last page of this section.

Panel Cutouts

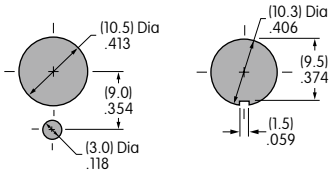

Maximum Effective Panel Thickness
With Locking Ring
.189" (4.8mm)
Without Locking Ring
.228" (5.8mm)

Top

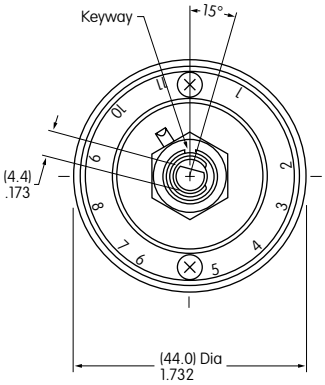

Bottom

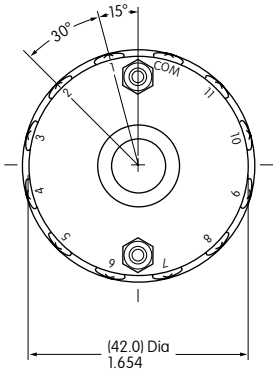

TS5N

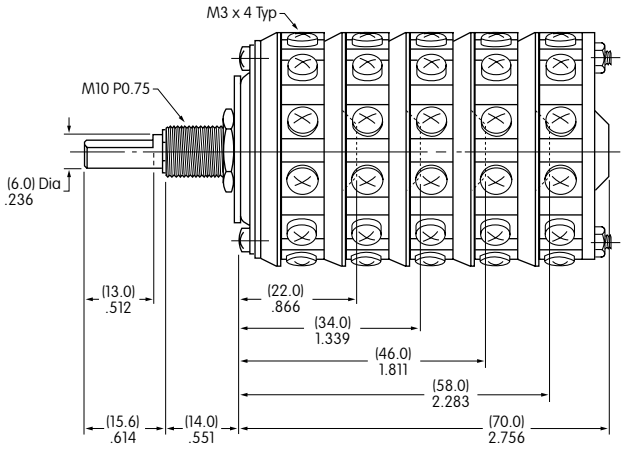

30 AMP/NONSHORTING/ADJUSTABLE STOP/30° INDEXING

Knurled Shaft	D Flat Shaft	Pole	Number of Positions	Stopper Settings	Number of Terminals	Schematic
PS1	**PS1N**	1P	2-11	2, 3, 4 . . . 11	1 COM, 11 LOAD	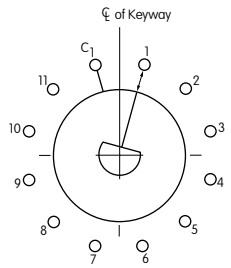
PS2	**PS2N**	2P	2-11	2, 3, 4 . . . 11	2 COM, 22 LOAD	
PS3	**PS3N**	3P	2-11	2, 3, 4 . . . 11	3 COM, 33 LOAD	
PS4	**PS4N**	4P	2-11	2, 3, 4 . . . 11	4 COM, 44 LOAD	
PS5	**PS5N**	5P	2-11	2, 3, 4 . . . 11	5 COM, 55 LOAD	

On each deck of multipole devices common & load terminals are in the same positions as shown in this schematic. Switch is viewed from the shaft end and shown in position 1. Terminal numbers are on switch bottom. Stopper positions are molded on the top of the switch.

- Standard Hardware shown on last page of this section.

Panel Cutout

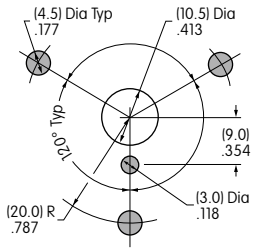

Maximum Effective Panel Thickness
Without Locking Ring
.189" (4.8mm)

Top

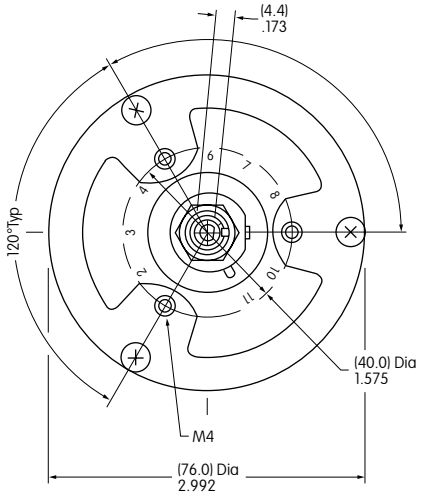

Bottom

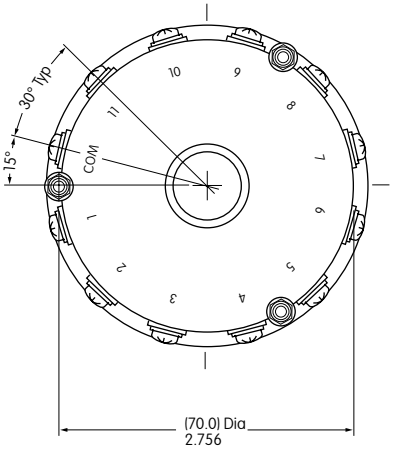

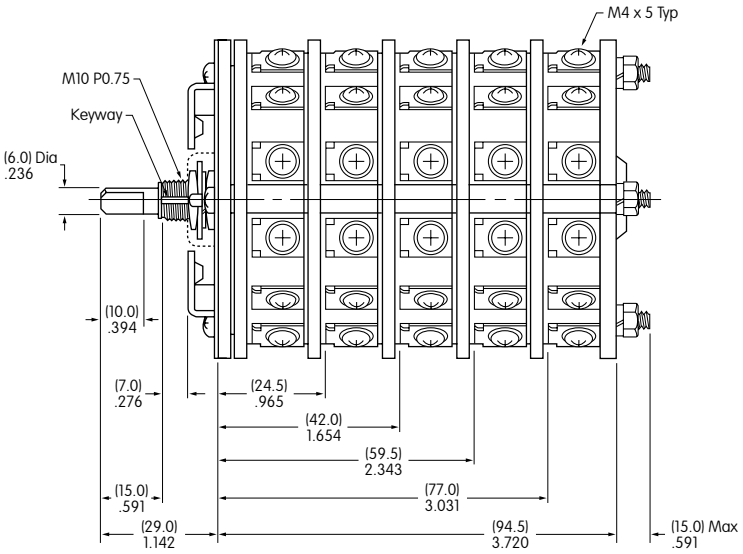

PS4N

SHAFT TYPES

D Flat Shaft

For use with
AT431 and AT432

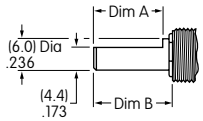

Dimension A		Dimension B	
For TS	(13.0) .512	For TS	(15.6) .614
For HS or PS	(10.0) .394	For HS or PS	(15.0) .591

Knurled Shaft

Not for use with
AT431 or AT432

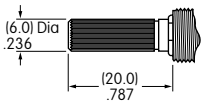

OPTIONAL KNOBS FOR D FLAT SHAFTS

AT431
Large Knob

Phenolic Resin

Black only with white indicator line

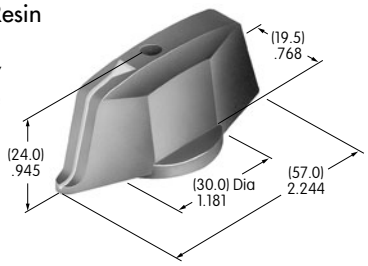

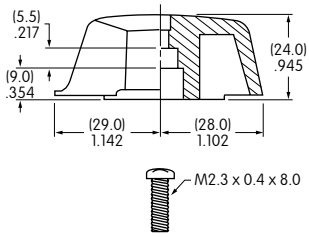

AT432
Small Knob

Phenolic Resin

Black only with white indicator line

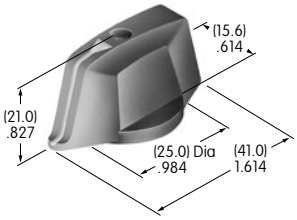

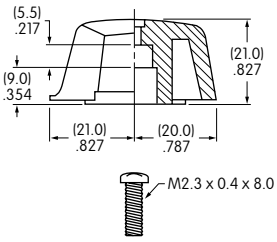

Knob Orientation

The rotary knobs used on the D-flat shafts can be oriented on the switch to suit the customer's particular front panel needs simply by sliding the knob over the square adaptor at the preferred orientation.

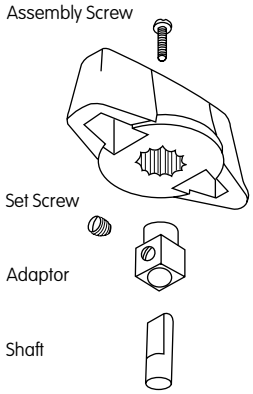

STOPPER SETTING

For HS16, TS, & PS Models

The HS16, TS, and PS switches are supplied with the stopper plate set for the maximum number of positions allowed for that model. Prior to installation, the desired stopper setting should be made:

1. Be sure the shaft is turned counterclockwise to the extreme left. If the shaft is not turned counterclockwise to the extreme left, proper setting cannot be achieved.
2. Loosen the nut far enough to allow raising the stopper plate for resetting.
3. Insert the stopper in the numbered hole for the desired stopper setting. Satisfactory switch functioning cannot be assured if the stopper plate is not properly positioned.
4. Tighten the nut firmly against the stopped plate.

Standard Hardware Supplied with HS, TS, and PS:

AT526 Hex Mounting Nut (quantity 3)
AT518 Locking Ring (quantity 1)
AT520 Split Lockwasher (quantity 1)
Use of mounting supports on PS is optional; screws are not provided.

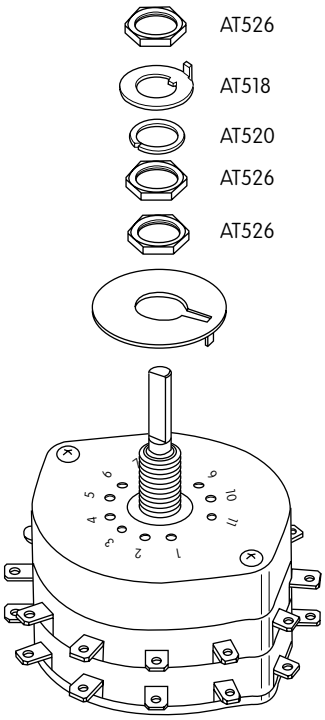

Mouser Electronics

Authorized Distributor

Click to View Pricing, Inventory, Delivery & Lifecycle Information:

NKK Switches:

HS16-5N HS13X AT432 AT431 HS16-3N-RO HS13Y-RO HS16-2N-RO TS3N-RO PS1N-RO HS13-Y-RO PS2N-RO HS16-1N-AT432 HS16-1-RO HS16-1S-RO HS16-3N-AT432 HS16-5S-RO HS16-6N-AT432 PS1N-AT432 PS3N-AT432 PS5N-AT432 TS1N-AT432 TS3N-AT432 TS5N-AT432 TS2N-RO TS4N-RO TS1N-RO HS16-1N-RO HS16-6N-RO HS16-2-RO HS16-3-RO HS16-4N-RO HS13X-RO HS16-5N-RO HS16-6SN-RO HS16-2SN-RO HS16-3SN-RO TS5N-RO PS4N-RO PS3N-RO HS16-4 HS16-4SN HS13X-D-RO HS13Y-D-RO HS13Z-D-RO HS13Z-RO HS16-1SN-RO HS16-5SN-RO PS1 PS2 PS3 PS5N PS5 PS4 HS16-6-RO PS3-RO PS5N-RO

О компании

ООО "ТрейдЭлектроникс" - это оперативные поставки широкого спектра электронных компонентов отечественного и импортного производства напрямую от производителей и с крупнейших мировых складов. Реализуемая нашей компанией продукция насчитывает более полумиллиона наименований.

Благодаря этому наша компания предлагает к поставке практически не ограниченный ассортимент компонентов как оптовыми, мелкооптовыми партиями, так и в розницу.

Наличие собственной эффективной системы логистики обеспечивает надежную поставку продукции по конкурентным ценам в точно указанные сроки.

Срок поставки со стоков в **Европе и Америке – от 3 до 14 дней.**

Срок поставки из **Азии – от 10 дней.**

Благодаря развитой сети поставщиков, помогаем в поиске и приобретении экзотичных или снятых с производства компонентов.

Предоставляем спец цены на элементы для создания инженерных сэмплов.

Упорный труд, качественный результат дают нам право быть уверенными в себе и надежными для наших клиентов.

Наша компания это:

- Гарантия качества поставляемой продукции
- Широкий ассортимент
- Минимальные сроки поставок
- Техническая поддержка
- Подбор комплектации
- Индивидуальный подход
- Гибкое ценообразование

Наша организация особенно сильна в поставках модулей, микросхем, пассивных компонентов, ксайленсах (XC), EPF, EPM и силовой электроники.

Большой выбор предлагаемой продукции, различные виды оплаты и доставки, позволят Вам сэкономить время и получить максимум выгоды от сотрудничества с нами!

Trade Electronics.ru

гарантия бесперебойности производства и качества выпускаемой продукции

Перечень производителей, продукцию которых мы поставляем на российский рынок

AMD
ANALOG DEVICES
BOURNS
Coilcraft
élantec Semiconductor, Inc.
HARRIS
Infineon
JRC
MICREL
MOTOROLA
nichicon
PHILIPS
ROHM
SGS-THOMSON
Sipex
TAIYO YUDEN
TOKO
ZILOG
Winbond
Allegro
ATMEL
BURR - BROWN
EXAR
HITACHI
intel
Lattice
muRata
OKI
QUALCOMM
SAMSUNG
SHARP
SONY
TDK
TOSHIBA
KYOCERA
ALTERA
AVX
CITILYST
CYPRESS
FAIRCHILD SEMICONDUCTOR
HOLTEK
International IOR Rectifier
LINEAR TECHNOLOGY
MITSUBISHI
National Semiconductor
ON Semiconductor
REALTEK
SANYO
SHINDENGEN
SGS
TECCOR
TUNDRA
XILINX
Amphenol
Bay Linear
CIRRUS LOGIC
DALLAS
FUJITSU
IDT
intersil
MAXIM
molex
NEC
Panasonic
RENESAS
SII
SIEMENS
ST
Texas Instruments
VISHAY
ZETEX SEMICONDUCTORS

Trade Electronics.ru

гарантия бесперебойности производства и качества выпускаемой продукции

С удовольствием будем прорабатывать для Вас поставки всех необходимых компонентов по текущим запросам для скорейшего выявления групп элементов, по которым сотрудничество именно с нашей компанией будет для Вас максимально выгодным!

С уважением,

Менеджер отдела продаж ООО

«Трейд Электроникс»

Шишлаков Евгений

8 (495)668-30-28 доб 169

manager28@tradeelectronics.ru

http://www.tradeelectronics.ru/