FAIRCHILD SEMICONDUCTOR®

AUTOMOTIVE SOLUTIONS

Power Semiconductors Maximize Efficiency and Reliability

Smart Power

Gate Drivers

Rectifiers

Ignition IGBTs

IGBTs

MOSFETs

INTRODUCTION

Automotive Electronic Designers need suppliers who understand their business. With a comprehensive approach to quality, safety and reliability, Fairchild distinguishes itself by providing AEC qualified solutions that solve complex challenges in the automotive market.

Product Design

Fairchild has a legacy of more than 50 years as a worldwide automotive semiconductor supplier. Our portfolio of products covers the full spectrum of the automotive power space. Fairchild's Smart Power products combine power discrete and control IC technologies with innovative packaging to create modular-level solutions for DC and AC motor drive, load control, solenoid operation, lighting, power distribution, injection and ignition. Our leading-edge IGBTs, MOSFETs, injector drivers, gate drivers and modules are used in production power train, engine management, electric power-assist steering (EPAS), motor drives, power inverters and other systems that require high quality components. We partner with automotive customers to optimize performance, reduce component count, improve time-to-market, and enhance the overall value proposition. From concept through production, Fairchild partners with you to develop solutions that meet the needs of advanced vehicles, with modeling and simulation for both thermal and electrical performance.

BUILT-IN QUALITY AT EVERY STEP

Fairchild also offers a variety of automotive products in un-sawn wafer, sawn wafer and KGD (Known Good Die). Fairchild's Known Good Die program supports maximum yield in the application, using SPC to assure tight parameter distribution. After singulation, all die are 100% electrically tested to the datasheet. Tests include high current testing.

Quality

Our best-in-class products are complemented by a focused Automotive Product Line, with dedicated resources, including global power labs and regional applications support. Our automotive product development and manufacturing sites are QS-9000 and TS-16939 certified. Automotive products are manufactured and assembled in-house in Fairchild operated facilities.

KEY APPLICATIONS 4-6

ELECTRICAL CENTER/LOAD CONTROL 4

POWER INVERTER 4

DC MOTOR CONTROL/BRUSHLESS MOTOR DRIVE 5

AUTOMOTIVE IGNITION 6

AUTOMOTIVE INJECTION 6

POWER PRODUCTS 7-14

MOSFETs 7

N-CHANNEL 7-9

INJECTOR/SOLENOID DRIVER 9

P-CHANNEL 9-10

COMPLEMENTARY PAIRS 10

IGBTs 10

IGBTs 10

IGNITION IGBTs 11

RECTIFIERS 12

ULTRAFAST RECTIFIERS 12

HYPERFAST RECTIFIERS 12

STEALTH™ ULTRASOFT RECOVERY RECTIFIERS 12

GATE DRIVERS 12

HIGH-VOLTAGE (HVIC) GATE DRIVERS 12

HIGH-SPEED, LOW-SIDE GATE DRIVERS 13

SMART POWER 14

SMART HIGH-SIDE SWITCHES 14

HIGH CURRENT BRIDGES 14

AUTOMOTIVE POWER MODULES 15

Power Distribution Center

The primary function of smart switches is to replace automotive relays and fuses, to protect vehicle wiring and to improve diagnostics of electrical loads. With smart switches, it is possible to combine switching and protection functions in a single device. Fairchild has several offerings for load control and power distribution, covering current ranges for exterior and interior lighting, powered actuators, motors and auxiliary power.

Power distribution systems are often located in multiple places within a vehicle, both interior and under the hood. The temperature ranges of Fairchild's products are compatible with under the hood environments, load dump and other electrical transients. They are fully qualified to AEC standards.

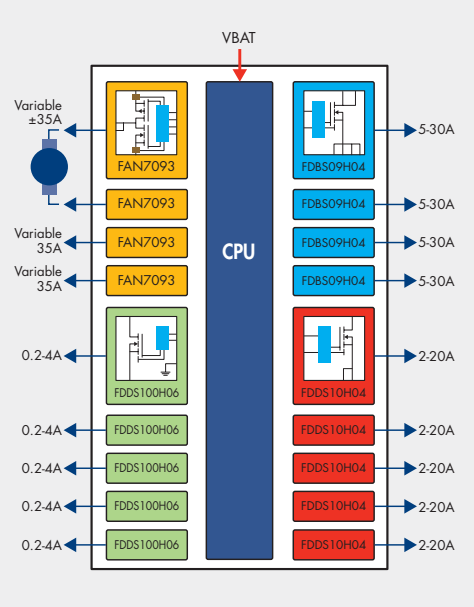

Design Advantages Include:

- Analog current monitoring of loads
- PWM capability for lighting
- Fault isolation and reporting

Power Inverter

Fairchild provides solutions for DC-DC conversion for all power ranges. From low power AC accessory inverters to multi-kilowatt HV/EV down converters for $12V_{DC}$ power.

Design Advantages Include:

- Low propagation delay of gate drivers efficient switching
- Planar technology high voltage MOSFET for output robustness
- Half-bridge gate drivers in output stage can provide high noise immunity and dead time control
- MillerDrive™ low-side gate drivers provide high peak current and low voltage drop

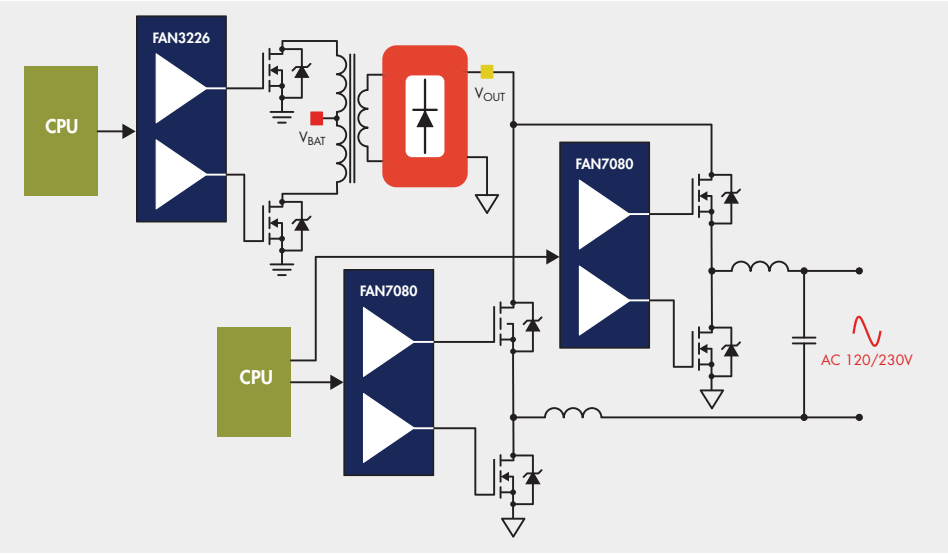

DC MOTOR CONTROL/BRUSHLESS MOTOR DRIVE

Fairchild products provide solutions for driving DC motors efficiently over a wide range load in full- and half-bridge configurations. For higher currents, half-bridge gate drivers like the FAN7080 and FAN7190 can be used with discrete MOSFETs and IGBTs to control motors operating from 12V to 600V_{DC}. For 12V_{DC} motors, operating in the ~30A range, the FAN7093 provides full- and half-bridge control, with current sensing and diagnostic feedback common in load sensing applications such as seat tracks, window lift, powered lift gate, cooling fan and reversing wipers.

Design Advantages Include:

- High efficiency over wide PWM range
- Solutions for all load ranges in ICE, HV and EV vehicle applications
- Up to 50kHz operation typically capable

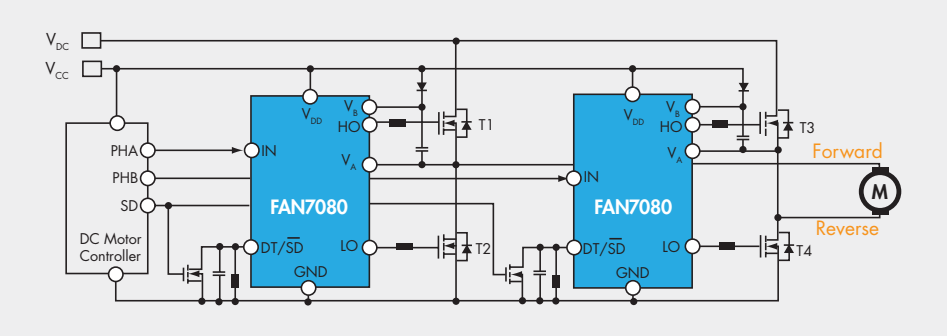

Discrete HVIC Based Full-Bridge

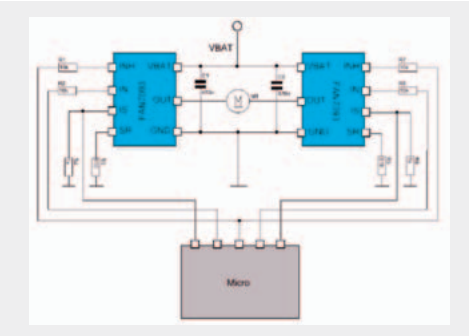

Smart Power P/N Based Full-Bridge

Brushless Motor Drive

Three-phase motor control, both from low voltage and HV supply are used for driving variable speed powered systems.

Design Advantages Include:

- HVIC gate drivers combine to drive each half-bridge providing bootstrap gate drive
- Planar MOSFETs available for HV application robustness

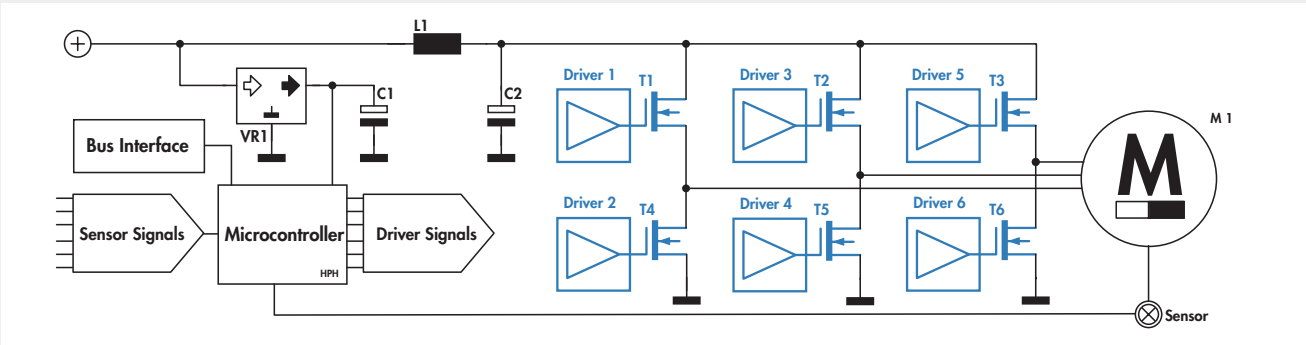

Three-Phase Motor Control

EcoSPARK® I and EcoSPARK® 2 igniters provide 200 to 500mJ SCIS energy ratings. Standard product ranges from 300 to 500V clamp.

Customer specific devices, including Smart IGBT products with a co-packaged control IC can provide maximum dwell, current limit and other features.

Automotive Ignition

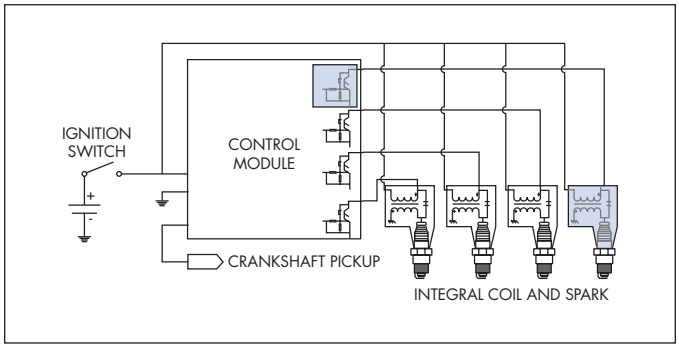

Coil-on-Plug (COP) System Architecture

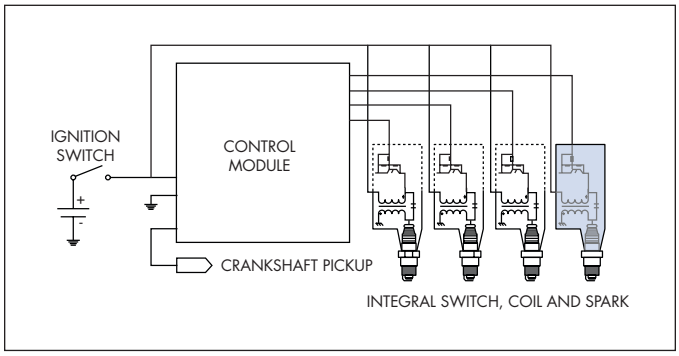

Switch-on-Coil System Architecture

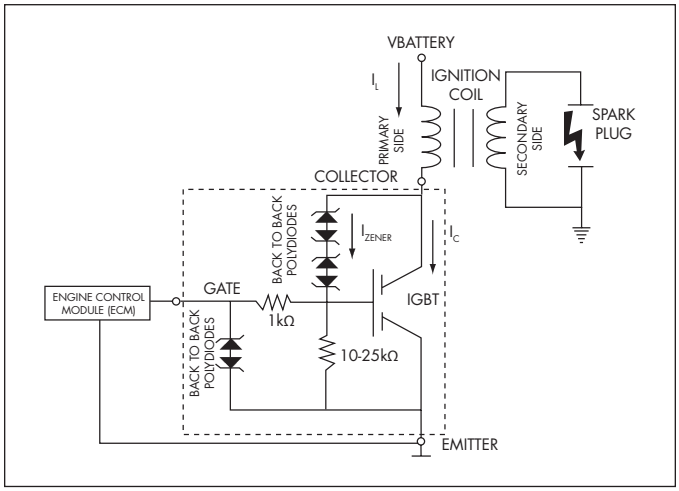

Typical IGBT Igniter Circuit

Automotive Injection

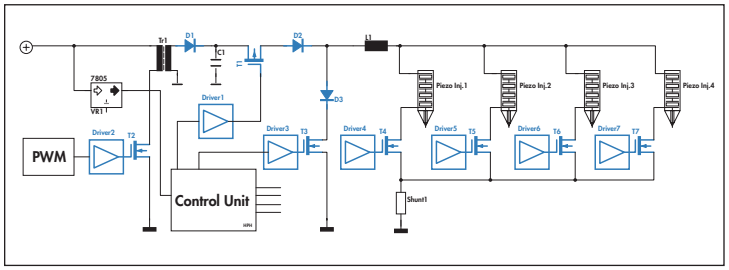

Piezo Activated Semi-Resonant Direct Injection

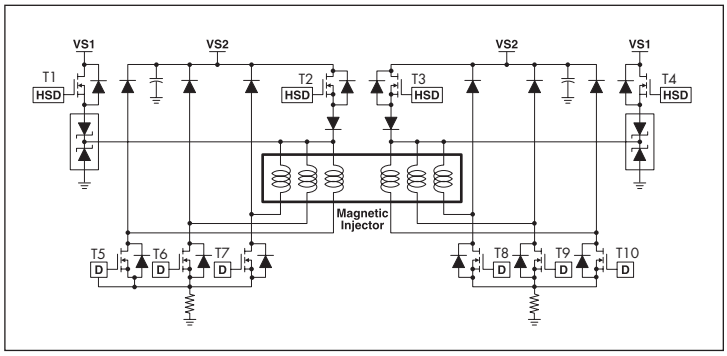

Common Rail Solenoid Direct Injection (CR-SDI)

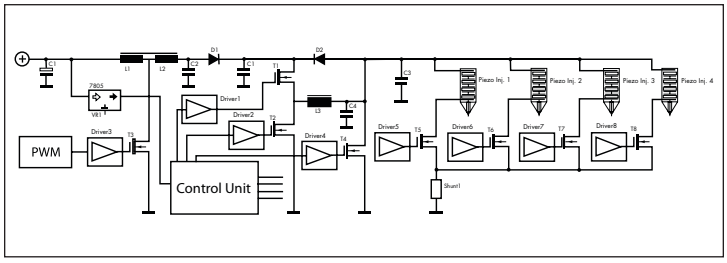

Common Rail Piezo Direct Injection (CR-PDI)

N-CHANNEL MOSFETs

N-Channel MOSFETs (Trench)

Product Number *(20V to 25V Low Logic Level)*	Polarity	BV_{DSS} Min. (V)	Configuration	$R_{DS(ON)}$ Max. (Ω) @ V_{GS} = 4.5V	$R_{DS(ON)}$ Max. (Ω) @ V_{GS} = 2.7V	Qg Typ. (nC) @ V_{GS} = 4.5V	I_D (A)	P_D (W)	$R_{\Theta JC}$ (°C/W)	Package
FDS6898AZ_F085[1]	N	20	Dual	0.014	0.018	16	9.4	2	40	SO-8
FDG6301N_F085	N	25	Dual	4	5	0.29	0.22	0.3	415	SC70

Product Number *(30V Logic Level)*	Polarity	BV_{DSS} Min. (V)	Configuration	$R_{DS(ON)}$ Max. (Ω) @ V_{GS} = 10V	$R_{DS(ON)}$ Max. (Ω) @ V_{GS} = 4.5V	Qg Typ. (nC) @ V_{GS} = 5V	I_D (A)	P_D (W)	$R_{\Theta JC}$ (°C/W)	Package
FDB8832_F085	N	30	Single	0.0019	0.0022	100	80	300	0.5	TO-263 (D2PAK)
FDB8860_F085	N	30	Single	0.0023	0.0027	89	80	254	0.59	TO-263 (D2PAK)
FDD8870_F085	N	30	Single	0.0039	0.0044	48	160	160	0.94	TO-252 (DPAK)
FDB8870_F085	N	30	Single	0.0039	0.0044	56	160	160	0.94	TO-263 (D2PAK)
FDP8870_F085	N	30	Single	0.0041	0.0046	56	156	160	0.94	TO220 3-LEAD
FDD8896_F085	N	30	Single	0.0057	0.0068	24	94	80	1.88	TO-252 (DPAK)
FDB8896_F085	N	30	Single	0.0057	0.0068	25	93	80	0.53	TO-263 (D2PAK)
FDP8896_F085	N	30	Single	0.0057	0.0068	25	92	80	0.53	TO-263 (D2PAK)
FDS8984_F085	N	30	Dual	0.023	0.03	5	7	2	40	SO-8

Product Number *(30V Standard Gate)*	Polarity	BV_{DSS} Min. (V)	Configuration	$R_{DS(ON)}$ Max. (Ω) @ V_{GS} = 10V	$R_{DS(ON)}$ Max. (Ω) @ V_{GS} = 4.5V	Qg Typ. (nC) @ V_{GS} = 10V	I_D (A)	P_D (W)	$R_{\Theta JC}$ (°C/W)	Package
FDB8132_F085	N	30	Single	0.0016	-	209	80	341	0.44	TO-263 (D2PAK)
FDB8160_F085	N	50	Single	0.0018	-	187	80	254	0.59	TO-263 (D2PAK)

Product Number *(40V Logic Level)*	Polarity	BV_{DSS} Min. (V)	Configuration	$R_{DS(ON)}$ Max. (Ω) @ V_{GS} = 10V	$R_{DS(ON)}$ Max. (Ω) @ V_{GS} = 4.5V	Qg Typ. (nC) @V_{GS} = 5V	I_D (A)	P_D (W)	$R_{\Theta JC}$ (°C/W)	Package
FDD8444L_F085	N	40	Single	0.0052	0.006	46	50	153	0.98	TO-252 (DPAK)
FDD8447L_F085	N	40	Single	0.0085	0.011	37	50	65	2.3	TO-252 (DPAK)
FDD8453LZ_F085[1]	N	40	Single	0.0065	0.0078	32	50	118	1.27	TO-252 (DPAK)
FDS8449_F085	N	40	Single	0.029	0.036	7.7	7.6	2.5	25	SO-8
FDS8949_F085	N	40	Dual	0.029	0.036	7.7	6	2.5	40	SO-8

Product Number *(40V Standard Gate)*	Polarity	BV_{DSS} Min. (V)	Configuration	$R_{DS(ON)}$ Max. (Ω) @ V_{GS} = 10V	$R_{DS(ON)}$ Max. (Ω) @ V_{GS} = 4.5V	Qg Typ. (nC) @ V_{GS} = 10V	I_D (A)	P_D (W)	$R_{\Theta JC}$ (°C/W)	Package
FDB9403_F085*	N	40	Single	0.0014	-	110	120	300	0.5	TO-263(D2PAK)
FDD9407_F085*	N	40	Single	0.00187	-	87	100	180	0.95	TO-252 (DPAK)
FDB9406_F085*	N	40	Single	0.0016	-	92	120	250	0.63	TO-263 (D2PAK)
FDI9406_F085*	N	40	Single	0.0018	-	92	115	200	0.72	TO-262 (I2PAK)
FDB8441_F085	N	40	Single	0.0025	-	280	80	300	0.5	TO-263 (D2PAK)
FDI8441_F085	N	40	Single	0.0027	-	280	80	300	0.5	TO-262 (I2PAK)
FDP8441_F085	N	40	Single	0.0027	-	215	80	300	0.5	TO220 3-LEAD
FDD9409_F085*	N	40	Single	0.00285	-	70	80	150	1.02	TO-252 (DPAK)
FDB8442_F085	N	40	Single	0.0029	-	181	80	254	0.59	TO-263 (D2PAK)
FDB8443_F085	N	40	Single	0.003	-	142	80	254	0.8	TO-263 (D2PAK)
FDP8443_F085	N	40	Single	0.0035	-	142	80	254	0.8	TO-220 3-LEAD
FDB8444_F085	N	40	Single	0.0055	-	91	70	167	0.9	TO-263 (D2PAK)
FDD8444_F085	N	40	Single	0.0052	-	89	50	153	0.98	TO-252 (DPAK)
FDB8445_F085	N	40	Single	0.009	-	44	70	92	1.63	TO-263 (D2PAK)
FDD8445_F085	N	40	Single	0.0087	-	45	50	79	1.9	TO-252 (DPAK)

[1] With ESD Gate Protection Zeners
** In development*

N-Channel MOSFETs (Trench)

Product Number (60V Logic Level)	Polarity	BV_{DSS} Min. (V)	Configuration	$R_{DS(ON)}$ Max. (Ω) @ V_{GS} =		Qg Typ. (nC) @ V_{GS} = 4.5V	I_D (A)	P_D (W)	$R_{\Theta JC}$ (°C/W)	Package
				10V	4.5V					
FDB14AN06LA0_F085	N	60	Single	0.0116	0.0146	24	67	125	1.2	TO-263 (D2PAK)
FDD14AN06LA0_F085	N	60	Single	0.0116	0.0146	25	50	125	1.2	TO-252 (DPAK)
FDD24AN06LA0_F085	N	60	Single	0.019	0.024	16	40	75	2	TO-252 (DPAK)
FDD5810_F085	N	60	Single	0.022	0.027	13	37	72	2.1	TO-252 (DPAK)
FDC5661N_F085	N	60	Single	0.047	0.06	14.5 @ 10V	4.3	1.6	30	SSOT-6

Product Number (60V Standard Gate)	Polarity	BV_{DSS} Min. (V)	Configuration	$R_{DS(ON)}$ Max. (Ω) @ V_{GS} =		Qg Typ. (nC) @ V_{GS} = 10V	I_D (A)	P_D (W)	$R_{\Theta JC}$ (°C/W)	Package
				10V	6V					
FDB035AN06A0_F085	N	60	Single	0.0035	0.0066	95	80	310	0.48	TO-263 (D2PAK)
FDP035AN06A0_F085	N	60	Single	0.0035	0.0066	95	80	310	0.48	TO-220
FDB070AN06A0_F085	N	60	Single	0.007	-	51	80	175	0.86	TO-263 (D2PAK)
FDD10AN06A0_F085	N	60	Single	0.0105	0.027	28	50	135	1.11	TO-252 (DPAK)
FDD13AN06A0_F085	N	60	Single	0.0135	0.034	22	50	115	1.3	TO-252 (DPAK)
FDD20AN06A0_F085	N	60	Single	0.02	-	15	45	90	1.67	TO-252 (DPAK)
FDD26AN06A0_F085	N	60	Single	0.026	-	17	36	75	2	TO-252 (DPAK)

Product Number (75V to 100V)	Polarity	BV_{DSS} Min. (V)	Configuration	$R_{DS(ON)}$ Max. (Ω) @ V_{GS} =		Qg Typ. (nC) @ V_{GS} = 10V	I_D (A)	P_D (W)	$R_{\Theta JC}$ (°C/W)	Package
				10V	6V					
FDB045AN08A0_F085	N	75	Single	0.0045	0.0084 @ 4.5V	92	90	310	0.48	TO-263 (D2PAK)
FDD16AN08A0_F085	N	75	Single	0.016	0.029	31	50	135	1.11	TO-252 (DPAK)
FDB3652_F085	N	100	Single	0.016	0.026	41	61	150	1	TO-263 (D2PAK)
FDB3672_F085	N	100	Single	0.028	0.047	31	44	120	1.25	TO-263 (D2PAK)
FDD3672_F085	N	100	Single	0.028	0.047	24	44	144	1.04	TO-252 (DPAK)
FDD3682_F085	N	100	Single	0.036	0.06	18.5	32	95	1.58	TO-252 (DPAK)

Product Number (150V to 250V)	Polarity	BV_{DSS} Min. (V)	Configuration	$R_{DS(ON)}$ Max. (Ω) @ V_{GS} =		Qg Typ. (nC) @ V_{GS} = 10V	I_D (A)	P_D (W)	$R_{\Theta JC}$ (°C/W)	Package
				10V	6V					
FDB2532_F085	N	150	Single	0.016	0.024	82	79	310	0.48	TO-263 (D2PAK)
FDP42AN15A0_F085	N	150	Single	0.042	0.06	30	35	150	1	TO-220 3-LEAD
FDD2572_F085	N	150	Single	0.054	0.075	26	29	135	1.11	TO-252 (DPAK)
FDD120AN15A0_F085	N	150	Single	0.12	0.17	11.2	14	65	2.31	TO-252 (DPAK)
FDS2672_F085	N	200	Single	0.07	0.08	33	3.9	2.5	25	SO-8
FDP2710_F085	N	250	Single	0.047	-	78	50	403	0.31	TO-220 3-LEAD

N-Channel MOSFETs (Planar)

Product Number	Polarity	BV_{DSS} Min. (V)	Configuration	$R_{DS(ON)}$ Max. (Ω) @ V_{GS} =		Qg Typ. (nC) @ V_{GS} = 10V	I_D (A)	P_D (W)	$R_{\Theta JC}$ (°C/W)	Package
				10V	4.5V					
55V Standard Gate										
FDP5500_F085	N	55	Single	0.007	-	114	80	375	0.4	TO-220 3-LEAD
FDH5500_F085	N	55	Single	0.007	-	118	75	375	0.4	TO-247 3-LEAD
HUFA75344S3_F085	N	55	Single	0.008	-	90	75	285	0.52	TO-262 (I2PAK)
HUFA75321D3ST_F085	N	55	Single	0.036	-	21	20	93	1.6	TO-252 (DPAK)
HUFA75307T3ST	N	55	Single	0.09	-	8.3	2.6	1.1	110	SOT-223 4-LEAD
60V Logic Level										
HUFA76429D3ST_F085[1]	N	60	Single	0.023	0.029	46	20	110	1.36	TO-252 (DPAK)
HUFA76419D3ST_F085[1]	N	60	Single	0.037	0.043	23	20	75	2	TO-252 (DPAK)
HUFA76413DK8T_F085[1]	N	60	Dual	0.049	0.056	23	5.1	2.5	50	SO-8
HUFA76409D3ST_F085[1]	N	60	Single	0.063	0.075	15	18	49	3.06	TO-252 (DPAK)
HUFA76407DK8T_F085[1]	N	60	Dual	0.09	0.11	11.2	3.5	2.5	50	SO-8

N-CHANNEL/INJECTOR/SOLENOID DRIVER/P-CHANNEL

N-Channel MOSFETs (Planar)

Product Number (100V)	Polarity	BV_{DSS} Min. (V)	Configuration	$R_{DS(ON)}$ Max. (Ω) @ V_{GS} = 10V	$R_{DS(ON)}$ Max. (Ω) @ V_{GS} = 4.5V	Qg Typ. (nC) @ V_{GS} = 10V	I_D (A)	P_D (W)	$R_{\Theta JC}$ (°C/W)	Package
HUFA76645S3ST_F085[1]	N	100	Single	0.014	0.0155	127	75	310	0.48	TO-263 (D2PAK)
HUFA75639S3ST_F085	N	100	Single	0.025	-	57	56	200	0.74	TO-263 (D2PAK)
Product Number (150V to 250V)	**Polarity**	**BV_{DSS} Min. (V)**	**Configuration**	**$R_{DS(ON)}$ Max. (Ω) @ V_{GS} = 10V**	**$R_{DS(ON)}$ Max. (Ω) @ V_{GS} = 5V**	**Qg Typ. (nC) @ V_{GS} = 10V**	**I_D (A)**	**P_D (W)**	**$R_{\Theta JC}$ (°C/W)**	**Package**
HUFA75852G3_F085	N	150	Single	0.16	-	215	75	500	0.3	TO-247
FQD12N20LTM_F085[1]	N	200	Single	0.28	0.32	16 @ 5V	9	55	2.27	TO-252 (DPAK)
FQD9N25TM_F085	N	250	Single	0.42	-	15.5	7.4	55	2.27	TO-252 (DPAK)
FQI27N25TU_F085	N	250	Single	0.11	-	65	25.5	180	0.7	TO-262 (I2PAK)
FQB27N25TU_F085	N	250	Single	0.11	-	65	25.5	180	0.7	TO-263 (D2PAK)
Product Number (330V to 600V)	**Polarity**	**BV_{DSS} Min. (V)**	**Configuration**	**$R_{DS(ON)}$ Max. (Ω) @ V_{GS} = 10V**	**$R_{DS(ON)}$ Max. (Ω) @ V_{GS} = 5V**	**Qg Typ. (nC) @ V_{GS} = 10V**	**I_D (A)**	**P_D (W)**	**$R_{\Theta JC}$ (°C/W)**	**Package**
FQB25N33TM_F085	N	330	Single	0.23	-	58 @ 15V	25	250	0.5	TO-263 (D2PAK)
FDD6N50TM_F085	N	500	Single	0.9	-	12.8	6	89	1.4	TO-252 (DPAK)
FCB20N60_F085	N	600	Single	0.19	-	75	20	208	0.6	TO-263 (D2PAK)
FCP20N60_F085	N	600	Single	0.19	-	75	20	208	0.6	TO-220 3-LEAD
FCB20N60F_F085[2]	N	600	Single	0.19	-	75	20	208	0.6	TO-263 (D2PAK)
FCP20N60F_F085[2]	N	600	Single	0.19	-	75	20	208	0.6	TO-220 3-LEAD
FCH47N60_F085	N	600	Single	0.07	-	210	47	417	0.3	TO-247
FCH47N60F_F085[2]	N	600	Single	0.073	-	210	47	417	0.3	TO-247

[1] Logic Level

[2] Fast Recovery Type

Injector/Solenoid Driver

Product Number	Polarity	Gate Input	BV_{DSS} Min. (V)	Configuration	$R_{DS(ON)}$ Max. (Ω) @ V_{GS} = 10V	$R_{DS(ON)}$ Max. (Ω) @ V_{GS} = 4.5V	Qg Typ. (nC) @ V_{GS} = 10V	t_r Typ. (µs)	t_f Typ. (µs)	I_D (A)	P_D (W)	Special Features	$R_{\Theta JC}$ (°C/W)	Package
FDSS2407	N	Logic Level	62	Dual	0.11	0.132	4.3	1.2	3.5	3.3	2.27	Gate Disable, V_{DS} Feedback	55	SO-8

Injector Solenoid Driver: FDSS2407

P-Channel MOSFETs (Trench)

Product Number (-20V)	Polarity	BV_{DSS} Min. (V)	Configuration	$R_{DS(ON)}$ Max. (Ω) @ V_{GS} = 10V	$R_{DS(ON)}$ Max. (Ω) @ V_{GS} = 2.7V	Qg Typ. (nC) @ V_{GS} = 4.5V	I_D (A)	P_D (W)	$R_{\Theta JC}$ (°C/W)	Package
FDC642P_F085	P	-20	Single	0.065	0.1	6.9	4	1.6	30	SSOT-6
FDS9431A_F085	P	-20	Single	0.13	0.18	6	3.5	2.5	25	SO-8
FDS4465_F085	P	-20	Single	0.0085	0.0105	86	13.5	2.5	25	SO-8

P-Channel MOSFETs (Trench)

Product Number (-30V to -60V)	Polarity	BV_{DSS} Min. (V)	Configuration	$R_{DS(ON)}$ Max. (Ω) @ V_{GS} = 10V	$R_{DS(ON)}$ Max. (Ω) @ V_{GS} = 4.5V	Qg Typ. (nC) @ V_{GS} = 5V	I_D (A)	P_D (W)	$R_{\Theta JC}$ (°C/W)	Package
FDS6673BZ_F085[1]	P	-30	Single	0.012	0.078	46	14.5		25	SO-8
FDS4435BZ_F085[1]	P	-30	Single	0.02	0.035	16	8.8	2.5	25	SO-8
FDD6637_F085[2]	P	-35	Single	0.0116	0.018	25	55	2.4	2.2	TO-252 (DPAK)
FDD4243_F085	P	-40	Single	0.044	0.064	21[3]	6.7	68	3	TO-252 (DPAK)
FDD4685_F085	P	-40	Single	0.027	0.035	19	32	42	1.8	TO-252 (DPAK)
FDS4675_F085	P	-40	Single	0.013	0.017	40	11	83	25	SO-8
FDD4141_F085	P	-40	Single	0.0123	0.018	19	50	2.4	1.8	TO-252 (DPAK)
FDS4141_F085	P	-40	Single	0.013	0.019	18.6	10.8	69	30	SO-8
FDS9958_F085	P	-60	Dual	0.105	0.135	8	2.9	5	40	SO-8

[1] With Gate Protection Zeners ±25V V_{GS} [2] With ±25V V_{GS} [3] @ V_{GS} = 10V

P-Channel MOSFETs (Planar)

Product Number (–100V to -500V)	Polarity	BV_{DSS} Min. (V)	Configuration	$R_{DS(ON)}$ Max. (Ω) @ V_{GS} = 10V	$R_{DS(ON)}$ Max. (Ω) @ V_{GS} = 4.5V	Qg Typ. (nC) @ V_{GS} = 10V	I_D (A)	P_D (W)	$R_{\Theta JC}$ (°C/W)	Package
FQB34P10TM_F085	P	-100	Single	0.06	-	110	33.5	155	0.97	TO-263 (D2PAK)
FQD12P10TM_F085	P	-100	Single	0.29	-	27	9.4	50	2.5	TO-252 (DPAK)
FQB22P10TM_F085	P	-100	Single	0.125	-	50	22	125	1.2	TO-263 (D2PAK)
FQD8P10TM_F085	P	-100	Single	0.53	-	12	6.6	44	2.84	TO-252 (DPAK)
FQB7P20TM_F085	P	-200	Single	0.69	-	25	19	90	1.39	TO-263 (D2PAK)

N/P-Channel Complementary Pair MOSFETs (Trench)

Product Number (20V to 60V)	Polarity	BV_{DSS} Min. (V)	Configuration	$R_{DS(ON)}$ Max. (Ω) @ V_{GS} = 10V	$R_{DS(ON)}$ Max. (Ω) @ V_{GS} = 4.5V	Qg Typ. (nC) @ V_{GS} =	I_D (A)	P_D (W)	$R_{\Theta JC}$ (°C/W)	Package (Fig.)
FDG6332C_F085	NP	20	Comp	-	0.3/0.42	1.1/1.4 @ V_{GS} = 4.5V	0.7/-0.6	0.3	415	SC70 (1)
FDS8958A_F085	NP	30	Comp	0.028/0.052	0.04/.08	16 @ V_{GS} = 10V	7/-5	2	40	SO-8 (2)
FDD8424H_F085A	NP	40	Comp	0.024/0.054	0.03/0.07	14/17 @ V_{GS} = 10V	26/-20	30/35	4.1/3.5	TO-252 (DPAK-4L) (3)
FDS4559_F085	NP	60	Comp	0.042/0.082	0.055/0.105	12/15 @ V_{GS} = 10V	4.5/-3.5	2	40	SO-8 (2)

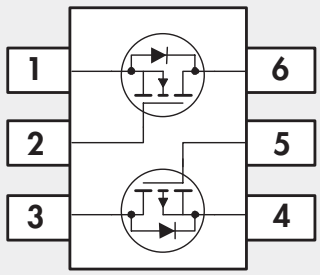

Fig 1. Dual N/P SC70

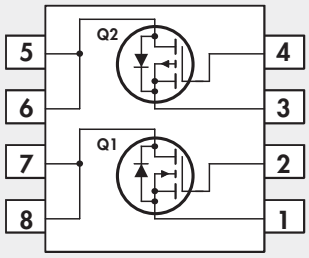

Fig 2. Dual N/P SO8

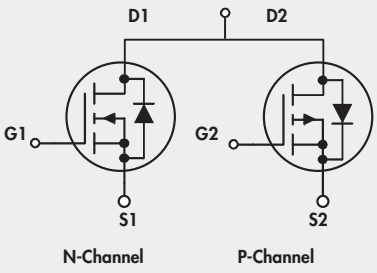

Fig 3. Dual N/P TO 252/4L

IGBTs

Product Number	BV_{DSS} Min. (V)	I_C @ 25°C (A)	$V_{CE(sat)}$ Max. (V) Max. (V)	$V_{CE(sat)}$ Max. (V) Test Condition @ 25°C	t_f @ 25°C Typ. (ns)	Built-in Diode	P_D (W)	$R_{\Theta JC}$ (°C/W)	Package
FGD3N60LSD	600	19	1.5	3A, 10V	800	Yes	40	3.1	TO-252 (DPAK)

IGNITION IGBTs/CURRENT SENSING IGNITION IGBTs

Ignition IGBTs

Product Number	I_C @ 110°C (A)	$V_{CE(sat)}$ Max. (V)		t_f Typ. (ns)	Clamp Voltage		SCIS Energy (Max) (mJ)	Package
		Max. (V)	Test Condition @ 25°C		Typ. (V)	Test Condition @ -40°C to 150°C		
ISL9V2040D3S	10	1.45	6A, 4.5V	2360	400	I_C = 2mA, R = 1k, $V_{GE = 0V}$	200	TO-252 (DPAK)
ISL9V2040S3S	10	1.45	6A, 4.5V	2360	400	I_C = 2mA, R = 1k, $V_{GE = 0V}$	200	TO-263 (D2PAK)
ISL9V2040P3	10	1.45	6A, 4.5V	2360	400	I_C = 2mA, R = 1k, $V_{GE = 0V}$	200	TO-220 3-LEAD
ISL9V2540S3ST	10	1.45	6A, 4.5V	2360	400	I_C = 2mA, R = 1k, $V_{GE = 0V}$	250	TO-263 (D2PAK)
ISL9V3036D3S	17	1.6	6A, 4V	2800	360	I_C = 2mA, R = 1k, $V_{GE = 0V}$	300	TO-263 (D2PAK)
ISL9V2040D3S	17	1.6	6A, 4V	2800	360	I_C = 2mA, R = 1k, $V_{GE = 0V}$	300	TO-263 (D2PAK)
ISL9V3036P3	17	1.6	6A, 4V	2800	360	I_C = 2mA, R = 1k, $V_{GE = 0V}$	300	TO-263 (D2PAK)
ISL9V3040D3S	17	1.6	6A, 4V	2800	400	I_C = 2mA, R = 1k, $V_{GE = 0V}$	300	TO-252 (DPAK)
ISL9V3040S3S	17	1.6	6A, 4V	2800	400	I_C = 2mA, R = 1k, $V_{GE = 0V}$	300	TO-263 (D2PAK)
ISL9V3040P3	17	1.6	6A, 4V	2800	400	I_C = 2mA, R = 1k, $V_{GE = 0V}$	300	TO-220 3-LEAD
FGD3040G2_F085[1]	23.2	1.15	6A, 4V	2000	400	I_C = 2mA, R = 1k, $V_{GE = 0V}$	300	TO-252 (DPAK)
FGB3236_F085	27	1.6	6A, 4V	2600	360	I_C = 2mA, R = 1k, $V_{GE = 0V}$	320	TO-263 (D2PAK)
FGI3236_F085	27	1.6	6A, 4V	2600	360	I_C = 2mA, R = 1k, $V_{GE = 0V}$	320	TO262 (I2PAK)
FGD3440G2_F085[1]	25	1.1	6A, 4V	2300	400	I_C = 2mA, R = 1k, $V_{GE = 0V}$	335	TO-252 (DPAK)
ISL9V5036S3S	31	1.6	6A, 4V	2800	360	I_C = 2mA, R = 1k, $V_{GE = 0V}$	500	TO-263 (D2PAK)
ISL9V5036P3_F085	31	1.6	6A, 4V	2800	360	I_C = 2mA, R = 1k, $V_{GE = 0V}$	500	TO-220 3-LEAD
ISL9V5045S3ST	43	1.6	6A, 4V	2800	450	I_C = 2mA, R = 1k, $V_{GE = 0V}$	500	TO-262 (D2PAK)

[1] EcoSPARK® 2 Ignition IGBT

Current Sensing Ignition IGBTs

Product Number	I_C @ 110°C (A)	$V_{CE(sat)}$ Max. (V)		t_f Typ. (ns)	Clamp Voltage		Current Sense Ratio	SCIS Energy (Max.) (mJ)	Package
		Max. (V)	Test Condition @ 25°C		Typ.(V)	Test Condition @ -40°C to 150°C			
FGB3040CS	19	1.3	6A, 4V	2600	4100	I_C = 2mA, R = 1k, $V_{GE = 0V}$	200:1	300	TO263-6

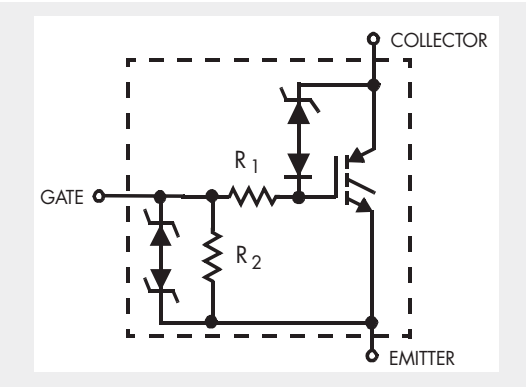

Ignition IGBT Internal Structure

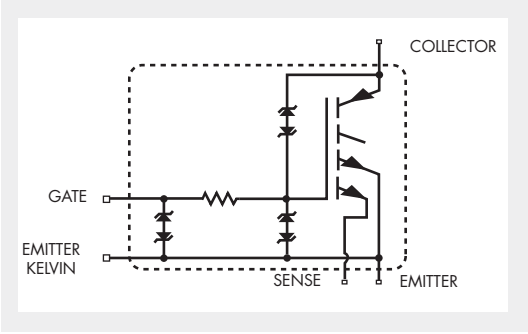

N-Channel Current Sensing Ignition IGBT FGB3040CS

Ultrafast Rectifiers

Product Number	Configuration	V_{RRM} (V)	$I_{F(av)}$ (A)	I_{FSM} (A)	V_F Max. @150°C (V)	Softness Factor (ta/tb)	t_{rr} Max. (nS)	I_R Max. @ 25°C (µA)	$R_{\theta JC}$ (°C/W)	Package
FFB20UP20DN_F085	Dual, Common Cathode	200	10	100	1	3.5	27	10	3.5	TO-263 (D2PAK)
RURD620CCS9A_F085	Dual, Common Cathode	200	6	60	0.83	2	30	100	3.5	TO-252 (DPAK)
RURD660S9A_F085[1]	Single	600	6	60	1.2	1.75	55	100	3	TO-252 (DPAK)
RURD4120S9A_F085	Single	1200	4	40	1.9	1.43	70	100	3	TO-252 (DPAK)

[1] *Contact Fairchild for Availability*

Hyperfast Rectifiers

Product Number	Configuration	V_{RRM} (V)	$I_{F(av)}$ (A)	I_{FSM} (A)	V_F Max. @150°C (V)	Softness Factor (ta/tb)	t_{rr} Max. (nS)	I_R Max. @ 25°C (µA)	$R_{\theta JC}$ (°C/W)	Package
RHRD660S9A_F085	Single	600	6	60	1.7	1.88	30	100	3	TO-252 (DPAK)
RHRP860_F085	Single	600	8	100	1.9	1.8	30	100	2	TO-220AC

Stealth™ Rectifiers - Soft Recovery

Product Number	Configuration	V_{RRM} (V)	$I_{F(av)}$ (A)	I_{FSM} (A)	V_F Max. @150°C (V)	Softness Factor (ta/tb)	t_{rr} Max. (nS)	I_R Max. @ 25°C (µA)	$R_{\theta JC}$ (°C/W)	Package
FFD08S60S_F085	Single	600	8	80	1.6	0.6	30	100	3	TO-252 (DPAK)

High-Voltage (HVIC) Gate Drivers

Fairchild's High-Voltage Gate Drivers (HVICs) are designed for DC and multiphase motor drive, DC-DC converter, inverter, high side load switch, Piezo-Injector and other applications. They are fully AEC-Q100 compliant, and feature high noise immunity, low power consumption, undervoltage lockout and a wide operating temperature range of -40°C to +125°C.

HVIC High-Side Drivers

Product Number	Floating Offset Voltage (Max.) (V)	Reset Input	Recharge	Supply Voltage (Min.) (V)	Supply Voltage (Max.) (V)	t_{ON}/t_{OFF} typ. (nS)	t_r/t_f typ. (nS)	Pulsed Output Current (mA)	Package
FAN7171_F085	600	No	Bootstrap	10	20	150/150	25/15	4000/4000	SO-8
FAN7081_GF085	600	No	Bootstrap	10	20	130/140	15/10	250/500	SO-8
FAN7083_GF085	600	Yes	Bootstrap	10	20	115/90	200/25	200/400	SO-8
FAN7085_GF085	300	No	Bootstrap with Internal Current Path	4.5	20	560/150	65/25	450/450	SO-8

HVIC Half-Bridge (High- and Low-Side)

Product Number	Floating Offset Voltage (Max.) (V)	Reset Input	Recharge	Supply Voltage (Min.) (V)	Supply Voltage (Max.) (V)	Deadtime	t_{ON}/t_{OFF} (nS)	t_R/t_F (nS)	Pulsed Output Current (mA)	Package
FAN7080_GF085	600	No	Bootstrap	5.5	20	Adjustable 650-2100	750/130	40/25	300/600	SO-8
FAN7190_F085	600	No	Bootstrap	10	22	N/A	140/140	25/20	4500/4500	SO-8

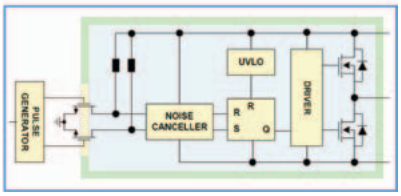

HVIC High-Side Isolation

HIGH-SPEED, LOW-SIDE, GATE DRIVERS

Low-Side Gate Drivers

Fairchild's line of high-speed, low-side gate drivers provide high peak currents of several amps that are needed to switch Power MOSFETs efficiently. These provide internal power-up protection, high noise immunity and appropriate power dissipation for 125°C operation.

Input level flexibility is provided with versions for both CMOS, TTL and external threshold levels. Output performance is optimized by a proprietary compound MillerDrive™ architecture for strong gate drive current and low voltage drop. Industry standard pinouts allow easy migration to Fairchild's MillerDrive for improved design performance.

Additionally, the outputs are held low if no input signal is present for fail-safe operation. The low well-matched propagation delay, low quiescent current, fail-safe input and under voltage lockout features provide for fail-safe design with minimal component count. Fairchild's automotive gate drivers are all AEC-Q100 qualified and operate over a –40 to 125°C ambient temperature range.

SOIC-8

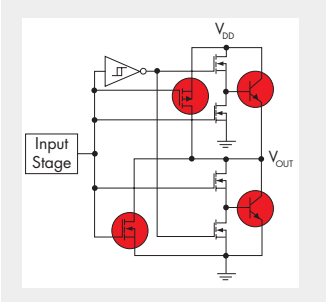

MillerDrive™ Output Architecture

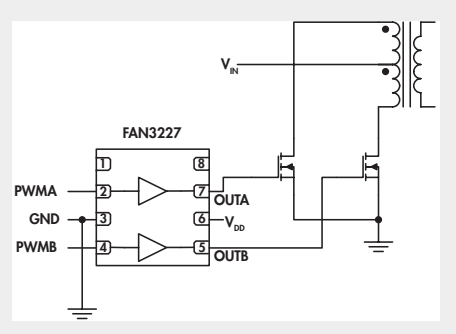

Low-Side Gate Drivers

Product Number	V_{DD} Range (V)	Max. V_{IO} to GND (V)	Enable Pin	Input	Input Thresholds	Number of Channels	Pulsed Output Current (mA)	Output Propagation Delay (ns)	Propagation Delay Matching (ns)	No. of GND Pins	Package
FAN3216TMX_F085 FAN3216CMX_F085	4.5-18.0	20	No	Single Input Inverting	TTL CMOS	2	2000	20	< 2	1	SO-8
FAN3226TMX_F085 FAN3226CMX_F085	4.5-18.0	20	Yes	Single Input Inverting	TTL CMOS	2	2000	20	< 2	1	SO-8
FAN3217TMX_F085 FAN3217CMX_F085	4.5-18.0	20	No	Single Input Non-Inverting	TTL CMOS	2	2000	20	< 2	1	SO-8
FAN3227TMX_F085 FAN3227CMX_F085	4.5-18.0	20	Yes	Single Input Non-Inverting	TTL CMOS	2	2000	20	< 2	1	SO-8
FAN3228TMX_F085 FAN3228CMX_F085	4.5-18.0	20	No	Dual Input Inverting & Non Inverting	TTL CMOS	2	2000	20	< 2	1	SO-8
FAN3229TMX_F085 FAN3229CMX_F085	4.5-18.0	20	Yes	Dual Input Inverting & Non Inverting	TTL CMOS	2	2000	20	< 2	1	SO-8
FAN3213TMX_F085 FAN3213CMX_F085	4.5-18.0	20	No	Single Input Inverting	TTL CMOS	2	4000	20	< 2	1	SO-8
FAN3223TMX_F085 FAN3223CMX_F085	4.5-18.0	20	Yes	Single Input Inverting	TTL CMOS	2	4000	20	< 2	1	SO-8
FAN3214TMX_F085 FAN3214CMX_F085	4.5-18.0	20	No	Single Input Non-Inverting	TTL CMOS	2	4000	20	< 2	1	SO-8
FAN3224TMX_F085 FAN3224CMX_F085	4.5-18.0	20	Yes	Single Input Non-Inverting	TTL CMOS	2	4000	20	< 2	1	SO-8
FAN3225TMX_F085 FAN3225CMX_F085	4.5-18.0	20	No	Dual Input Inverting & Non Inverting	TTL CMOS	2	4000	20	< 2	1	SO-8
FAN3121TMX_F085 FAN3121CMX_F085	4.5-18.0	20	Yes	Single Input Inverting	TTL CMOS	1	9000	20	< 2	2	SO-8
FAN3122TMX_F085 FAN3122CMX_F085	4.5-18.0	20	Yes	Single Input Non-Inverting	TTL CMOS	1	9000	20	< 2	2	SO-8

FDBS09H04 and FDDS10H04 Smart High-Side Switches

The FDBS09H04 and FDDS10H04 devices provide ratiometric current monitoring of loads by a CPU, allowing the diagnostic thresholds to be application specific. They can be used with PWM of lighting loads for smart load management. The internal reverse battery protection scheme allows for direct drive of loads which can operate under reverse battery without damage. They also can be used to drive inductive loads, with robust EAS ratings.

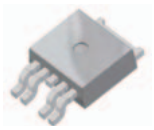

TO252-5L

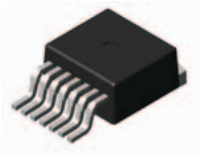

TO263-7L

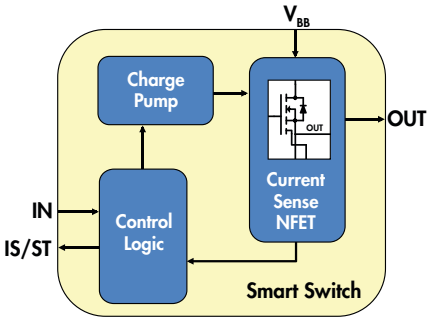

FDDS100H06 Smart High-Side Switch

The FDDS100H06 has fixed diagnostic limits for open and short circuit. The interface is directly compatible with microprocessor logic. It also is compatible with PWM lighting applications and inductive loads.

Smart High-Side Switches

Product Number	V_{BB} (V)	Output Clamp Typ. (V)	$R_{DS(ON)}$ @ V_{BB} = 12V T_J = 25°C Max. (mΩ)	I_D Max. (A)	E_{AS} @ T_J = 150°C (mJ)	t_{ON} Typ. (µs)	t_{OFF} Typ. (µs)	Protection Features	Current Sense Ratio (K_{ILIS})	Current Limit @ T_J = 25°C Typ. (A)	P_D (W)	$R_{\Theta JC}$ (°C/W)	Package
FDBS09H04A_F085A	5.5 to 38	42	9	48	300	180	150	OLP, UVLO, Load-Dump, Reverse Battery	13200	85 @ 12V	81	0.8	TO-263-7L
FDDS10H04A_F085A	5.5 to 38	42	10	41	288	160	110	OLP, UVLO, Load-Dump, Reverse Battery	11000	70 @ 12V	59	1	TO-252-5L
FDDS100H06_F085[1]	5.5 to 37	56.5	100	4	425	70	66	OLP, UVLO, Load-Dump, Reverse Battery	NA	12 @ 12V	41.6	3	TO-252-5L

[1] *Logic Level Interface*

High-Current Half Bridge

The FAN7093 is capable of PWM above audio frequencies for EMC compatibility. It can be used alone to drive high current motors such as pumps and cooling fans. The devices can be paired for full-bridge capability, for applications such as reversible cooling fans.

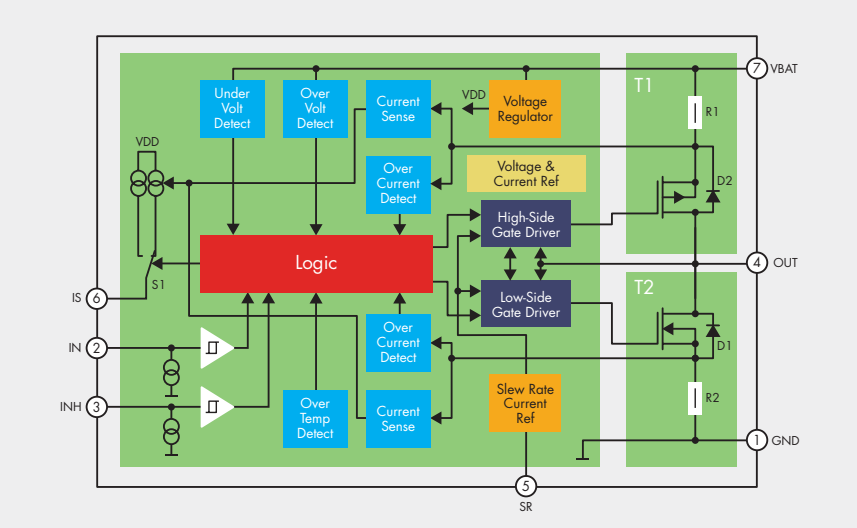

High-Current Bridge

Product Number	V_{BB} (V)	$R_{DS(ON)}$ @ V_{BB} = 14V -40<T_J<150°C Max. (mΩ)		I_D Max (A)	Slew Rate Min to Max. (V/µs)	t_{ON} Typ. (µs)	t_{OFF} Typ. (µs)	Protection Features	Current Sense Ratio (K_{ILIS})	$R_{\Theta JC}$ (°K/W)	Package
		High Side	Low Side								
FAN7093_F085	5.0 to 28	12.3	18.2	±46	1 to 20	2.1	2.1	OTP, OLP, UVLO, Load-Dump, Peak Current Limit	8500	0.8	TO-263-7L

Automotive Power Modules

Fairchild provides standard and customized Automotive Power Modules for applications such as brushless DC motor control in Electrical Power Steering (EPS) and Electrohydraulic Power Steering (EHPS), transmission control, HVAC and DC-DC converters and solid state switches for voltage levels between 12V and 600V and current levels up to and beyond 160A.

Design Advantages Include:

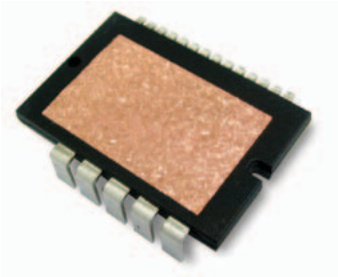

- 3-phase inverter, H-bridge, solid state switch and other configurations
- Active components
  – MOSFETs, IGBTs, diodes
- Integrated passive and active components (optional)
  – 1% tolerance DC bus current sensing
  – NTC thermistor for temperature feedback
  – Built-in gate drivers
- High current capability
- Easy and effective thermal interface with exposed and electrically isolated substrate
- Low total electrical resistance
- Low parasitic inductance, low EMI
- Compact size
- Quick and easy installation
- Interconnection with terminals by screws, soldering or welding

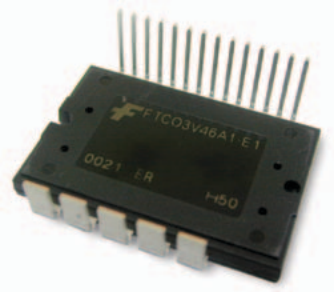

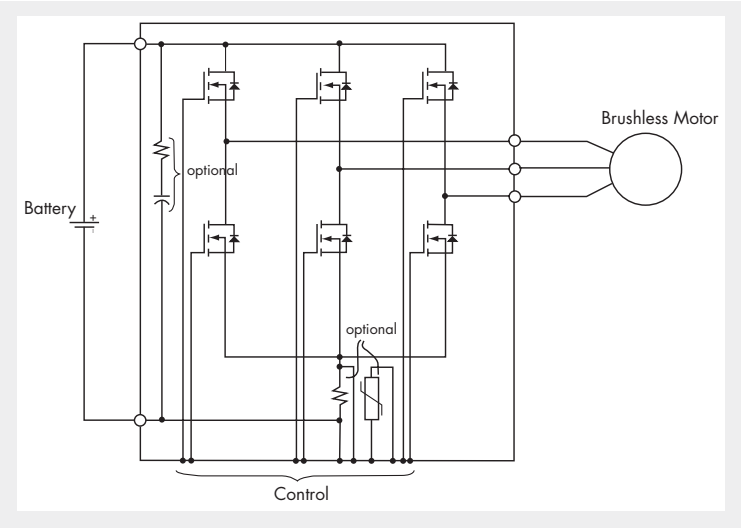

Electric Power Steering (EPS) Module Schematic

Note: All materials present in the power module meet UL flammability rating class 94V-0 or higher. 100% Pb free.

FAIRCHILD SEMICONDUCTOR®

FOR A COMPLETE LISTING OF SALES REPRESENTATIVES AND SALES OFFICES, VISIT:
www.fairchildsemi.com/cf/sales_contacts

FOR INFORMATION ON FAIRCHILD PRODUCTS, TRADESHOWS, SEMINARS AND OTHER ITEMS, REGISTER HERE:
www.fairchildsemi.com/my_fairchild

For datasheets, application notes, samples and more, please visit: **www.fairchildsemi.com**

PRODUCTS | APPLICATIONS | DESIGN SUPPORT | ABOUT FAIRCHILD

POWER MANAGEMENT

Advanced Load Switches
- Advanced Current Limited Load Switches
- Slew Rate Controlled Load Switches

Backlighting Unit (BLU)
- CCFL Inverter ICs
- LED BLU Driver ICs

Battery Management
- Battery Charger ICs
- Current Sensing

Diodes & Rectifiers
- Bridge Rectifiers
- Diacs
- Rectifiers
- Schottky Diodes & Rectifiers
- Small Signal Diodes
- Transient Voltage Suppressors (TVS)
- Zener Diodes

Ground Fault Interrupt (GFI) Controllers
- Ground Fault Interrupt (GFI) Controllers

IGBTs
- Discrete IGBTs

MOSFET and IGBT Gate Drivers
- All Drivers
- 3-Phase Drivers
- Half-Bridge Drivers
- High-Side Drivers
- Low-Side Drivers
- Synchronous Rectifier Drivers

MOSFETs
- Discrete MOSFETs
- Integrated Load Switches
- MOSFET/Schottky Combos

Motion Control
- BLDC/PMSM Controller
- SPM® (Smart Power Modules)
- PFC SPM® (Smart Power Modules)

Non-Isolated DC-DC
- Charge-pump Converters
- DrMOS FET plus Driver Multi-Chip Modules
- Step-down Controllers (External Switch)
- Step-down Regulators, Non-Synchronous (Integrated Switch)
- Step-down Regulators, Synchronous (Integrated Switch)
- Step-up Regulators (Integrated Switch)

Off-Line & Isolated DC-DC
- AC-DC Linear Regulators
- Flyback & Forward PWM Controllers
- Flyback & Forward PWM Controllers with Integrated MOSFET
- LLC Resonant & Asymmetric Half Bridge PWM Controllers
- LLC Resonant & Asymmetric Half Bridge PWM Controllers with Integrated MOSFETs
- Primary-Side Regulation CV/CC Controllers
- Primary-Side Regulation CV/CC Controllers with Integrated MOSFET
- Standard PWM Controllers
- Supervisory/Monitor ICs

Power Factor Correction
- Continuous Conduction Mode (CCM) PFC Controllers
- Critical/Boundary Conduction Mode (CrCM/BCM) PFC Controllers
- Interleaved PFC Controllers
- PFC + PWM Combination (Combo) Controllers

Transistors
- BJTs
- Darlingtons
- Digital/Bias-Resistor Transistors
- JFETs
- RF Transistors
- Small Signal Transistors

Voltage Regulators
- LDOs
- Positive Voltage Linear Regulators
- Negative Voltage Linear Regulators
- Shunt Regulators
- Voltage Detector
- Voltage Stabilizer
- Voltage to Frequency Converter

ANALOG & MIXED SIGNAL

Amplifiers & Comparators
- Comparators
- Operational Amplifiers

Audio Amplifiers
- Audio Subsystems
- Audio Headphone Amplifiers
- Audio Speaker Amplifiers
- Digital Microphone Amplifiers

Battery Protection ICs
- Battery Protection ICs

Interface
- LVDS
- Serializers/Deserializers (µSerDes™)
- USB Transceivers

Signal Conditioning
- Video Filter Drivers
- Video Switch Matrix/Multiplexers

Signaling, Sensing & Timing
- Signaling, Sensing & Timing
- Timing

Switches
- Accessory Switches
- Analog Switches
- Audio Jack Detection Switches
- Audio Switches
- Bus Switches
- MIPI Switches
- Multi-media Switches
- USB Switches
- Video Switches

LOGIC

Buffers, Drivers, Transceivers
- Buffers
- Line Drivers
- Transceivers

Flip Flops, Latches, Registers
- Counters
- Flip Flops
- Inverters
- Latches
- Registers

Gates
- AND Gates
- Configurable Gates
- NAND Gates
- NOR Gates
- OR Gates
- Schmitt Triggers

Multiplexer/Demultiplexer/Decoders
- Decoders
- Demultiplexers
- Multiplexers
- Multivibrators

Voltage Level Translators
- Voltage Level Translators

LIGHTING ICs
- Fluorescent Lamp ICs
- HID ICs
- LED Lighting ICs
- Portable LED Drivers

OPTOELECTRONICS

High Performance Optocouplers
- High Speed Logic Gate
- High Performance Transistor
- Low Voltage, High Performance
- Specific Function

IGBT/MOSFET Gate Drivers
- IGBT/MOSFET Gate Drivers

Infrared
- Ambient Light Sensors
- Emitting Diodes
- Optical Interrupt Switches
- Photo Sensors
- Photo Sensor – Transistors
- Reflective Sensors

Phototransistor Optocouplers
- Isolated Error Amplifier
- Photo Darlington Output
- Phototransistor Output - DC Sensing Input
- Phototransistor Output - AC Sensing Input

TRIAC Driver Optocouplers
- Random Phase TRIAC Driver
- Zero Crossing TRIAC Driver

AUTOMOTIVE PRODUCTS

Automotive Discrete Power
- Automotive Ignition IGBTs
- Automotive IGBTs
- Automotive N-Channel MOSFETs
- Automotive P-Channel MOSFETs
- Automotive Rectifiers

Automotive Gate Drivers
- High Voltage Gate Drivers (HVICs)
- Low Voltage Gate Drivers

Automotive Smart Power Switches
- Automotive Smart Power Switches

CIRCUIT PROTECTION

Reverse Polarity Protection
- Blocking Diodes
- Reverse Bias Protection Switches
- Schottky diodes

Transient Voltage Suppressors (TVS)
- Mid Power TVS
- Power TVS (> 400W)

Trademarks, service marks, and registered trademarks are the property of Fairchild Semiconductor or their respective owners. For a listing of Fairchild Semiconductor trademarks and related information, please see: www.fairchildsemi.com/legal
Lit code: 980024-009 © 2012 Fairchild Semiconductor. All Rights Reserved.

Solutions for Your Success™

О компании

ООО "ТрейдЭлектроникс" - это оперативные поставки широкого спектра электронных компонентов отечественного и импортного производства напрямую от производителей и с крупнейших мировых складов. Реализуемая нашей компанией продукция насчитывает более полумиллиона наименований.

Благодаря этому наша компания предлагает к поставке практически не ограниченный ассортимент компонентов как оптовыми, мелкооптовыми партиями, так и в розницу.

Наличие собственной эффективной системы логистики обеспечивает надежную поставку продукции по конкурентным ценам в точно указанные сроки.

Срок поставки со стоков в **Европе и Америке – от 3 до 14 дней.**

Срок поставки из **Азии – от 10 дней.**

Благодаря развитой сети поставщиков, помогаем в поиске и приобретении экзотичных или снятых с производства компонентов.

Предоставляем спец цены на элементы для создания инженерных сэмплов.

Упорный труд, качественный результат дают нам право быть уверенными в себе и надежными для наших клиентов.

Наша компания это:

- Гарантия качества поставляемой продукции
- Широкий ассортимент
- Минимальные сроки поставок
- Техническая поддержка
- Подбор комплектации
- Индивидуальный подход
- Гибкое ценообразование

Наша организация особенно сильна в поставках модулей, микросхем, пассивных компонентов, ксайленсах (XC), EPF, EPM и силовой электроники.

Большой выбор предлагаемой продукции, различные виды оплаты и доставки, позволят Вам сэкономить время и получить максимум выгоды от сотрудничества с нами!

Trade Electronics.ru

гарантия бесперебойности производства и качества выпускаемой продукции

Перечень производителей, продукцию которых мы поставляем на российский рынок

AMD
ANALOG DEVICES
BOURNS
Coilcraft
élantec Semiconductor, Inc.
HARRIS
Infineon
JRC
MICREL
MOTOROLA
nichicon
PHILIPS
ROHM
SGS-THOMSON
Sipex
TAIYO YUDEN
TOKO
ZILOG
Winbond
Allegro
ATMEL
BURR - BROWN
EXAR
HITACHI
intel
Lattice
muRata
OKI
QUALCOMM
SAMSUNG
SHARP
SONY
TDK
TOSHIBA
KYOCERA
ALTERA
AVX
CITILYST
CYPRESS
FAIRCHILD SEMICONDUCTOR
HOLTEK
International IOR Rectifier
LINEAR TECHNOLOGY
MITSUBISHI
National Semiconductor
ON Semiconductor
REALTEK
SANYO
SHINDENGEN
SGS
TECCOR
TUNDRA
XILINX
Amphenol
Bay Linear
CIRRUS LOGIC
DALLAS
FUJITSU
IDT
intersil
MAXIM
molex
NEC
Panasonic
RENESAS
SII
SIEMENS
ST
Texas Instruments
VISHAY
ZETEX SEMICONDUCTORS

Trade Electronics.ru

гарантия бесперебойности производства и качества выпускаемой продукции

С удовольствием будем прорабатывать для Вас поставки всех необходимых компонентов по текущим запросам для скорейшего выявления групп элементов, по которым сотрудничество именно с нашей компанией будет для Вас максимально выгодным!

С уважением,

Менеджер отдела продаж ООО

«Трейд Электроникс»

Шишлаков Евгений

8 (495)668-30-28 доб 169

manager28@tradeelectronics.ru

http://www.tradeelectronics.ru/