Data Sheet

FasTrak Micro E-Grade Family

DC-DC Converter Module

Shown actual size:
2.28 x 1.45 x 0.5 in
57,9 x 36,8 x 12,7 mm

Features

- Input voltages: 24, 48, 300 & 375 V
- DC outputs: 3.3 V – 48 V
- Programmable output: 10 to 110%
- Regulation: ±0.5% no load to full load
- Efficiency: Up to 88%
- Max operating temp: 100°C, full load
- Power Density: Up to 90 W/cubic Inch
- Parallelable, with N+M fault tolerance
- Low noise ZCS/ZVS architecture

Product Overview

These DC-DC converter modules use advanced power processing, control and packaging technologies to provide the performance, flexibility, reliability and cost effectiveness of a mature power component. High frequency ZCS/ZVS switching provide high power density with low noise and high efficiency.

Applications

Off-line systems with autoranging or PFC front-ends, industrial and process control, distributed power, medical, ATE, communications, defense, aerospace

Part Numbering

e.g. V300C12E150BL2

V [ ] C [ ] E [ ] B [ ] [ ]

Input Voltage
- ***24:*** *18 – 36 Vin*
- ***48:*** *36 – 75 Vin*
- ***300:*** *180 – 375 Vin*
- ***375:*** *250 – 425 Vin*

Output Voltage
- ***3V3:*** *3.3V*
- ***5:*** *5 V*
- ***12:*** *12 V*
- ***15:*** *15 V*
- ***24:*** *24 V*
- ***28:*** *28 V*
- ***48:*** *48 V*

Pin Style
- ***Blank:*** *Short Tin/Lead*
- ***L:*** *Long Tin/Lead*
- ***S:*** *Short Gold*
- ***N:*** *Long Gold*

Output Power (Watts)

Input	3.3 Vout	5 Vout	>5 Vout
24 V	75	100	100
48 V	75	100	150
300 V	75	100	150
375 V	75	100	150

Baseplate
- ***Blank:*** *Slotted*
- ***1:*** *Threaded*
- ***2:*** *Through-hole*

For a description of pin options, see page 6. Baseplate options include slotted flanges, threaded and through-hole. See page 7 for dimensions. For other package sizes and powerlevels, see the FasTrak Maxi (full size) and FasTrak Micro (quarter size) datasheets.

Absolute Maximum Ratings

Parameter	Rating	Unit	Notes
+In to –In voltage			
24 Vin	-0.5 to +36	Vdc	
48 Vin	-0.5 to +75	Vdc	
300 Vin	-0.5 to +375	Vdc	
375 Vin	-0.5 to +425	Vdc	
PC to –In voltage	-0.5 to +7.0	Vdc	
PR to –In voltage	-0.5 to +7.0	Vdc	
SC to –Out voltage	-0.5 to +1.5	Vdc	
–Sense to –Out voltage	1.0	Vdc	
Isolation voltage (in to out)	3000	Vrms	
Isolation voltage (in to base)	1550	Vrms	
Isolation voltage (out to base)	500	Vrms	
Operating temperature	-10 to +100	°C	
Storage temperature	-20 to +125	°C	
Pin soldering temperature	500 (260)	°F (°C)	<5 sec; wave solder
Pin soldering temperature	750 (390)	°F (°C)	<7 sec; hand solder
Mounting torque	5 (0.57)	in-lbs (N-m)	6 each, # 4-40 or M3

Thermal Resistance and Capacity

Parameter	Min	Typ	Max	Unit
Baseplate to sink; flat, greased surface		0.24		°C/Watt
Baseplate to sink; thermal pad (P/N 20263)		0.21		°C/Watt
Baseplate to ambient		10.9		°C/Watt
Baseplate to ambient; 1000 LFM		2.8		°C/Watt
Thermal capacity		48		Watt-sec/°C

Set your site on VICOR at www.vicorpower.com

ELECTRICAL CHARACTERISTICS

Electrical characteristics apply over the full operating range of input voltage, output load (resistive) and baseplate temperature, unless otherwise specified. All temperatures refer to the operating temperature at the center of the baseplate.

MODULE OPERATING SPECIFICATIONS

Parameter	Min	Typ	Max	Surge Withstand	Unit	Notes
Input voltage						
24 Vin	18	24	36	50	Vdc	<100 ms surge withstand
48 Vin	36	48	75	100	Vdc	
300 Vin	180	300	375	400	Vdc	
375 Vin	250	375	425	500	Vdc	
Output voltage setpoint			±1		%	Nominal input; full load; 25°C

MODULE OUTPUT VOLTAGE RELATED SPECIFICATIONS

Parameter	3.3V	5V	12V	15V	24V	28V	48V	Unit	Notes
Efficiency (typ.)	76.5	80.0	84.0	85.5	86.0	86.5	88.0	%	Nominal input; 80% load; 25°C
Ripple and noise, p-p (typ.)	120	105	170	150	150	180	55	mV	Nominal input; full load; 25°C; 20MHz BW
Output OVP setpoint (nom.)	4.3	6.3	14.3	17.8	28.1	32.7	55.7	Volts	25°C; recycle input voltage to restart (1 minute off)
Dissipation, standby (typ.)	3.4	4.4	5.0	7.0	4.9	4.6	4.0	Watts	No load; nominal input
Load regulation (max.)	0.4	0.4	0.2	0.2	0.2	0.3	0.2	±% Vout	No load to full load; nominal input
Current limit (typ.)	115	115	115	115	115	115	115	% Iout	Output voltage 95% of nominal
Short circuit current (typ.)	115	115	115	115	115	115	115	% Iout.	Output voltage <250mV

MODULE INPUT SPECIFICATIONS

Parameter	24 Vin	48 Vin	300 Vin	375 Vin	Units	Notes
Undervoltage turn-on	17.5	34.9	175	243	Vdc	Typical value
Undervoltage turn-off	15.3	30.5	153	212	Vdc	Typical value
Overvoltage turn-off/on	37.8	78.8	N/A	446	Vdc	Typical value

Note: 300 Vin models do not have overvoltage turn-off.

MODULE OUTPUT SPECIFICATIONS

Parameter	Min	Typ	Max	Unit	Notes
Line regulation		±0.5		%	Low line to high line; full load
Temperature regulation		±0.005		% / °C	Over operating temperature range
Power sharing accuracy		±5		%	10 to 100% of full load
Programming range	10		110	%	Of nominal output voltage. For trimming below 90% of nominal, a minimum load of 10% of maximum rated power may be required.

Note: For important information relative to applications where the converter modules are subject to continuous dynamic loading, contact Vicor applications engineering at 800-927-9474.

Set your site on VICOR at www.vicorpower.com

MODULE CONTROL SPECIFICATIONS

Parameter	Min	Typ	Max	Unit	Notes
PRIMARY SIDE (PC = Primary Control; PR = Parallel)					
PC bias voltage	5.50	5.75	6.00	Vdc	PC current = 1.0 mA
current limit	1.5	2.1	3.0	mA	PC voltage = 5.5V
PC module disable	2.3	2.6	2.9	Vdc	Must be able to sink ≥4 mA. See Fig. 1
PC module enable delay		4	7	ms	
PC module alarm			0.5	Vavg	UV, OV, OT, module fault. See Figs. 2 and 4
PR emitter amplitude	5.7	5.9	6.1	Volts	PR load >30 ohms, < 30 pF
PR emitter current	150			mA	
PR receiver impedance	375	500	625	ohms	25°C
PR receiver threshold	2.4	2.5	2.6	Volts	Minimum pulse width: 20ns
PR drive capability			12	modules	Without PR buffer amplifier
SECONDARY SIDE (SC = Secondary Control)					
SC bandgap voltage	1.21	1.23	1.25	Vdc	Referenced to –Out
SC resistance	990	1000	1010	ohms	
SC capacitance		0.033		µF	
SC module alarm		0		Vdc	With open trim; referenced to –Out. See Fig. 6

MODULE GENERAL SPECIFICATIONS

Parameter	Min	Typ	Max	Unit	Notes
Isolation voltage (in to out)	3000			Vrms	Complies with reinforced insulation requirements
Isolation voltage (in to base)	1550			Vrms	Complies with basic insulation requirements
Isolation voltage (out to base)	500			Vrms	Complies with operational insulation requirements
Isolation resistance (in to out)		10		megohms	
Weight		2.1 (60)	2.3(66)	ounces (grams)	
Temperature limiting	100	115		°C	See Figs. 2 and 4
Agency approvals		cULus, TÜV, CE			UL60950, CSA0950, EN60950, IEC60950. With a fuse in series with the +Input

Note:
Specifications are subject to change without notice.
The latest data sheets for individual models are available on the Vicor website at vicorpower.com.

Set your site on VICOR at www.vicorpower.com

CONTROL FUNCTIONS - PC PIN

Module Enable/Disable

The module may be disabled by pulling PC below 2.3V with respect to the –Input. This may be done with an open collector transistor, relay, or optocoupler. Multiple converters may be disabled with a single transistor or relay either directly or via "OR'ing" diodes. See Figure 1.

Primary Auxiliary Supply

At 5.7V, PC can source up to 1.5mA. In the example shown in Figure 3, PC powers a module enabled LED.

Module Alarm

The module contains "watchdog" circuitry which monitors input voltage, operating temperature and internal operating parameters. In the event that any of these parameters are outside of their allowable operating range, the module will shut down and PC will go low. PC will periodically go high and the module will check to see if the fault (as an example, overtemperature) has cleared. If the fault has not been cleared, PC will go low again and the cycle will restart. The SC pin will go low in the event of a fault and return to its normal state after the fault has been cleared. See Figures 2 and 4.

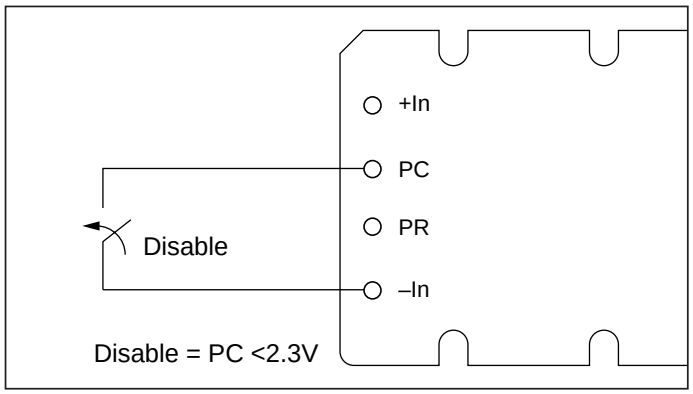

Figure 1—Module enable/disable.

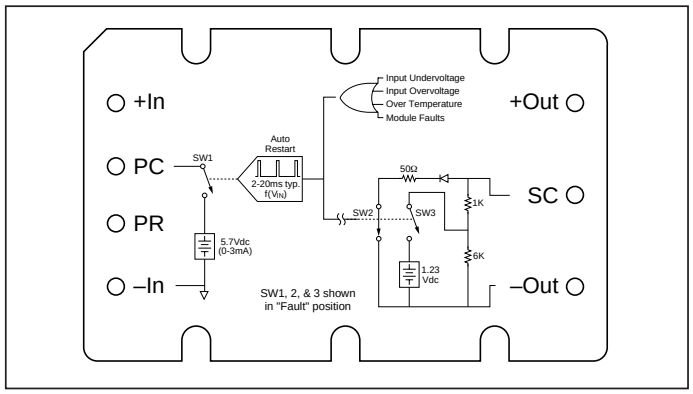

Figure 2—PC/SC module alarm logic.

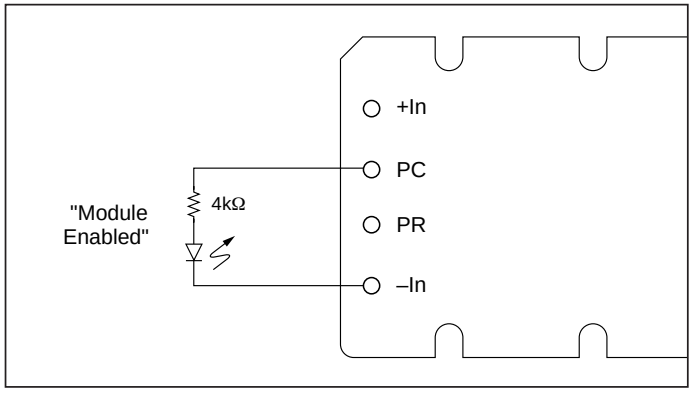

Figure 3—LED on-state indicator.

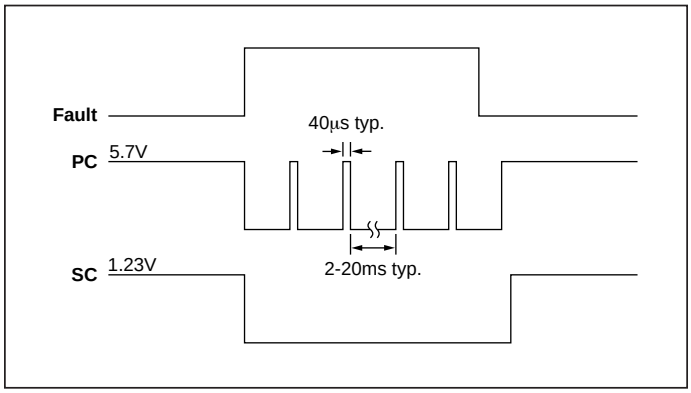

Figure 4—PC/SC module alarm timing.

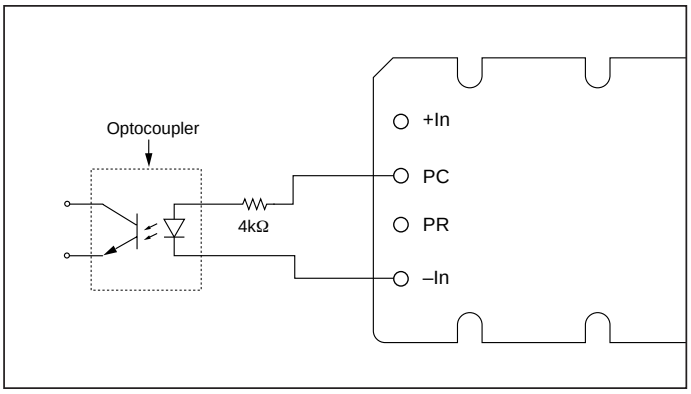

Figure 5—Isolated on-state indicator.

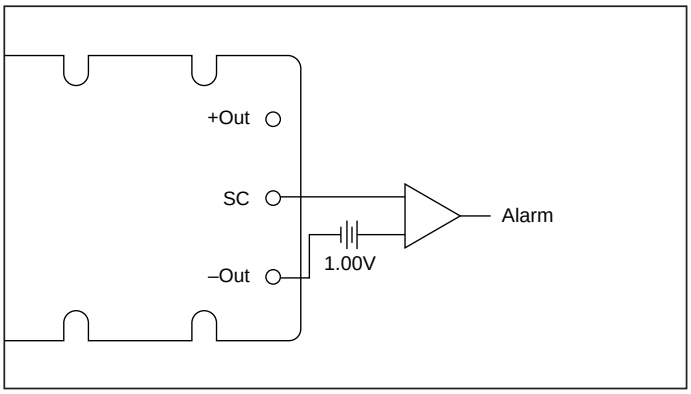

Figure 6—Secondary side on-state indicator.

Set your site on VICOR at www.vicorpower.com

Output Voltage Programming

The output voltage of the converter can be adjusted or programmed via fixed resistors, potentiometers or voltage DACs. See Figures 7 and 8.

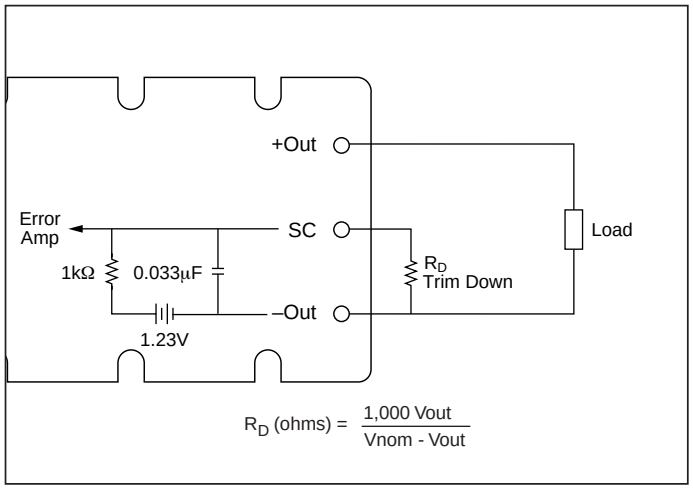

Figure 7—Output voltage trim down circuit.

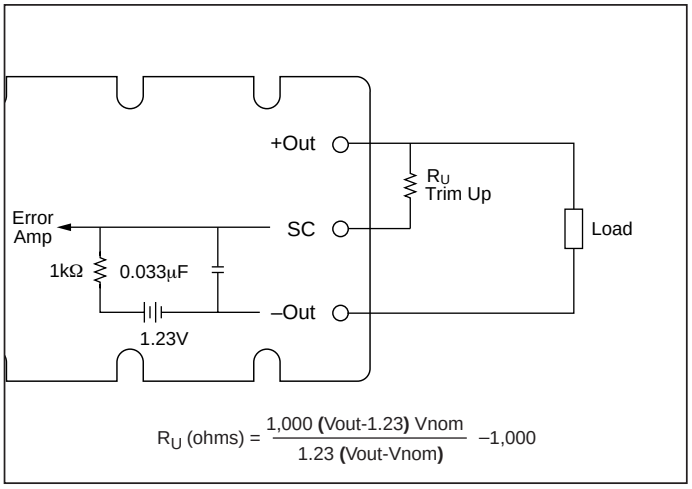

Figure 8—Output voltage trim up circuit.

Trim Down

1. This converter is <u>not</u> a constant power device – it has a constant current limit. Hence, available output power is reduced by the same percentage that output voltage is trimmed down. Do not exceed maximum rated output current.
2. The trim down resistor must be connected to the –Out pin.

Trim Up

1. The converter is rated for a maximum delivered power. To ensure that maximum rated power is not exceeded, reduce maximum output current by the same percentage increase in output voltage.
2. The trim up resistor must be connected to the +Out pin.
3. Do not trim the converter above maximum trim range (typically +10%) or the output over voltage protection circuitry may be activated.

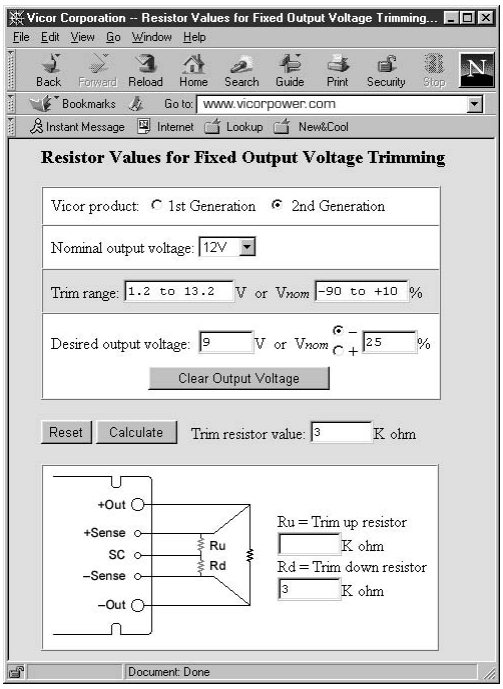

Trim resistor values calculated automatically:

On-line calculators for trim resistor values are available on the vicor website at: vicorpower.com/tools.html.

Resistor values can be calculated for fixed trim up, fixed trim down and for variable trim up or down cases for both 1st and 2nd Generation DC-DC converters.

In addition to trimming information, the web site and the Applications Manual also include design tips, applications circuits, EMC suggestions, thermal design guidelines and PDF data sheets for all available Vicor products.

Set your site on VICOR at www.vicorpower.com

Parallel Operation

The PR pin supports paralleling for increased power with N+1 (N+M) redundancy and phased array capability. Modules of the same input voltage, output voltage, and power level will current share if all PR pins are suitably interfaced.

Compatible interface architectures include the following:

DC coupled single-wire interface. All PR pins are directly connected to one another. This interface supports current sharing but is not fault tolerant. Minus In pins must be tied to the same electric potential. See Figure 9.

AC coupled single-wire interface. All PR pins are connected to a single communication bus through 0.001µF (500V) capacitors. This interface supports current sharing and is fault tolerant except for the communication bus. See Figure 10.

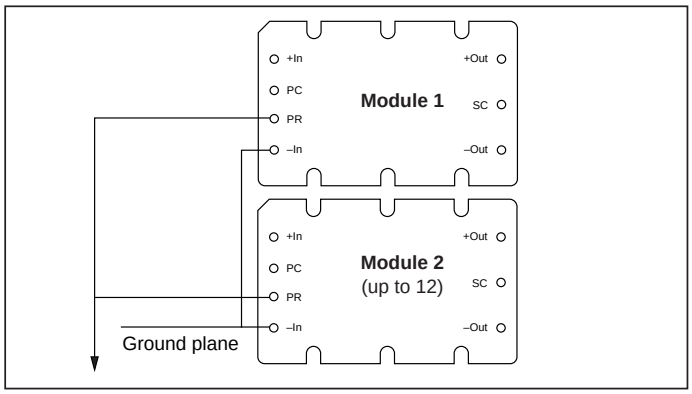

***Figure 9**—DC coupled single-wire interface.*

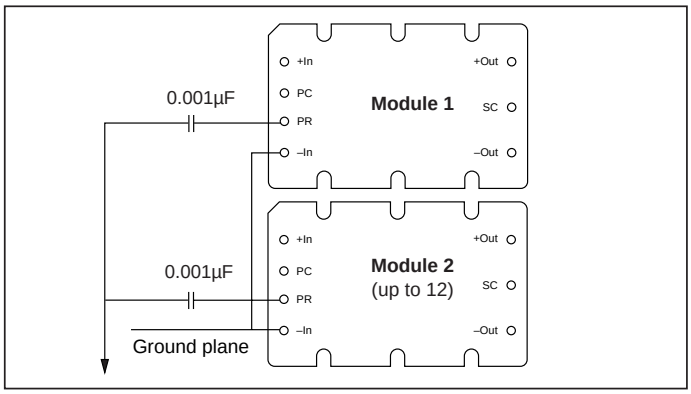

***Figure 10**—AC coupled single-wire interface.*

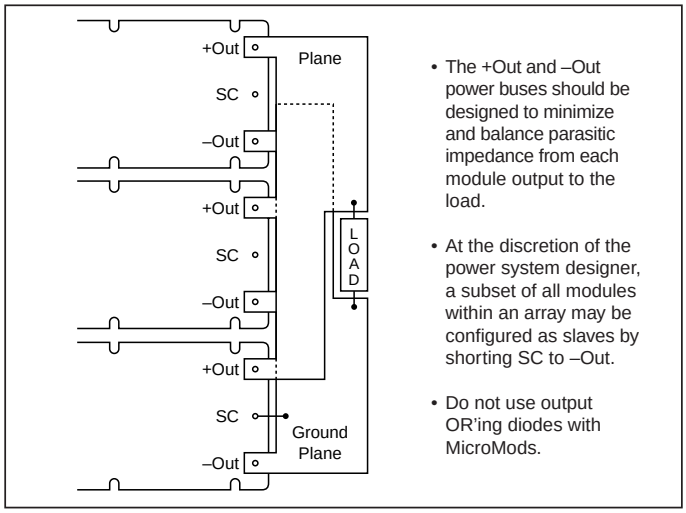

***Figure 11**—N+1 module array output connections.*

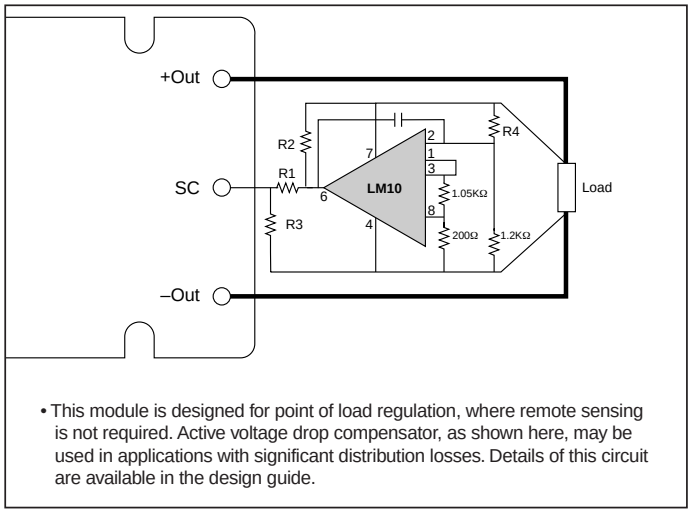

***Figure 12**—Voltage drop compensation.*

PIN STYLES *

Designator	Description	Notes
(None)	Short solder	Requires in-board, mounting
L	Long solder	On-board mounting for 0.065" boards
S	Short ModuMate	SurfMate or in-board socket mounting – RoHS compliant
N	Long ModuMate	On-board socket mounting – RoHS compliant

* *Pin style designator follows the "B" after the output power and precedes the baseplate designator. Ex. V375A24C600BN — Long ModuMate Pins*

Set your site on VICOR at www.vicorpower.com

MECHANICAL DRAWINGS

MODULE OUTLINE

Converter Pins		
No.	***Function***	***Label***
1	+In	+
2	Primary Control	PC
3	Parallel	PR
4	–In	–
5	–Out	–
6	Secondary Control	SC
7	+Out	+

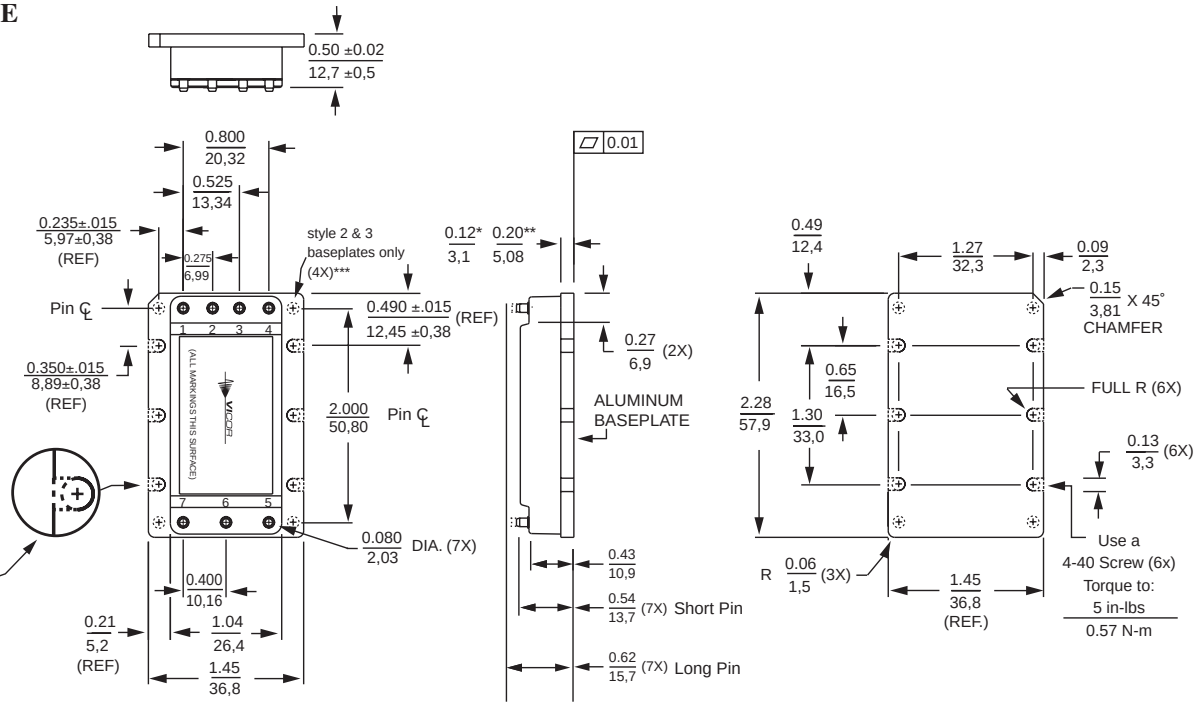

* Style 1 baseplate only
** Style 2 & 3 baseplates
*** Reserved for Vicor accessories. **Not for mounting**
℄ Center line

PCB MOUNTING SPECIFICATIONS

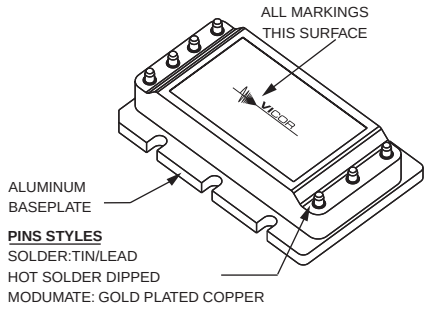

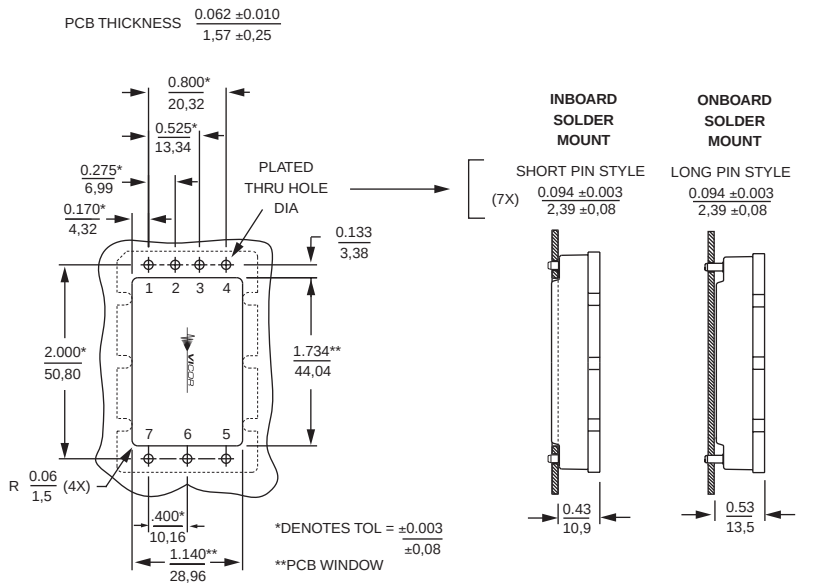

Unless otherwise specified, dimensions are in inches / mm

Decimals	Tol.	Angles
0.XX	±0.01 / ±0.25	±1°
0.XXX	±0.005 / ±0.127	

Set your site on VICOR at www.vicorpower.com

Vicor's comprehensive line of power solutions includes modular, high density DC-DC converters and accessory components, configurable power supplies, and custom power systems.

Information furnished by Vicor is believed to be accurate and reliable. However, no responsibility is assumed by Vicor for its use. No license is granted by implication or otherwise under any patent or patent rights of Vicor. Vicor components are not designed to be used in applications, such as life support systems, wherein a failure or malfunction could result in injury or death. All sales are subject to Vicor's Terms and Conditions of Sale, which are available upon request.

Specifications are subject to change without notice.

VICOR

Component Solutions for Your Power System

Vicor Corporation
25 Frontage Road
Andover, MA, USA 01810
Tel: 800-735-6200
978-470-2900
Fax: 978-475-6715

Email
Vicor Express: vicorexp@vicr.com
Technical Support: apps@vicr.com

Set your site on VICOR at www.vicorpower.com

О компании

ООО "ТрейдЭлектроникс" - это оперативные поставки широкого спектра электронных компонентов отечественного и импортного производства напрямую от производителей и с крупнейших мировых складов. Реализуемая нашей компанией продукция насчитывает более полумиллиона наименований.

Благодаря этому наша компания предлагает к поставке практически не ограниченный ассортимент компонентов как оптовыми, мелкооптовыми партиями, так и в розницу.

Наличие собственной эффективной системы логистики обеспечивает надежную поставку продукции по конкурентным ценам в точно указанные сроки.

Срок поставки со стоков в **Европе и Америке – от 3 до 14 дней.**

Срок поставки из **Азии – от 10 дней.**

Благодаря развитой сети поставщиков, помогаем в поиске и приобретении экзотичных или снятых с производства компонентов.

Предоставляем спец цены на элементы для создания инженерных сэмплов.

Упорный труд, качественный результат дают нам право быть уверенными в себе и надежными для наших клиентов.

Наша компания это:

- Гарантия качества поставляемой продукции
- Широкий ассортимент
- Минимальные сроки поставок
- Техническая поддержка
- Подбор комплектации
- Индивидуальный подход
- Гибкое ценообразование

Наша организация особенно сильна в поставках модулей, микросхем, пассивных компонентов, ксайленсах (XC), EPF, EPM и силовой электроники.

Большой выбор предлагаемой продукции, различные виды оплаты и доставки, позволят Вам сэкономить время и получить максимум выгоды от сотрудничества с нами!

Trade Electronics.ru

гарантия бесперебойности производства и качества выпускаемой продукции

Перечень производителей, продукцию которых мы поставляем на российский рынок

AMD
ANALOG DEVICES
BOURNS
Coilcraft
élantec Semiconductor, Inc.
HARRIS
Infineon
JRC
MICREL
MOTOROLA
nichicon
PHILIPS
ROHM
SGS-THOMSON
Sipex
TAIYO YUDEN
TOKO
ZILOG
Winbond
Allegro
ATMEL
BURR - BROWN
EXAR
HITACHI
intel
Lattice
muRata
OKI
QUALCOMM
SAMSUNG
SHARP
SONY
TDK
TOSHIBA
KYOCERA
ALTERA
AVX
CITILYST
CYPRESS
FAIRCHILD SEMICONDUCTOR
HOLTEK
International IOR Rectifier
LINEAR TECHNOLOGY
MITSUBISHI
National Semiconductor
ON Semiconductor
REALTEK
SANYO
SHINDENGEN
SGS
TECCOR
TUNDRA
XILINX
Amphenol
Bay Linear
CIRRUS LOGIC
DALLAS
FUJITSU
IDT
intersil
MAXIM
molex
NEC
Panasonic
RENESAS
SII
SIEMENS
ST
Texas Instruments
VISHAY
ZETEX SEMICONDUCTORS

Trade Electronics.ru

гарантия бесперебойности производства и качества выпускаемой продукции

С удовольствием будем прорабатывать для Вас поставки всех необходимых компонентов по текущим запросам для скорейшего выявления групп элементов, по которым сотрудничество именно с нашей компанией будет для Вас максимально выгодным!

С уважением,

Менеджер отдела продаж ООО

«Трейд Электроникс»

Шишлаков Евгений

8 (495)668-30-28 доб 169

manager28@tradeelectronics.ru

http://www.tradeelectronics.ru/