MICRF103

QwikRadio™ UHF ASK Transmitter

Final

General Description

The MICRF103 is a single chip Transmitter IC for remote wireless applications. The device employs Micrel's latest QwikRadio™ technology. This device is a true "data-in, antenna-out" monolithic device. All antenna tuning is accomplished automatically within the IC which eliminates manual tuning, and reduces production costs. The result is a highly reliable yet extremely low cost solution for high volume wireless applications. Because the MICRF103 is a true single-chip radio transmitter, it is easy to apply, minimizing design and production costs, and improving time to market.

The MICRF103 uses a novel architecture where the external antenna is tuned by the internal UHF synthesizer. This transmitter is designed to comply worldwide UHF unlicensed band international radio regulations. The IC is compatible with virtually all ASK/OOK (Amplitude Shift Keying/On-Off Keyed) UHF receiver types from wide-band super-regenerative radios to narrow-band, high performance super-heterodyne receivers. The transmitter is designed to work with transmitter data rates up to 115k bits per second.

The automatic tuning in conjunction with an external resistor, insures that the transmitter output power stays constant at maximum regulatory transmit power limits for the life of the battery.

When coupled with Micrel's family of QwikRadio™ receivers, the MICRF103 provides the lowest cost and most reliable remote actuator and RF link system available.

Features

- Complete UHF transmitter on a monolithic chip
- Frequency range 800MHz to 1GHz
- Data rates to 115kbps
- Automatic antenna alignment, no manual adjustment
- Low external part count
- Low standby current <1µA

Applications

- Remote keyless entry systems (RKE)
- Remote fan/light control
- Garage door opener transmitters
- Remote sensor data links

Ordering Information

Part Number	Temperature Range	Package
MICRF103BM	–40°C to +85°C	8-Pin SOIC

Typical Application

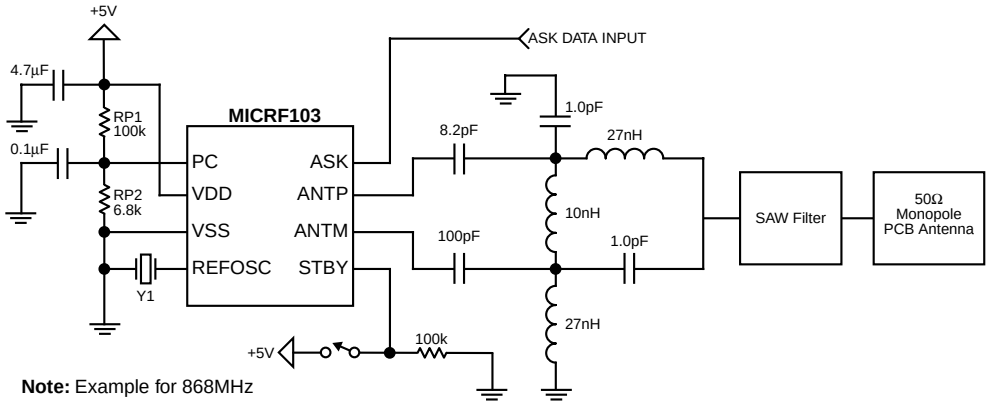

Note: Example for 868MHz

Figure 1

QwikRadio is a trademark of Micrel, Inc. The QwikRadio ICs were developed under a partnership agreement with AIT of Orlando, Florida.

Micrel, Inc. • 1849 Fortune Drive • San Jose, CA 95131 • USA • tel + 1 (408) 944-0800 • fax + 1 (408) 944-0970 • http://www.micrel.com

Pin Configuration

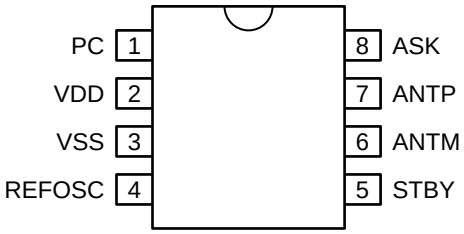

MICRF103BM

Pin Description

Pin Number	Pin Name	Pin Function
1	PC	Power Control Input. The voltage at this pin should be set between 0.1V to 0.4V for normal operation.
2	VDD	Positive power supply input for the IC.
3	VSS	This pin is the ground return for the IC. A power supply bypass capacitor connected from VDD to VSS should have the shortest possible path.
4	REFOSC	This is the timing reference frequency which is the transmit frequency divided by 64. Connect a crystal (mode dependent) between this pin and VSS, or drive the input with an AC coupled 0.5Vpp input clock. See *Reference Oscillator* section in this data sheet under *Electrical Characteristics.*
5	STBY	Input for transmitter stand-by control pin is pulled to VDD for transmit operation and VSS for stand-by mode.
6	ANTM	Negative RF power output to drive one side of the transmit antenna.
7	ANTP	Positive RF power output to drive the other side of the transmit antenna.
8	ASK	Amplitude Shift Key modulation data input pin. For CW operation, connect this pin to VDD.

Absolute Maximum Ratings (Note 1)

Supply Voltage(V_{DD}) ..... +6V
Voltage on I/O Pins ..... V_{SS}–0.3 to V_{DD}+0.3
Storage Temperature Range ..... -65°C to + 150°C
Lead Temperature (soldering, 10 seconds) ..... + 300°C
ESD Rating, **Note 3**

Operating Ratings (Note 2)

Supply Voltage (V_{DD}) ..... 4.75V to 5.5V
Maximum Supply Ripple Voltage 10mV
PC Input Range ..... 0.1V < V_{PC} < 0.4V
Ambient Operating Temperature (T_A) ..... –40°C to +85°C
Programmable Transmitter Frequency Range:
..... 800MHz to 1GHz

Electrical Characteristics

Specifications apply for 4.75V < V_{DD} < 5.5V, V_{PC} = 0.35V, T_A = 25°C, $freq_{REFOSC}$ = 13.5625MHz, STBY = V_{DD}. **Bold** values indicate –40°C ≤ T_A ≤ 85°C unless otherwise noted.

Parameter	Condition	Min	Typ	Max	Units
Power Supply					
Standby Supply Current, I_Q	V_{STBY} < 0.5V		0.10		µA
MARK Supply Current, I_{ON}	@868MHz		19	**26.5**	mA
	@915MHz		20	**27.5**	mA
SPACE Supply Current, I_{OFF}	@868MHz		14	**18**	mA
	@915MHz		15	**21**	mA
MARK/SPACE Ratio	33%@868MHz		16		mA
	33%@915MHz		17		mA
RF Output Section and Modulation Limits:					
Maximum Power Level, P_{OUT}	@868MHz (EIRP)		-3		dBm
	@915MHz (EIRP)		-3		dBm
Output Power Variation	over supply and temperature		±2		dBm
Extinction ratio for ASK		38	45		dBc
Varactor tuning range	**Note 5**	**2.6**	3.0	3.3	pF
Reference Oscillator Section					
Reference Oscillator Input Impedance			300		kΩ
Reference Oscillator Source Current			5.0		µA
Reference Oscillator Input Voltage (peak-to-peak)		0.2		1.0	V_{PP}
Digital / Control Section					
Calibration Time	note 7, ASK=HIGH		20		ms
Power Amplifier Output Hold-off Time from STBY	note 4, STDBY transition from LOW to HIGH crystal, ESR < 20Ω		5		ms
Transmitter Stabilization Time	from external reference (500mVpp)		9		ms
From STBY	crystal, ESR < 20Ω		12		ms
Maximum Data rate - ASK modulation	duty cycle of the modulating signal = 50%	**115**			kbits/s
STBY HIGH V_{IH}	enable voltage	0.8V_{DD}			V
STBY LOW V_{IL}				0.1V_{DD}	
ASK Pin	V_{IH}, input high voltage	0.8V_{DD}			V
	V_{IL}, input low voltage			0.1V_{DD}	V
ASK Input Current	ASK = 0V, 5.0V input current	–10	0.1	10	µA

Note 1. Exceeding the absolute maximum rating may damage the device.

Note 2. The device is not guaranteed to function outside its operating rating.

Note 3. Devices are ESD sensitive. Handling precautions recommended. Human body model, 1.5k in series with 100pF.

Note 4. After the release of the STDBY, the device requires an initialization time to settle the REFOSC and the internal PLL. The first MARK state (ASK HIGH) after exit from STDBY needs to be longer than the initialization time. The subsequent low to high transitions will be treated as data modulation whereby the envelope transition time will apply.

Note 5. The varactor capacitance tuning range indicates the allowable external antenna component variation to maintain tune over normal production tolerances of external components. Guaranteed by design not tested in production.

Note 6. For the ASK modulation scheme, the part will accept ASK (digital ON/OFF) input and will transmit the data with a finite extinction ratio and the pin will set the MARK power level.

Note 7. When the device is first powered up or it loses power momentarily, it goes into the calibration mode to tune up the transmit antenna.

Test Circuit

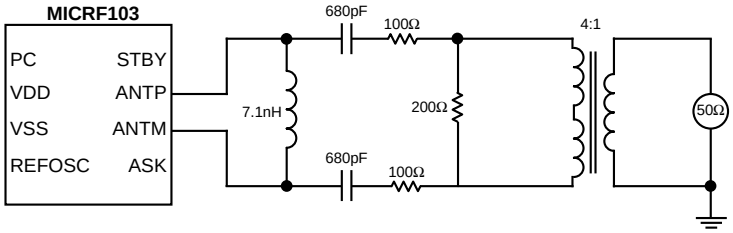

Typical Characteristics

Mark Current vs. PC Voltage

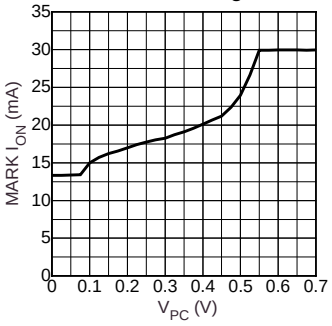

Output Power vs. PC Pin Voltage

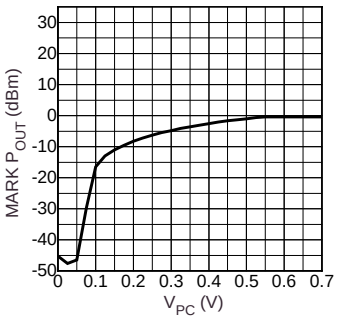

Functional Diagram

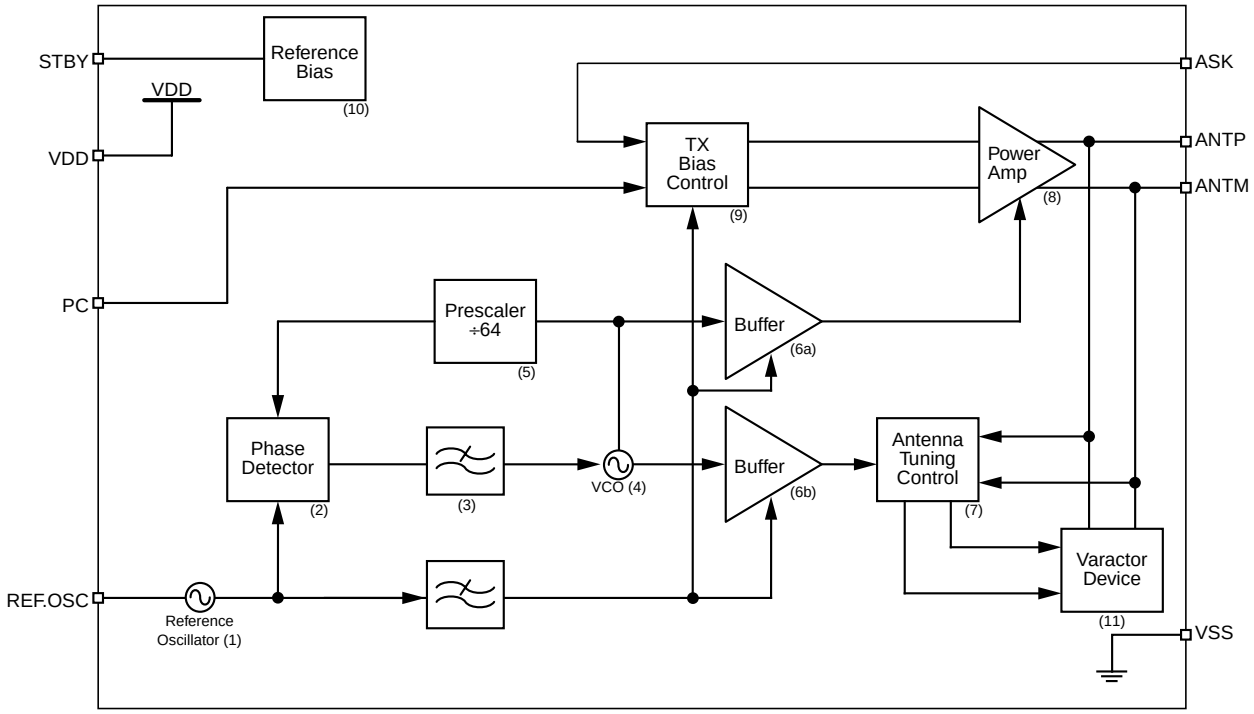

Figure 2. MICRF103 Block Diagram

Functional Description

The block diagram illustrates the basic structure of the MICRF103. Identified in the figure are the principal functional blocks of the IC, namely the (1, 2, 3, 4, 5) UHF synthesizer, (6a/b) Buffer, (7) Antenna tuner, (8) Power amplifier, (9) TX bias control, (10) Reference bias and (11) Process tuner.

The UHF synthesizer generates the carrier frequency with quadrature outputs. The in-phase signal (I) is used to drive the PA and the quadrature signal (Q) is used to compare the antenna signal phase for antenna tuning purpose.

The antenna tuner block senses the phase of the transmit signal at the antenna port and controls the varactor capacitor to tune the antenna.

The power control unit senses the antenna signal and controls the PA bias current to regulate the antenna signal to the transmit power.

The process tune circuit generates process independent bias currents for different blocks.

Included within the IC is a differential varactor that serves as the tuning element to insure that the transmit frequency and antenna are aligned with the receiver over all supply and temperature variations.

Package Information

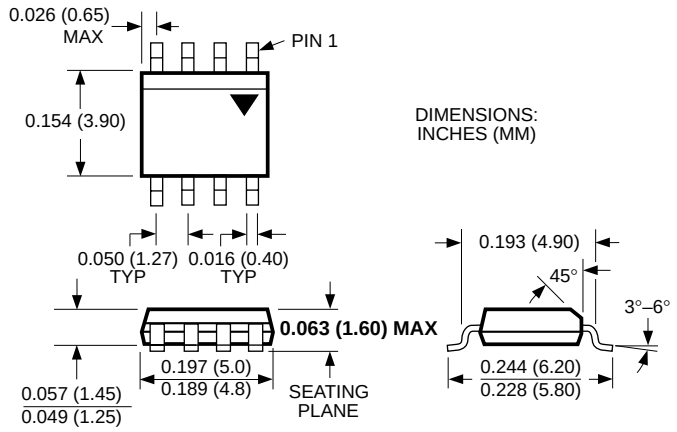

8-Pin SOP (M)

MICREL, INC. 1849 FORTUNE DRIVE SAN JOSE, CA 95131 USA

TEL + 1 (408) 944-0800 FAX + 1 (408) 944-0970 WEB http://www.micrel.com

This information is believed to be accurate and reliable, however no responsibility is assumed by Micrel for its use nor for any infringement of patents or other rights of third parties resulting from its use. No license is granted by implication or otherwise under any patent or patent right of Micrel, Inc.

© 2002 Micrel, Incorporated

О компании

ООО "ТрейдЭлектроникс" - это оперативные поставки широкого спектра электронных компонентов отечественного и импортного производства напрямую от производителей и с крупнейших мировых складов. Реализуемая нашей компанией продукция насчитывает более полумиллиона наименований.

Благодаря этому наша компания предлагает к поставке практически не ограниченный ассортимент компонентов как оптовыми, мелкооптовыми партиями, так и в розницу.

Наличие собственной эффективной системы логистики обеспечивает надежную поставку продукции по конкурентным ценам в точно указанные сроки.

Срок поставки со стоков в **Европе и Америке – от 3 до 14 дней.**

Срок поставки из **Азии – от 10 дней.**

Благодаря развитой сети поставщиков, помогаем в поиске и приобретении экзотичных или снятых с производства компонентов.

Предоставляем спец цены на элементы для создания инженерных сэмплов.

Упорный труд, качественный результат дают нам право быть уверенными в себе и надежными для наших клиентов.

Наша компания это:

- Гарантия качества поставляемой продукции
- Широкий ассортимент
- Минимальные сроки поставок
- Техническая поддержка
- Подбор комплектации
- Индивидуальный подход
- Гибкое ценообразование

Наша организация особенно сильна в поставках модулей, микросхем, пассивных компонентов, ксайленсах (XC), EPF, EPM и силовой электроники.

Большой выбор предлагаемой продукции, различные виды оплаты и доставки, позволят Вам сэкономить время и получить максимум выгоды от сотрудничества с нами!

Trade Electronics.ru

гарантия бесперебойности производства и качества выпускаемой продукции

Перечень производителей, продукцию которых мы поставляем на российский рынок

AMD
ANALOG DEVICES
BOURNS
Coilcraft
élantec Semiconductor, Inc.
HARRIS
Infineon
JRC
MICREL
MOTOROLA
nichicon
PHILIPS
ROHM
SGS-THOMSON
Sipex
TAIYO YUDEN
TOKO
ZILOG
Winbond
Allegro
ATMEL
BURR - BROWN
EXAR
HITACHI
intel
Lattice
muRata
OKI
QUALCOMM
SAMSUNG
SHARP
SONY
TDK
TOSHIBA
KYOCERA
ALTERA
AVX
CITILYST
CYPRESS
FAIRCHILD SEMICONDUCTOR
HOLTEK
International IOR Rectifier
LINEAR TECHNOLOGY
MITSUBISHI
National Semiconductor
ON Semiconductor
REALTEK
SANYO
SHINDENGEN
SGS
TECCOR
TUNDRA
XILINX
Amphenol
Bay Linear
CIRRUS LOGIC
DALLAS
FUJITSU
IDT
intersil
MAXIM
molex
NEC
Panasonic
RENESAS
SII
SIEMENS
ST
Texas Instruments
VISHAY
ZETEX SEMICONDUCTORS

Trade Electronics.ru

гарантия бесперебойности производства и качества выпускаемой продукции

С удовольствием будем прорабатывать для Вас поставки всех необходимых компонентов по текущим запросам для скорейшего выявления групп элементов, по которым сотрудничество именно с нашей компанией будет для Вас максимально выгодным!

С уважением,

Менеджер отдела продаж ООО

«Трейд Электроникс»

Шишлаков Евгений

8 (495)668-30-28 доб 169

manager28@tradeelectronics.ru

http://www.tradeelectronics.ru/