- **Meets or Exceeds TIA/EIA-232-F and ITU Recommendation V.28**
- **Operates From a Single 5-V Power Supply With 1.0-μF Charge-Pump Capacitors**
- **Operates Up To 120 kbit/s**
- **Two Drivers and Two Receivers**
- **±30-V Input Levels**
- **Low Supply Current . . . 8 mA Typical**
- **ESD Protection Exceeds JESD 22**
  - **2000-V Human-Body Model (A114-A)**
- **Upgrade With Improved ESD (15-kV HBM) and 0.1-μF Charge-Pump Capacitors is Available With the MAX202**
- **Applications**
  - **TIA/EIA-232-F, Battery-Powered Systems, Terminals, Modems, and Computers**

MAX232 . . . D, DW, N, OR NS PACKAGE
MAX232I . . . D, DW, OR N PACKAGE
(TOP VIEW)

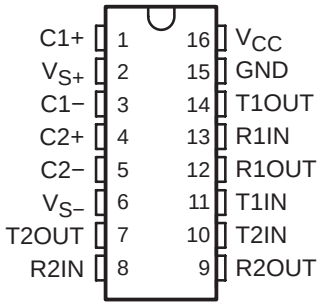

description/ordering information

The MAX232 is a dual driver/receiver that includes a capacitive voltage generator to supply TIA/EIA-232-F voltage levels from a single 5-V supply. Each receiver converts TIA/EIA-232-F inputs to 5-V TTL/CMOS levels. These receivers have a typical threshold of 1.3 V, a typical hysteresis of 0.5 V, and can accept ±30-V inputs. Each driver converts TTL/CMOS input levels into TIA/EIA-232-F levels. The driver, receiver, and voltage-generator functions are available as cells in the Texas Instruments LinASIC™ library.

ORDERING INFORMATION

T_A	PACKAGE†		ORDERABLE PART NUMBER	TOP-SIDE MARKING
0°C to 70°C	PDIP (N)	Tube of 25	MAX232N	MAX232N
	SOIC (D)	Tube of 40	MAX232D	MAX232
		Reel of 2500	MAX232DR	
	SOIC (DW)	Tube of 40	MAX232DW	MAX232
		Reel of 2000	MAX232DWR	
	SOP (NS)	Reel of 2000	MAX232NSR	MAX232
−40°C to 85°C	PDIP (N)	Tube of 25	MAX232IN	MAX232IN
	SOIC (D)	Tube of 40	MAX232ID	MAX232I
		Reel of 2500	MAX232IDR	
	SOIC (DW)	Tube of 40	MAX232IDW	MAX232I
		Reel of 2000	MAX232IDWR	

† Package drawings, standard packing quantities, thermal data, symbolization, and PCB design guidelines are available at www.ti.com/sc/package.

Please be aware that an important notice concerning availability, standard warranty, and use in critical applications of Texas Instruments semiconductor products and disclaimers thereto appears at the end of this data sheet.

LinASIC is a trademark of Texas Instruments.

PRODUCTION DATA information is current as of publication date. Products conform to specifications per the terms of Texas Instruments standard warranty. Production processing does not necessarily include testing of all parameters.

Copyright © 2004, Texas Instruments Incorporated

Function Tables

EACH DRIVER

INPUT TIN	OUTPUT TOUT
L	H
H	L

H = high level, L = low level

EACH RECEIVER

INPUT RIN	OUTPUT ROUT
L	H
H	L

H = high level, L = low level

logic diagram (positive logic)

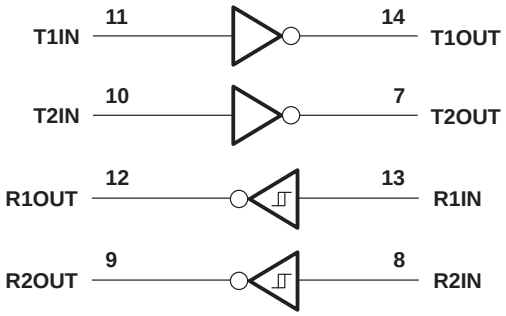

absolute maximum ratings over operating free-air temperature range (unless otherwise noted)†

Input supply voltage range, V_{CC} (see Note 1) . . . . . −0.3 V to 6 V
Positive output supply voltage range, V_{S+} . . . . . V_{CC} − 0.3 V to 15 V
Negative output supply voltage range, V_{S-} . . . . . −0.3 V to −15 V
Input voltage range, V_I: Driver . . . . . −0.3 V to V_{CC} + 0.3 V
Receiver . . . . . ±30 V
Output voltage range, V_O: T1OUT, T2OUT . . . . . V_{S-} − 0.3 V to V_{S+} + 0.3 V
R1OUT, R2OUT . . . . . −0.3 V to V_{CC} + 0.3 V
Short-circuit duration: T1OUT, T2OUT . . . . . Unlimited
Package thermal impedance, θ_{JA} (see Notes 2 and 3): D package . . . . . 73°C/W
DW package . . . . . 57°C/W
N package . . . . . 67°C/W
NS package . . . . . 64°C/W
Operating virtual junction temperature, T_J . . . . . 150°C
Storage temperature range, T_{stg} . . . . . −65°C to 150°C

† Stresses beyond those listed under “absolute maximum ratings” may cause permanent damage to the device. These are stress ratings only, and functional operation of the device at these or any other conditions beyond those indicated under “recommended operating conditions” is not implied. Exposure to absolute-maximum-rated conditions for extended periods may affect device reliability.

NOTES: 1. All voltages are with respect to network GND.
2. Maximum power dissipation is a function of T_J(max), θ_{JA}, and T_A. The maximum allowable power dissipation at any allowable ambient temperature is $P_D = (T_J(max) - T_A)/\theta_{JA}$. Operating at the absolute maximum T_J of 150°C can affect reliability.
3. The package thermal impedance is calculated in accordance with JESD 51-7.

recommended operating conditions

			MIN	NOM	MAX	UNIT
V_{CC}	Supply voltage		4.5	5	5.5	V
V_{IH}	High-level input voltage (T1IN,T2IN)		2			V
V_{IL}	Low-level input voltage (T1IN, T2IN)				0.8	V
R1IN, R2IN	Receiver input voltage				±30	V
T_A	Operating free-air temperature	MAX232	0		70	°C
		MAX232I	−40		85	

electrical characteristics over recommended ranges of supply voltage and operating free-air temperature (unless otherwise noted) (see Note 4 and Figure 4)

PARAMETER		TEST CONDITIONS		MIN	TYP‡	MAX	UNIT
I_{CC}	Supply current	V_{CC} = 5.5 V, T_A = 25°C	All outputs open,		8	10	mA

‡ All typical values are at V_{CC} = 5 V and T_A = 25°C.

NOTE 4: Test conditions are C1−C4 = 1 μF at V_{CC} = 5 V ± 0.5 V.

DRIVER SECTION

electrical characteristics over recommended ranges of supply voltage and operating free-air temperature range (see Note 4)

PARAMETER			TEST CONDITIONS	MIN	TYP†	MAX	UNIT
V_{OH}	High-level output voltage	T1OUT, T2OUT	R_L = 3 kΩ to GND	5	7		V
V_{OL}	Low-level output voltage‡	T1OUT, T2OUT	R_L = 3 kΩ to GND		−7	−5	V
r_o	Output resistance	T1OUT, T2OUT	$V_{S+} = V_{S-} = 0$, $V_O = \pm 2$ V	300			Ω
I_{OS}§	Short-circuit output current	T1OUT, T2OUT	V_{CC} = 5.5 V, V_O = 0		±10		mA
I_{IS}	Short-circuit input current	T1IN, T2IN	V_I = 0			200	µA

† All typical values are at V_{CC} = 5 V, T_A = 25°C.
‡ The algebraic convention, in which the least-positive (most negative) value is designated minimum, is used in this data sheet for logic voltage levels only.
§ Not more than one output should be shorted at a time.
NOTE 4: Test conditions are C1−C4 = 1 µF at V_{CC} = 5 V ± 0.5 V.

switching characteristics, V_{CC} = 5 V, T_A = 25°C (see Note 4)

PARAMETER		TEST CONDITIONS	MIN	TYP	MAX	UNIT
SR	Driver slew rate	R_L = 3 kΩ to 7 kΩ, See Figure 2			30	V/µs
SR(t)	Driver transition region slew rate	See Figure 3		3		V/µs
	Data rate	One TOUT switching		120		kbit/s

NOTE 4: Test conditions are C1−C4 = 1 µF at V_{CC} = 5 V ± 0.5 V.

RECEIVER SECTION

electrical characteristics over recommended ranges of supply voltage and operating free-air temperature range (see Note 4)

PARAMETER			TEST CONDITIONS	MIN	TYP†	MAX	UNIT
V_{OH}	High-level output voltage	R1OUT, R2OUT	I_{OH} = −1 mA	3.5			V
V_{OL}	Low-level output voltage‡	R1OUT, R2OUT	I_{OL} = 3.2 mA			0.4	V
V_{IT+}	Receiver positive-going input threshold voltage	R1IN, R2IN	V_{CC} = 5 V, T_A = 25°C		1.7	2.4	V
V_{IT-}	Receiver negative-going input threshold voltage	R1IN, R2IN	V_{CC} = 5 V, T_A = 25°C	0.8	1.2		V
V_{hys}	Input hysteresis voltage	R1IN, R2IN	V_{CC} = 5 V	0.2	0.5	1	V
r_i	Receiver input resistance	R1IN, R2IN	V_{CC} = 5, T_A = 25°C	3	5	7	kΩ

† All typical values are at V_{CC} = 5 V, T_A = 25°C.
‡ The algebraic convention, in which the least-positive (most negative) value is designated minimum, is used in this data sheet for logic voltage levels only.
NOTE 4: Test conditions are C1−C4 = 1 µF at V_{CC} = 5 V ± 0.5 V.

switching characteristics, V_{CC} = 5 V, T_A = 25°C (see Note 4 and Figure 1)

PARAMETER		TYP	UNIT
$t_{PLH(R)}$	Receiver propagation delay time, low- to high-level output	500	ns
$t_{PHL(R)}$	Receiver propagation delay time, high- to low-level output	500	ns

NOTE 4: Test conditions are C1−C4 = 1 µF at V_{CC} = 5 V ± 0.5 V.

PARAMETER MEASUREMENT INFORMATION

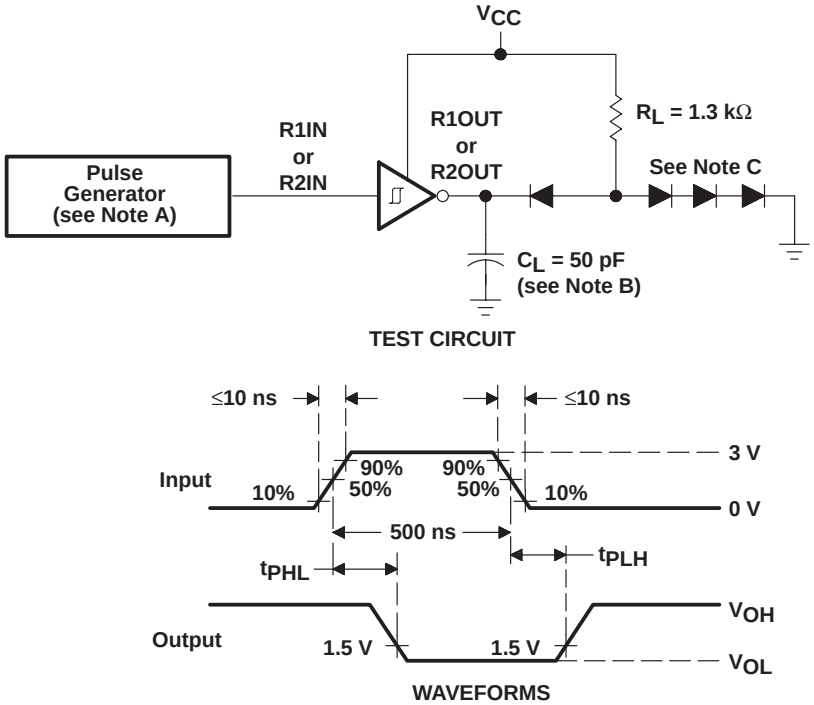

NOTES: A. The pulse generator has the following characteristics: Z_O = 50 Ω, duty cycle ≤ 50%.
B. C_L includes probe and jig capacitance.
C. All diodes are 1N3064 or equivalent.

Figure 1. Receiver Test Circuit and Waveforms for t_{PHL} and t_{PLH} Measurements

PARAMETER MEASUREMENT INFORMATION

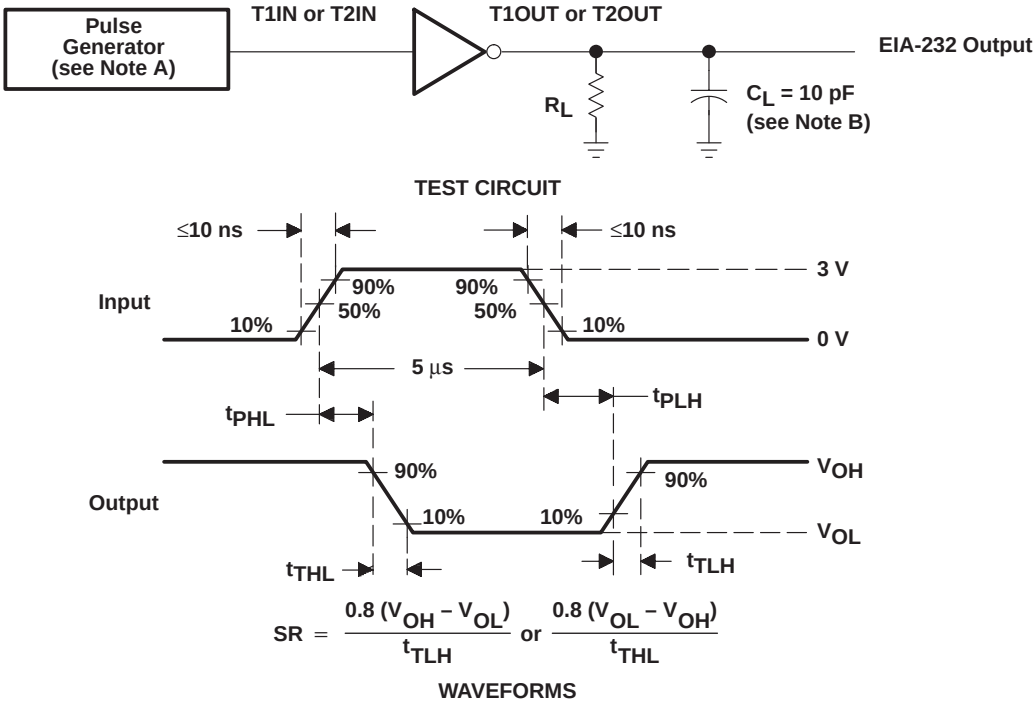

NOTES: A. The pulse generator has the following characteristics: Z_O = 50 Ω, duty cycle ≤ 50%.
B. C_L includes probe and jig capacitance.

Figure 2. Driver Test Circuit and Waveforms for t_{PHL} and t_{PLH} Measurements (5-µs Input)

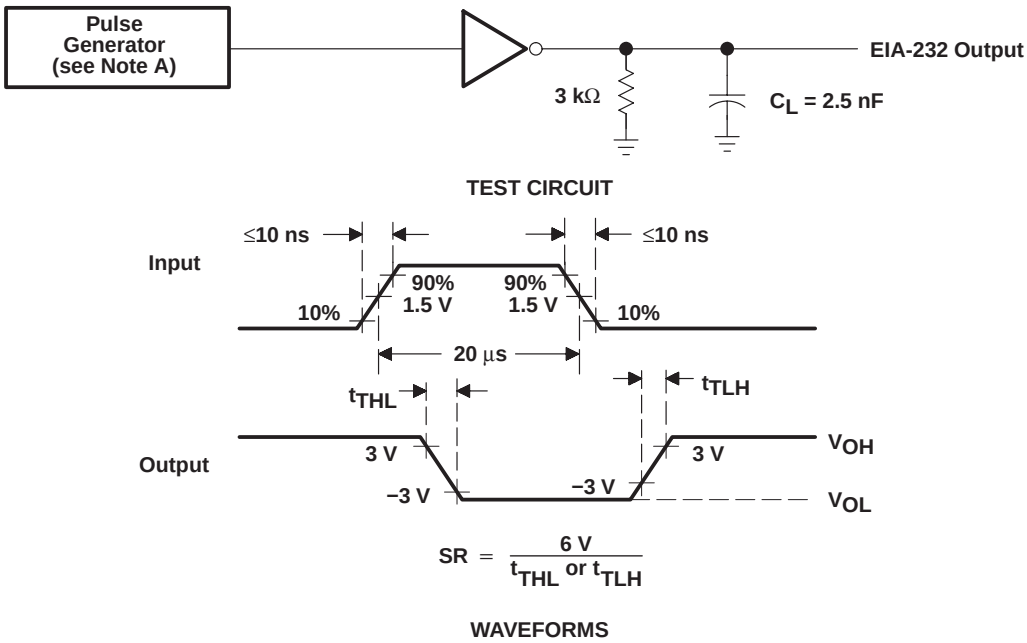

NOTE A: The pulse generator has the following characteristics: Z_O = 50 Ω, duty cycle ≤ 50%.

Figure 3. Test Circuit and Waveforms for t_{THL} and t_{TLH} Measurements (20-µs Input)

APPLICATION INFORMATION

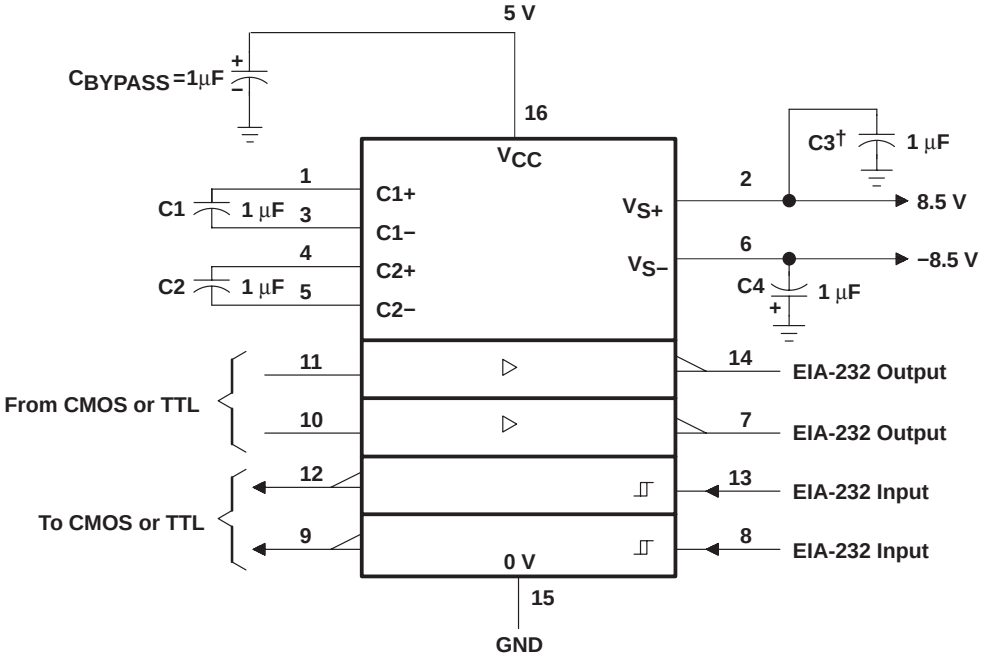

† C3 can be connected to V_{CC} or GND.

NOTES: A. Resistor values shown are nominal.

B. Nonpolarized ceramic capacitors are acceptable. If polarized tantalum or electrolytic capacitors are used, they should be connected as shown. In addition to the 1-µF capacitors shown, the MAX202 can operate with 0.1-µF capacitors.

Figure 4. Typical Operating Circuit

PACKAGING INFORMATION

Orderable Device	Status (1)	Package Type	Package Drawing	Pins	Package Qty	Eco Plan (2)	Lead/Ball Finish	MSL Peak Temp (3)	Op Temp (°C)	Top-Side Markings (4)	Samples
MAX232D	ACTIVE	SOIC	D	16	40	Green (RoHS & no Sb/Br)	CU NIPDAU	Level-1-260C-UNLIM	0 to 70	MAX232	Samples
MAX232DE4	ACTIVE	SOIC	D	16	40	Green (RoHS & no Sb/Br)	CU NIPDAU	Level-1-260C-UNLIM	0 to 70	MAX232	Samples
MAX232DG4	ACTIVE	SOIC	D	16	40	Green (RoHS & no Sb/Br)	CU NIPDAU	Level-1-260C-UNLIM	0 to 70	MAX232	Samples
MAX232DR	ACTIVE	SOIC	D	16	2500	Green (RoHS & no Sb/Br)	CU NIPDAU	Level-1-260C-UNLIM	0 to 70	MAX232	Samples
MAX232DRE4	ACTIVE	SOIC	D	16	2500	Green (RoHS & no Sb/Br)	CU NIPDAU	Level-1-260C-UNLIM	0 to 70	MAX232	Samples
MAX232DRG4	ACTIVE	SOIC	D	16	2500	Green (RoHS & no Sb/Br)	CU NIPDAU	Level-1-260C-UNLIM	0 to 70	MAX232	Samples
MAX232DW	ACTIVE	SOIC	DW	16	40	Green (RoHS & no Sb/Br)	CU NIPDAU	Level-1-260C-UNLIM	0 to 70	MAX232	Samples
MAX232DWE4	ACTIVE	SOIC	DW	16	40	Green (RoHS & no Sb/Br)	CU NIPDAU	Level-1-260C-UNLIM	0 to 70	MAX232	Samples
MAX232DWG4	ACTIVE	SOIC	DW	16	40	Green (RoHS & no Sb/Br)	CU NIPDAU	Level-1-260C-UNLIM	0 to 70	MAX232	Samples
MAX232DWR	ACTIVE	SOIC	DW	16	2000	Green (RoHS & no Sb/Br)	CU NIPDAU	Level-1-260C-UNLIM	0 to 70	MAX232	Samples
MAX232DWRE4	ACTIVE	SOIC	DW	16	2000	Green (RoHS & no Sb/Br)	CU NIPDAU	Level-1-260C-UNLIM	0 to 70	MAX232	Samples
MAX232DWRG4	ACTIVE	SOIC	DW	16	2000	Green (RoHS & no Sb/Br)	CU NIPDAU	Level-1-260C-UNLIM	0 to 70	MAX232	Samples
MAX232ID	ACTIVE	SOIC	D	16	40	Green (RoHS & no Sb/Br)	CU NIPDAU	Level-1-260C-UNLIM	-40 to 85	MAX232I	Samples
MAX232IDE4	ACTIVE	SOIC	D	16	40	Green (RoHS & no Sb/Br)	CU NIPDAU	Level-1-260C-UNLIM	-40 to 85	MAX232I	Samples
MAX232IDG4	ACTIVE	SOIC	D	16	40	Green (RoHS & no Sb/Br)	CU NIPDAU	Level-1-260C-UNLIM	-40 to 85	MAX232I	Samples
MAX232IDR	ACTIVE	SOIC	D	16	2500	Green (RoHS & no Sb/Br)	CU NIPDAU	Level-1-260C-UNLIM	-40 to 85	MAX232I	Samples
MAX232IDRE4	ACTIVE	SOIC	D	16	2500	Green (RoHS & no Sb/Br)	CU NIPDAU	Level-1-260C-UNLIM	-40 to 85	MAX232I	Samples

Orderable Device	Status (1)	Package Type	Package Drawing	Pins	Package Qty	Eco Plan (2)	Lead/Ball Finish	MSL Peak Temp (3)	Op Temp (°C)	Top-Side Markings (4)	Samples
MAX232IDRG4	ACTIVE	SOIC	D	16	2500	Green (RoHS & no Sb/Br)	CU NIPDAU	Level-1-260C-UNLIM	-40 to 85	MAX232I	Samples
MAX232IDW	ACTIVE	SOIC	DW	16	40	Green (RoHS & no Sb/Br)	CU NIPDAU	Level-1-260C-UNLIM	-40 to 85	MAX232I	Samples
MAX232IDWE4	ACTIVE	SOIC	DW	16	40	Green (RoHS & no Sb/Br)	CU NIPDAU	Level-1-260C-UNLIM	-40 to 85	MAX232I	Samples
MAX232IDWG4	ACTIVE	SOIC	DW	16	40	Green (RoHS & no Sb/Br)	CU NIPDAU	Level-1-260C-UNLIM	-40 to 85	MAX232I	Samples
MAX232IDWR	ACTIVE	SOIC	DW	16	2000	Green (RoHS & no Sb/Br)	CU NIPDAU	Level-1-260C-UNLIM	-40 to 85	MAX232I	Samples
MAX232IDWRE4	ACTIVE	SOIC	DW	16	2000	Green (RoHS & no Sb/Br)	CU NIPDAU	Level-1-260C-UNLIM	-40 to 85	MAX232I	Samples
MAX232IDWRG4	ACTIVE	SOIC	DW	16	2000	Green (RoHS & no Sb/Br)	CU NIPDAU	Level-1-260C-UNLIM	-40 to 85	MAX232I	Samples
MAX232IN	ACTIVE	PDIP	N	16	25	Pb-Free (RoHS)	CU NIPDAU	N / A for Pkg Type	-40 to 85	MAX232IN	Samples
MAX232INE4	ACTIVE	PDIP	N	16	25	Pb-Free (RoHS)	CU NIPDAU	N / A for Pkg Type	-40 to 85	MAX232IN	Samples
MAX232N	ACTIVE	PDIP	N	16	25	Pb-Free (RoHS)	CU NIPDAU	N / A for Pkg Type	0 to 70	MAX232N	Samples
MAX232NE4	ACTIVE	PDIP	N	16	25	Pb-Free (RoHS)	CU NIPDAU	N / A for Pkg Type	0 to 70	MAX232N	Samples
MAX232NSR	ACTIVE	SO	NS	16	2000	Green (RoHS & no Sb/Br)	CU NIPDAU	Level-1-260C-UNLIM	0 to 70	MAX232	Samples
MAX232NSRE4	ACTIVE	SO	NS	16	2000	Green (RoHS & no Sb/Br)	CU NIPDAU	Level-1-260C-UNLIM	0 to 70	MAX232	Samples
MAX232NSRG4	ACTIVE	SO	NS	16	2000	Green (RoHS & no Sb/Br)	CU NIPDAU	Level-1-260C-UNLIM	0 to 70	MAX232	Samples

(1) The marketing status values are defined as follows:
ACTIVE: Product device recommended for new designs.
LIFEBUY: TI has announced that the device will be discontinued, and a lifetime-buy period is in effect.
NRND: Not recommended for new designs. Device is in production to support existing customers, but TI does not recommend using this part in a new design.
PREVIEW: Device has been announced but is not in production. Samples may or may not be available.
OBSOLETE: TI has discontinued the production of the device.

(2) Eco Plan - The planned eco-friendly classification: Pb-Free (RoHS), Pb-Free (RoHS Exempt), or Green (RoHS & no Sb/Br) - please check http://www.ti.com/productcontent for the latest availability information and additional product content details.
TBD: The Pb-Free/Green conversion plan has not been defined.
Pb-Free (RoHS): TI's terms "Lead-Free" or "Pb-Free" mean semiconductor products that are compatible with the current RoHS requirements for all 6 substances, including the requirement that lead not exceed 0.1% by weight in homogeneous materials. Where designed to be soldered at high temperatures, TI Pb-Free products are suitable for use in specified lead-free processes.
Pb-Free (RoHS Exempt): This component has a RoHS exemption for either 1) lead-based flip-chip solder bumps used between the die and package, or 2) lead-based die adhesive used between the die and leadframe. The component is otherwise considered Pb-Free (RoHS compatible) as defined above.
Green (RoHS & no Sb/Br): TI defines "Green" to mean Pb-Free (RoHS compatible), and free of Bromine (Br) and Antimony (Sb) based flame retardants (Br or Sb do not exceed 0.1% by weight in homogeneous material)

(3) MSL, Peak Temp. -- The Moisture Sensitivity Level rating according to the JEDEC industry standard classifications, and peak solder temperature.

(4) Only one of markings shown within the brackets will appear on the physical device.

Important Information and Disclaimer: The information provided on this page represents TI's knowledge and belief as of the date that it is provided. TI bases its knowledge and belief on information provided by third parties, and makes no representation or warranty as to the accuracy of such information. Efforts are underway to better integrate information from third parties. TI has taken and continues to take reasonable steps to provide representative and accurate information but may not have conducted destructive testing or chemical analysis on incoming materials and chemicals. TI and TI suppliers consider certain information to be proprietary, and thus CAS numbers and other limited information may not be available for release.

In no event shall TI's liability arising out of such information exceed the total purchase price of the TI part(s) at issue in this document sold by TI to Customer on an annual basis.

TAPE AND REEL INFORMATION

REEL DIMENSIONS

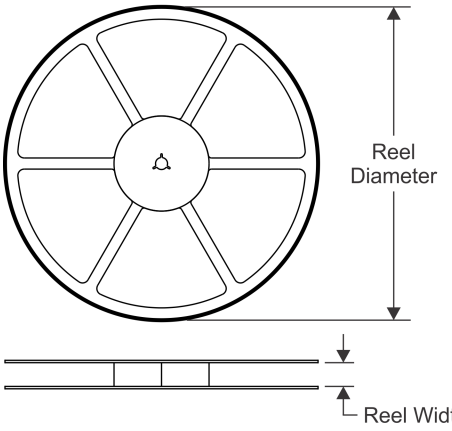

TAPE DIMENSIONS

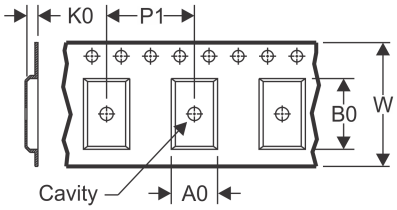

A0	Dimension designed to accommodate the component width
B0	Dimension designed to accommodate the component length
K0	Dimension designed to accommodate the component thickness
W	Overall width of the carrier tape
P1	Pitch between successive cavity centers

QUADRANT ASSIGNMENTS FOR PIN 1 ORIENTATION IN TAPE

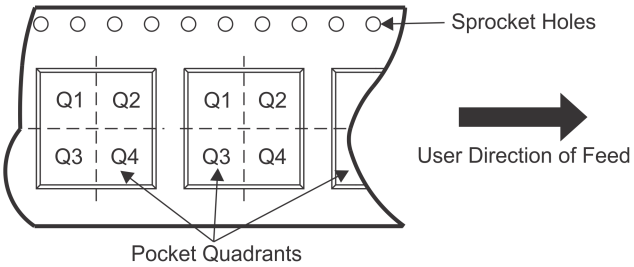

*All dimensions are nominal

Device	Package Type	Package Drawing	Pins	SPQ	Reel Diameter (mm)	Reel Width W1 (mm)	A0 (mm)	B0 (mm)	K0 (mm)	P1 (mm)	W (mm)	Pin1 Quadrant
MAX232DR	SOIC	D	16	2500	330.0	16.4	6.5	10.3	2.1	8.0	16.0	Q1
MAX232DR	SOIC	D	16	2500	330.0	16.4	6.5	10.3	2.1	8.0	16.0	Q1
MAX232DRG4	SOIC	D	16	2500	330.0	16.4	6.5	10.3	2.1	8.0	16.0	Q1
MAX232DRG4	SOIC	D	16	2500	330.0	16.4	6.5	10.3	2.1	8.0	16.0	Q1
MAX232DWR	SOIC	DW	16	2000	330.0	16.4	10.75	10.7	2.7	12.0	16.0	Q1
MAX232DWRG4	SOIC	DW	16	2000	330.0	16.4	10.75	10.7	2.7	12.0	16.0	Q1
MAX232IDR	SOIC	D	16	2500	330.0	16.4	6.5	10.3	2.1	8.0	16.0	Q1
MAX232IDWR	SOIC	DW	16	2000	330.0	16.4	10.75	10.7	2.7	12.0	16.0	Q1
MAX232IDWRG4	SOIC	DW	16	2000	330.0	16.4	10.75	10.7	2.7	12.0	16.0	Q1
MAX232NSR	SO	NS	16	2000	330.0	16.4	8.2	10.5	2.5	12.0	16.0	Q1

TAPE AND REEL BOX DIMENSIONS

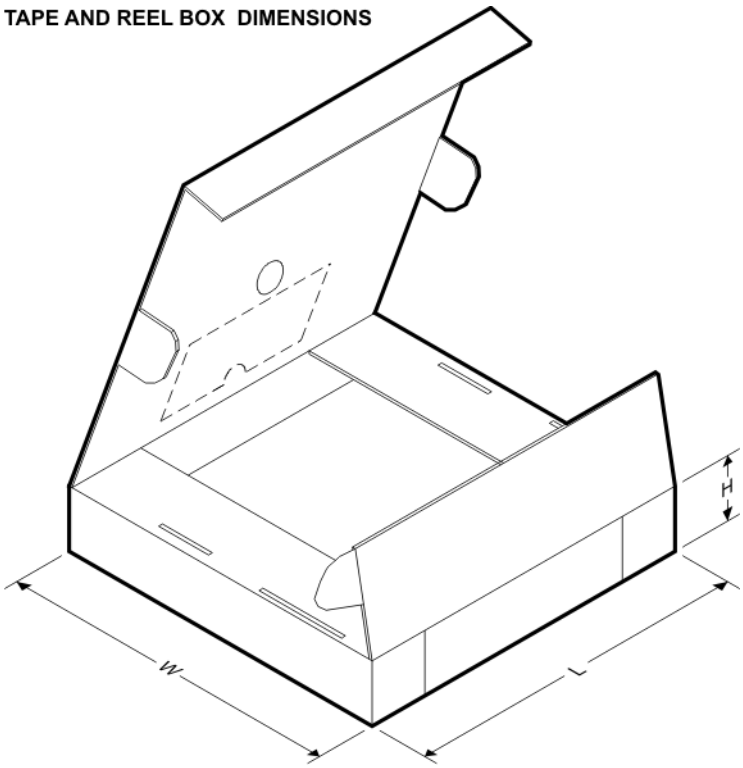

*All dimensions are nominal

Device	Package Type	Package Drawing	Pins	SPQ	Length (mm)	Width (mm)	Height (mm)
MAX232DR	SOIC	D	16	2500	367.0	367.0	38.0
MAX232DR	SOIC	D	16	2500	333.2	345.9	28.6
MAX232DRG4	SOIC	D	16	2500	333.2	345.9	28.6
MAX232DRG4	SOIC	D	16	2500	367.0	367.0	38.0
MAX232DWR	SOIC	DW	16	2000	366.0	364.0	50.0
MAX232DWRG4	SOIC	DW	16	2000	367.0	367.0	38.0
MAX232IDR	SOIC	D	16	2500	333.2	345.9	28.6
MAX232IDWR	SOIC	DW	16	2000	366.0	364.0	50.0
MAX232IDWRG4	SOIC	DW	16	2000	367.0	367.0	38.0
MAX232NSR	SO	NS	16	2000	367.0	367.0	38.0

N (R–PDIP–T**) PLASTIC DUAL–IN–LINE PACKAGE

16 PINS SHOWN

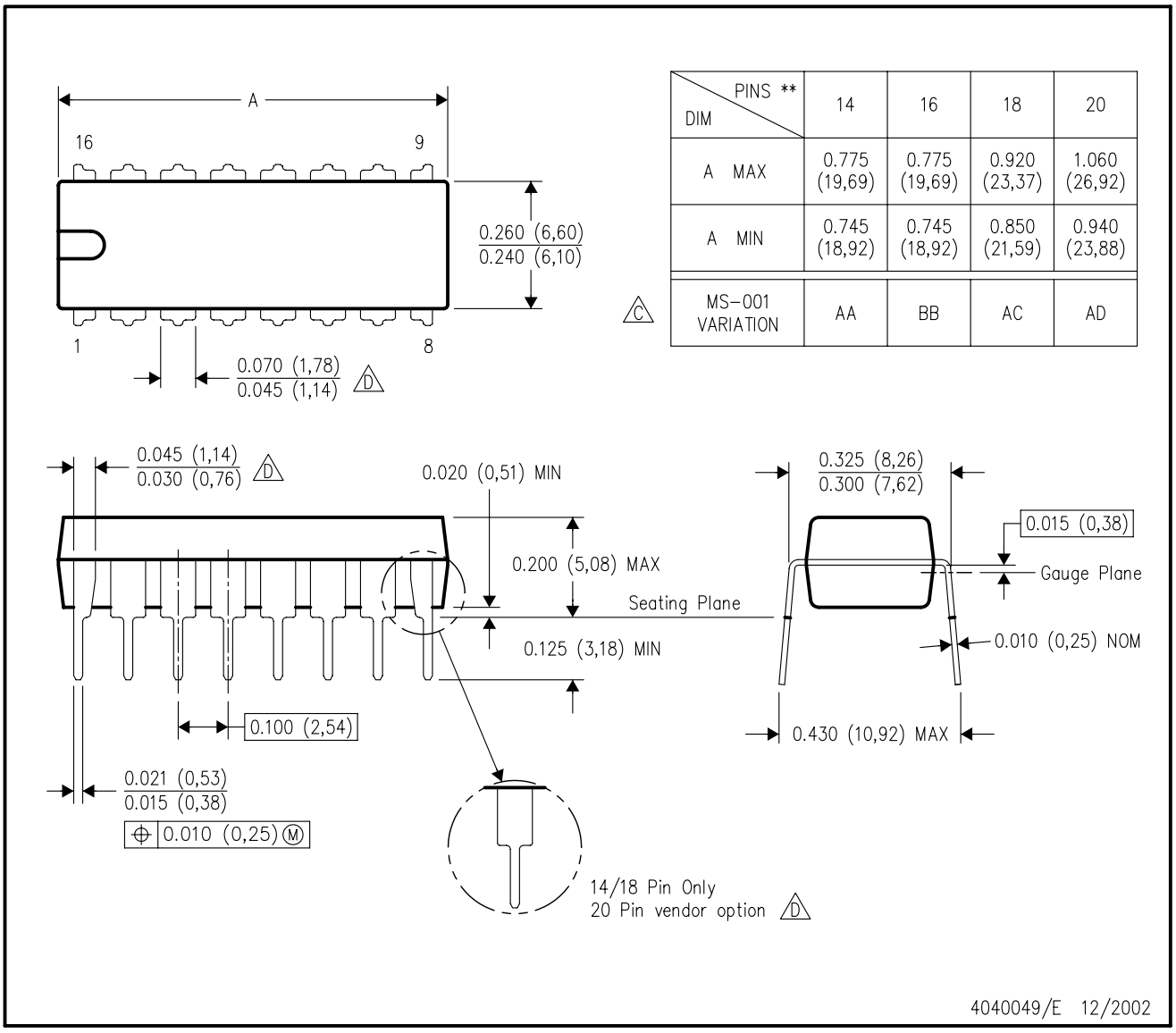

DIM \ PINS **	14	16	18	20
A MAX	0.775 (19,69)	0.775 (19,69)	0.920 (23,37)	1.060 (26,92)
A MIN	0.745 (18,92)	0.745 (18,92)	0.850 (21,59)	0.940 (23,88)
MS–001 VARIATION (C)	AA	BB	AC	AD

NOTES:
A. All linear dimensions are in inches (millimeters).
B. This drawing is subject to change without notice.
C. Falls within JEDEC MS–001, except 18 and 20 pin minimum body length (Dim A).
D. The 20 pin end lead shoulder width is a vendor option, either half or full width.

D (R–PDSO–G16) PLASTIC SMALL OUTLINE

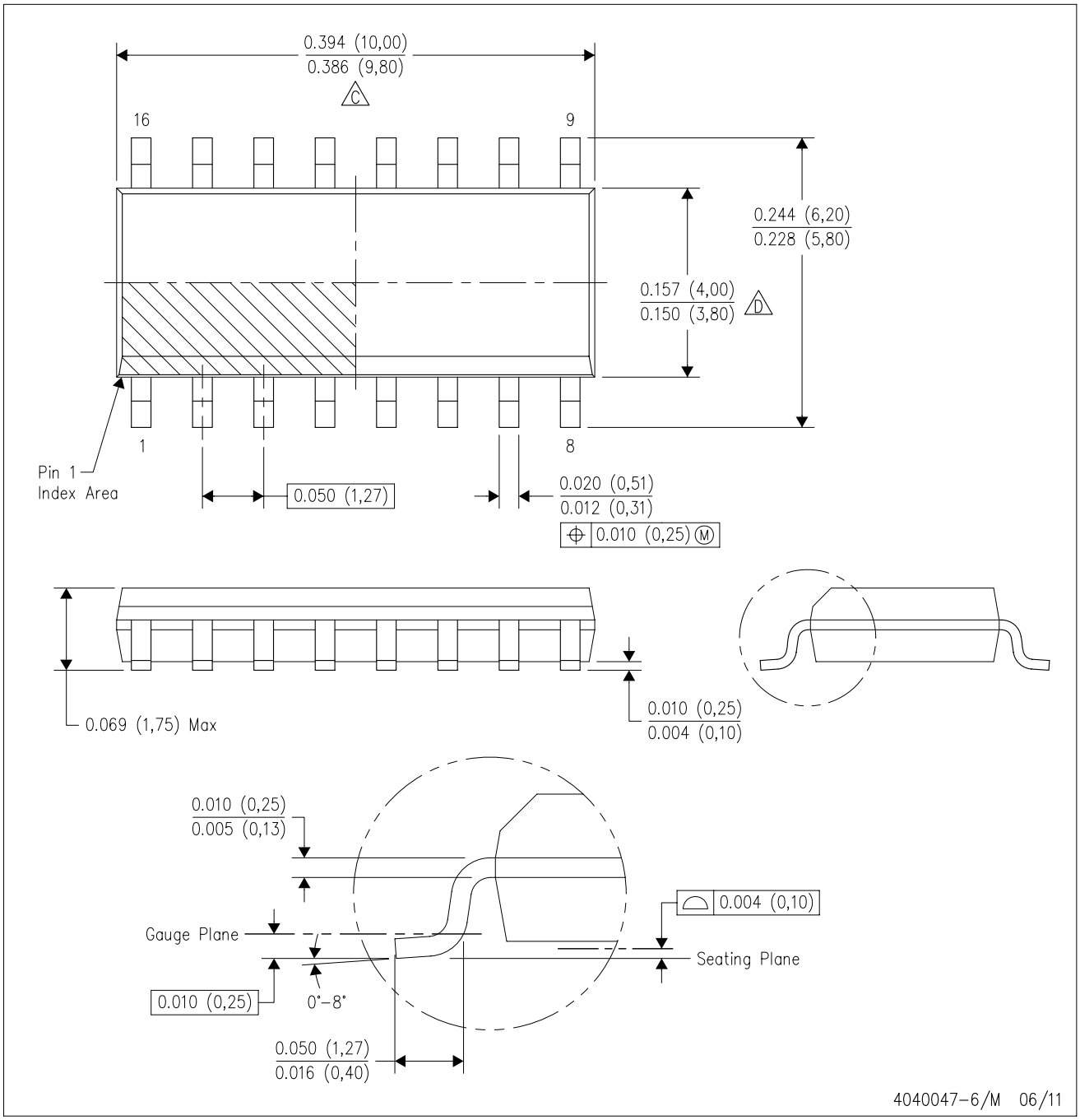

NOTES:
A. All linear dimensions are in inches (millimeters).
B. This drawing is subject to change without notice.
C. Body length does not include mold flash, protrusions, or gate burrs. Mold flash, protrusions, or gate burrs shall not exceed 0.006 (0,15) each side.
D. Body width does not include interlead flash. Interlead flash shall not exceed 0.017 (0,43) each side.
E. Reference JEDEC MS–012 variation AC.

D (R–PDSO–G16) PLASTIC SMALL OUTLINE

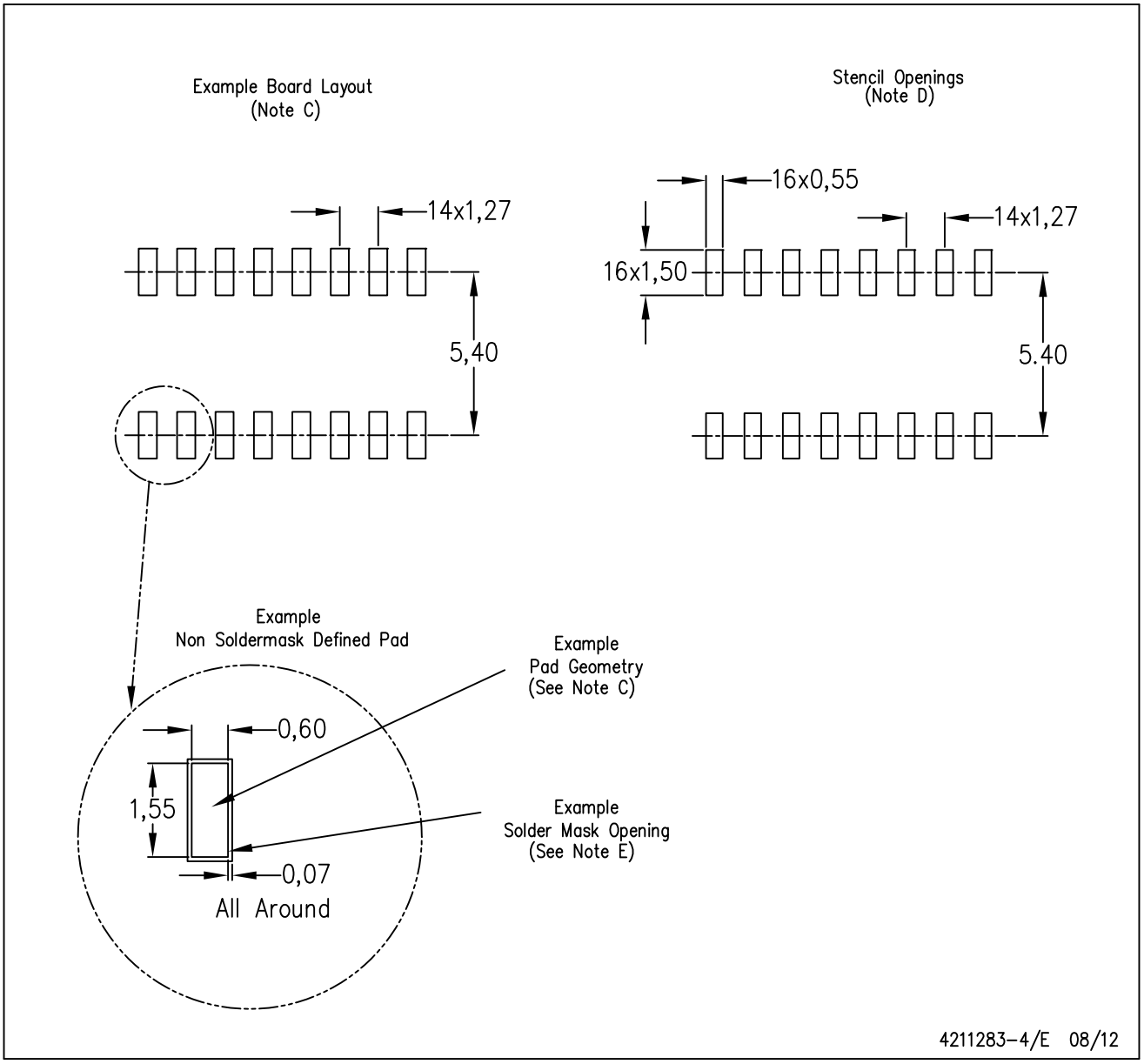

NOTES:
A. All linear dimensions are in millimeters.
B. This drawing is subject to change without notice.
C. Publication IPC–7351 is recommended for alternate designs.
D. Laser cutting apertures with trapezoidal walls and also rounding corners will offer better paste release. Customers should contact their board assembly site for stencil design recommendations. Refer to IPC–7525 for other stencil recommendations.
E. Customers should contact their board fabrication site for solder mask tolerances between and around signal pads.

DW (R–PDSO–G16) PLASTIC SMALL OUTLINE

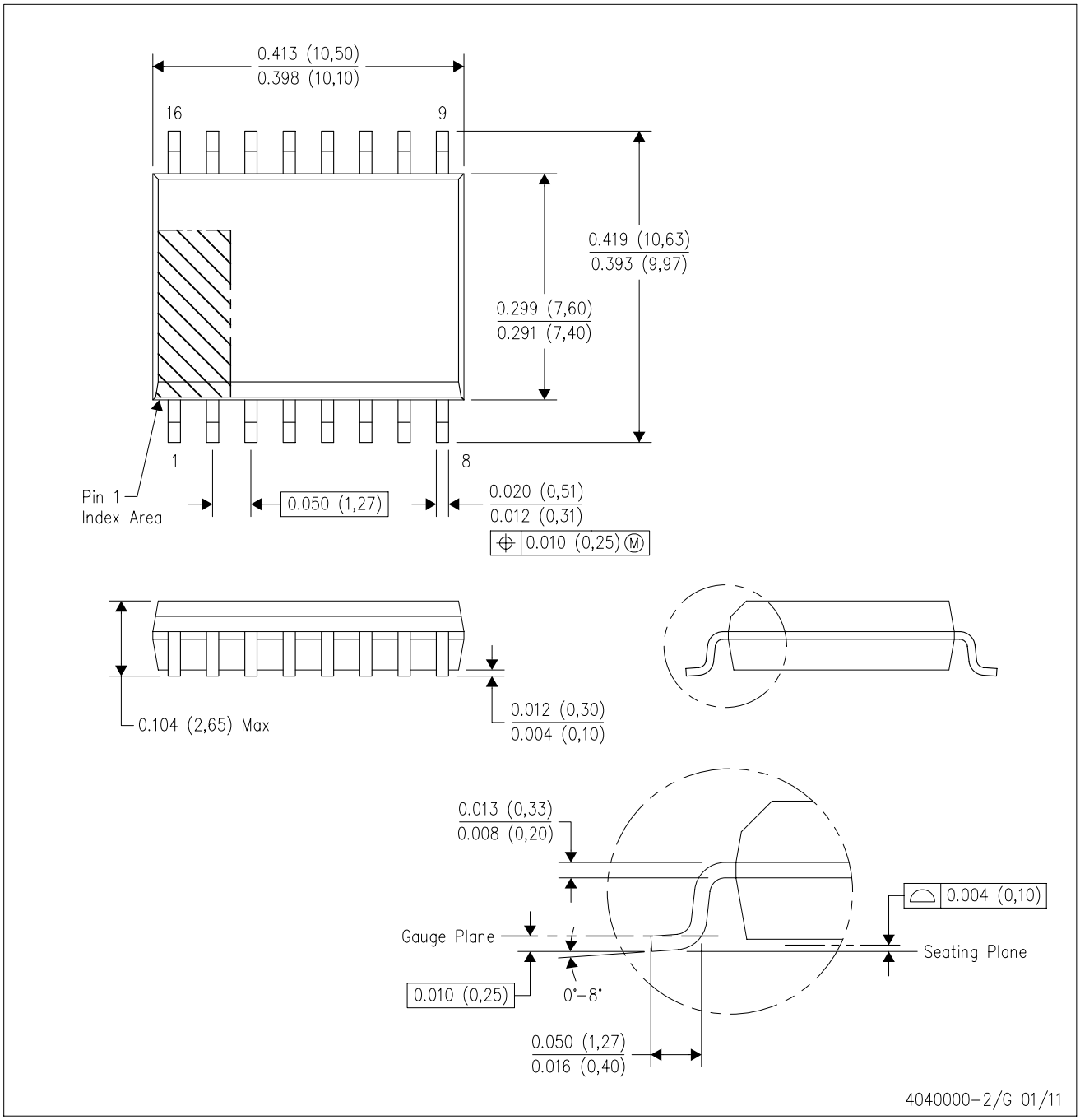

NOTES:
A. All linear dimensions are in inches (millimeters). Dimensioning and tolerancing per ASME Y14.5M–1994.
B. This drawing is subject to change without notice.
C. Body dimensions do not include mold flash or protrusion not to exceed 0.006 (0,15).
D. Falls within JEDEC MS–013 variation AA.

DW (R–PDSO–G16) PLASTIC SMALL OUTLINE

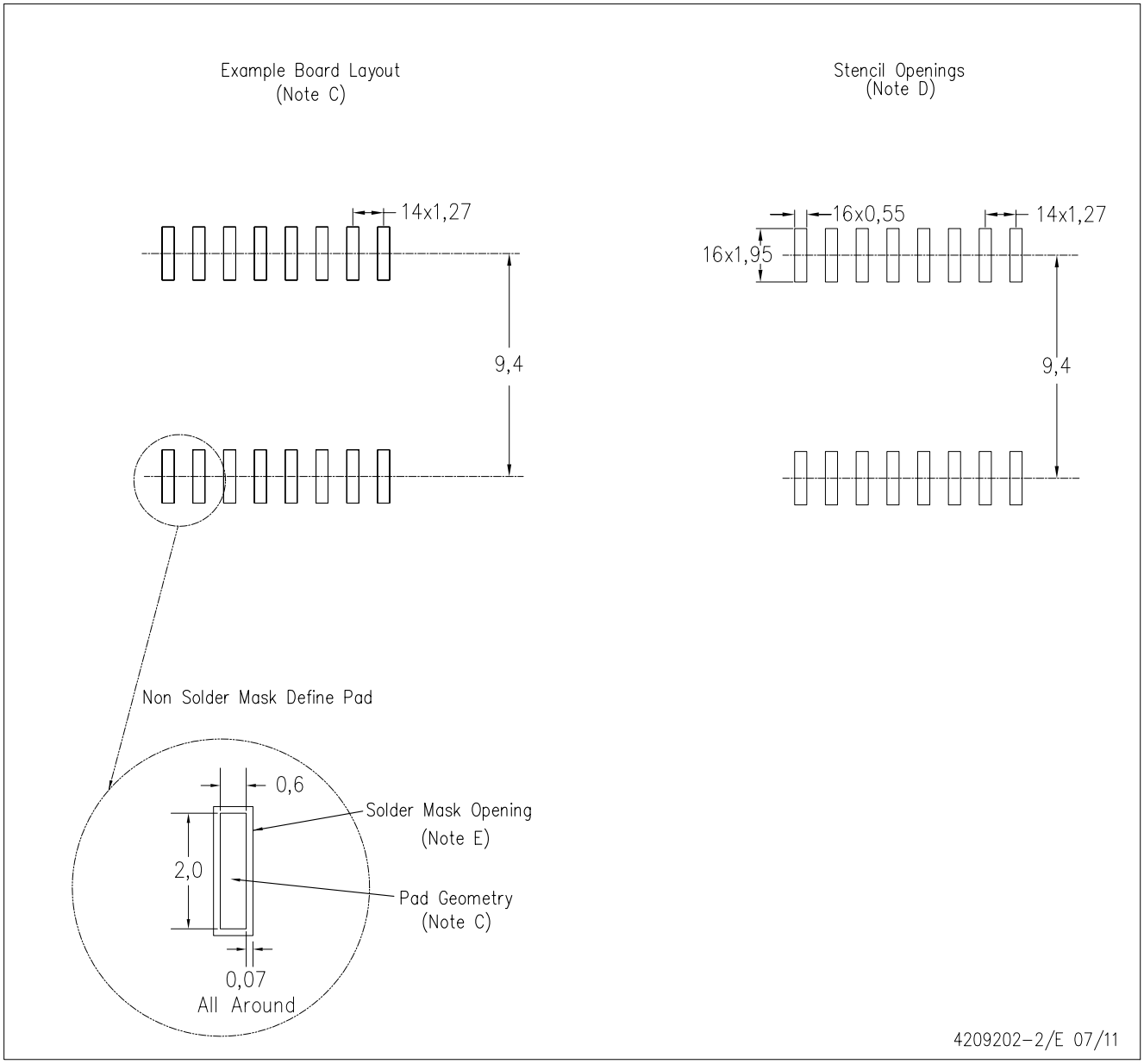

NOTES:
A. All linear dimensions are in millimeters.
B. This drawing is subject to change without notice.
C. Refer to IPC7351 for alternate board design.
D. Laser cutting apertures with trapezoidal walls and also rounding corners will offer better paste release. Customers should contact their board assembly site for stencil design recommendations. Refer to IPC–7525
E. Customers should contact their board fabrication site for solder mask tolerances between and around signal pads.

MECHANICAL DATA

NS (R-PDSO-G)** **PLASTIC SMALL-OUTLINE PACKAGE**

14-PINS SHOWN

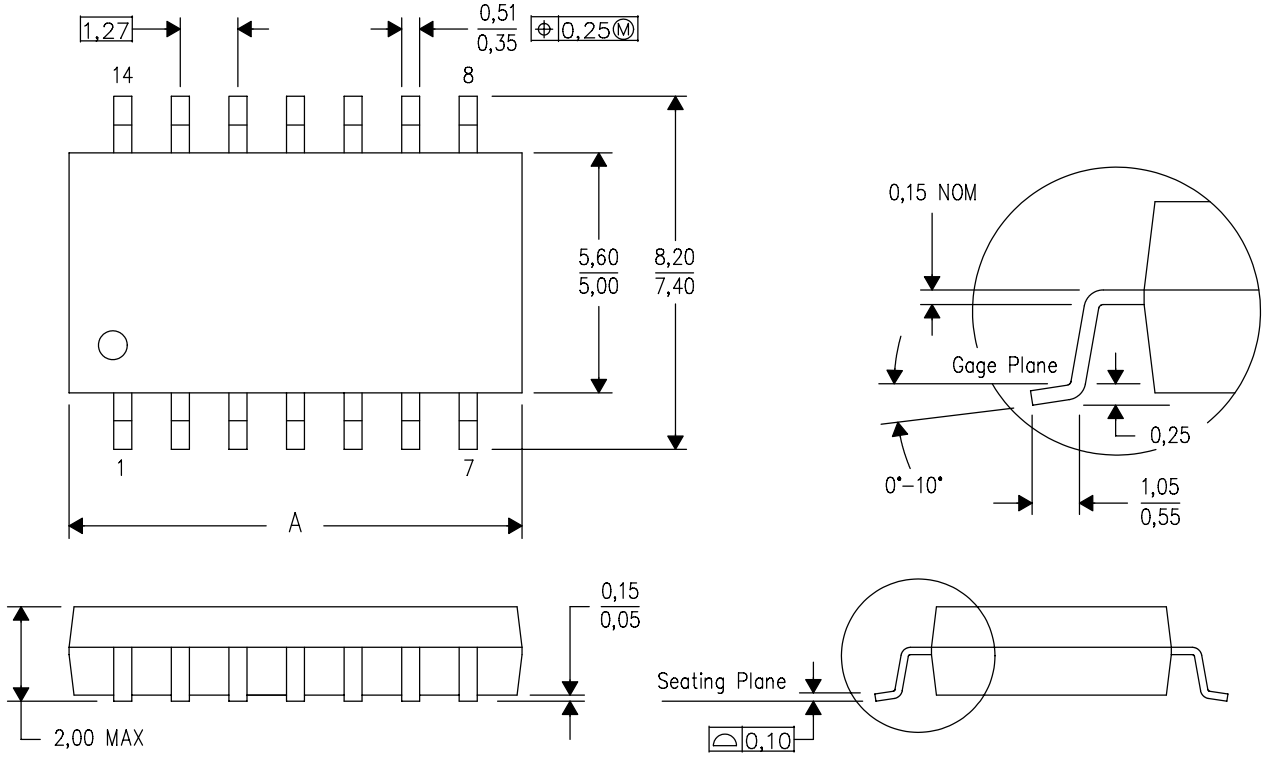

DIM \ PINS **	14	16	20	24
A MAX	10,50	10,50	12,90	15,30
A MIN	9,90	9,90	12,30	14,70

4040062/C 03/03

NOTES:
A. All linear dimensions are in millimeters.
B. This drawing is subject to change without notice.
C. Body dimensions do not include mold flash or protrusion, not to exceed 0,15.

IMPORTANT NOTICE

Texas Instruments Incorporated and its subsidiaries (TI) reserve the right to make corrections, enhancements, improvements and other changes to its semiconductor products and services per JESD46, latest issue, and to discontinue any product or service per JESD48, latest issue. Buyers should obtain the latest relevant information before placing orders and should verify that such information is current and complete. All semiconductor products (also referred to herein as “components”) are sold subject to TI’s terms and conditions of sale supplied at the time of order acknowledgment.

TI warrants performance of its components to the specifications applicable at the time of sale, in accordance with the warranty in TI’s terms and conditions of sale of semiconductor products. Testing and other quality control techniques are used to the extent TI deems necessary to support this warranty. Except where mandated by applicable law, testing of all parameters of each component is not necessarily performed.

TI assumes no liability for applications assistance or the design of Buyers’ products. Buyers are responsible for their products and applications using TI components. To minimize the risks associated with Buyers’ products and applications, Buyers should provide adequate design and operating safeguards.

TI does not warrant or represent that any license, either express or implied, is granted under any patent right, copyright, mask work right, or other intellectual property right relating to any combination, machine, or process in which TI components or services are used. Information published by TI regarding third-party products or services does not constitute a license to use such products or services or a warranty or endorsement thereof. Use of such information may require a license from a third party under the patents or other intellectual property of the third party, or a license from TI under the patents or other intellectual property of TI.

Reproduction of significant portions of TI information in TI data books or data sheets is permissible only if reproduction is without alteration and is accompanied by all associated warranties, conditions, limitations, and notices. TI is not responsible or liable for such altered documentation. Information of third parties may be subject to additional restrictions.

Resale of TI components or services with statements different from or beyond the parameters stated by TI for that component or service voids all express and any implied warranties for the associated TI component or service and is an unfair and deceptive business practice. TI is not responsible or liable for any such statements.

Buyer acknowledges and agrees that it is solely responsible for compliance with all legal, regulatory and safety-related requirements concerning its products, and any use of TI components in its applications, notwithstanding any applications-related information or support that may be provided by TI. Buyer represents and agrees that it has all the necessary expertise to create and implement safeguards which anticipate dangerous consequences of failures, monitor failures and their consequences, lessen the likelihood of failures that might cause harm and take appropriate remedial actions. Buyer will fully indemnify TI and its representatives against any damages arising out of the use of any TI components in safety-critical applications.

In some cases, TI components may be promoted specifically to facilitate safety-related applications. With such components, TI’s goal is to help enable customers to design and create their own end-product solutions that meet applicable functional safety standards and requirements. Nonetheless, such components are subject to these terms.

No TI components are authorized for use in FDA Class III (or similar life-critical medical equipment) unless authorized officers of the parties have executed a special agreement specifically governing such use.

Only those TI components which TI has specifically designated as military grade or “enhanced plastic” are designed and intended for use in military/aerospace applications or environments. Buyer acknowledges and agrees that any military or aerospace use of TI components which have ***not*** been so designated is solely at the Buyer's risk, and that Buyer is solely responsible for compliance with all legal and regulatory requirements in connection with such use.

TI has specifically designated certain components as meeting ISO/TS16949 requirements, mainly for automotive use. In any case of use of non-designated products, TI will not be responsible for any failure to meet ISO/TS16949.

Products		**Applications**	
Audio	www.ti.com/audio	Automotive and Transportation	www.ti.com/automotive
Amplifiers	amplifier.ti.com	Communications and Telecom	www.ti.com/communications
Data Converters	dataconverter.ti.com	Computers and Peripherals	www.ti.com/computers
DLP® Products	www.dlp.com	Consumer Electronics	www.ti.com/consumer-apps
DSP	dsp.ti.com	Energy and Lighting	www.ti.com/energy
Clocks and Timers	www.ti.com/clocks	Industrial	www.ti.com/industrial
Interface	interface.ti.com	Medical	www.ti.com/medical
Logic	logic.ti.com	Security	www.ti.com/security
Power Mgmt	power.ti.com	Space, Avionics and Defense	www.ti.com/space-avionics-defense
Microcontrollers	microcontroller.ti.com	Video and Imaging	www.ti.com/video
RFID	www.ti-rfid.com		
OMAP Applications Processors	www.ti.com/omap	**TI E2E Community**	e2e.ti.com
Wireless Connectivity	www.ti.com/wirelessconnectivity		

Mailing Address: Texas Instruments, Post Office Box 655303, Dallas, Texas 75265
Copyright © 2013, Texas Instruments Incorporated

О компании

ООО "ТрейдЭлектроникс" - это оперативные поставки широкого спектра электронных компонентов отечественного и импортного производства напрямую от производителей и с крупнейших мировых складов. Реализуемая нашей компанией продукция насчитывает более полумиллиона наименований.

Благодаря этому наша компания предлагает к поставке практически не ограниченный ассортимент компонентов как оптовыми, мелкооптовыми партиями, так и в розницу.

Наличие собственной эффективной системы логистики обеспечивает надежную поставку продукции по конкурентным ценам в точно указанные сроки.

Срок поставки со стоков в **Европе и Америке – от 3 до 14 дней.**

Срок поставки из **Азии – от 10 дней.**

Благодаря развитой сети поставщиков, помогаем в поиске и приобретении экзотичных или снятых с производства компонентов.

Предоставляем спец цены на элементы для создания инженерных сэмплов.

Упорный труд, качественный результат дают нам право быть уверенными в себе и надежными для наших клиентов.

Наша компания это:

- Гарантия качества поставляемой продукции
- Широкий ассортимент
- Минимальные сроки поставок
- Техническая поддержка
- Подбор комплектации
- Индивидуальный подход
- Гибкое ценообразование

Наша организация особенно сильна в поставках модулей, микросхем, пассивных компонентов, ксайленсах (XC), EPF, EPM и силовой электроники.

Большой выбор предлагаемой продукции, различные виды оплаты и доставки, позволят Вам сэкономить время и получить максимум выгоды от сотрудничества с нами!

Trade Electronics.ru

гарантия бесперебойности производства и качества выпускаемой продукции

Перечень производителей, продукцию которых мы поставляем на российский рынок

AMD
ANALOG DEVICES
BOURNS
Coilcraft
élantec Semiconductor, Inc.
HARRIS
Infineon
JRC
MICREL
MOTOROLA
nichicon
PHILIPS
ROHM
SGS-THOMSON
Sipex
TAIYO YUDEN
TOKO
ZILOG
Winbond
Allegro
ATMEL
BURR - BROWN
EXAR
HITACHI
intel
Lattice
muRata
OKI
QUALCOMM
SAMSUNG
SHARP
SONY
TDK
TOSHIBA
KYOCERA
ALTERA
AVX
CITILYST
CYPRESS
FAIRCHILD SEMICONDUCTOR
HOLTEK
International IOR Rectifier
LINEAR TECHNOLOGY
MITSUBISHI
National Semiconductor
ON Semiconductor
REALTEK
SANYO
SHINDENGEN
SGS
TECCOR
TUNDRA
XILINX
Amphenol
Bay Linear
CIRRUS LOGIC
DALLAS
FUJITSU
IDT
intersil
MAXIM
molex
NEC
Panasonic
RENESAS
SII
SIEMENS
ST
Texas Instruments
VISHAY
ZETEX SEMICONDUCTORS

Trade Electronics.ru

гарантия бесперебойности производства и качества выпускаемой продукции

С удовольствием будем прорабатывать для Вас поставки всех необходимых компонентов по текущим запросам для скорейшего выявления групп элементов, по которым сотрудничество именно с нашей компанией будет для Вас максимально выгодным!

С уважением,

Менеджер отдела продаж ООО

«Трейд Электроникс»

Шишлаков Евгений

8 (495)668-30-28 доб 169

manager28@tradeelectronics.ru

http://www.tradeelectronics.ru/