FAIRCHILD SEMICONDUCTOR™

October 2008

QFET®

FQD7N20L / FQU7N20L

200V LOGIC N-Channel MOSFET

General Description

These N-Channel enhancement mode power field effect transistors are produced using Fairchild's proprietary, planar stripe, DMOS technology.
This advanced technology is especially tailored to minimize on-state resistance, provide superior switching performance, and withstand high energy pulse in the avalanche and commutation modes. These devices are well suited for high efficiency switching DC/DC converters, switch mode power supplies, and motor control.

Features

- 5.5A, 200V, $R_{DS(on)}$ = 0.75Ω @V_{GS} = 10 V
- Low gate charge (typical 6.8 nC)
- Low Crss (typical 8.5 pF)
- Fast switching
- 100% avalanche tested
- Improved dv/dt capability
- Low level gate drive requirement allowing direct operation from logic drivers
- RoHS Compliant

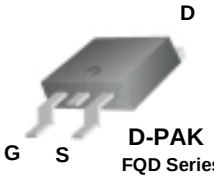

D-PAK
FQD Series

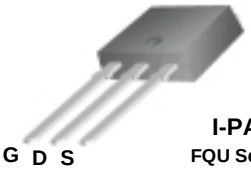

I-PAK
FQU Series

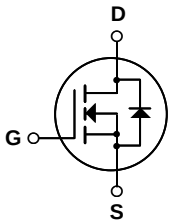

Absolute Maximum Ratings

T_C = 25°C unless otherwise noted

Symbol	Parameter		FQD7N20L / FQU7N20L	Units
V_{DSS}	Drain-Source Voltage		200	V
I_D	Drain Current - Continuous (T_C = 25°C)		5.5	A
	- Continuous (T_C = 100°C)		3.48	A
I_{DM}	Drain Current - Pulsed	(Note 1)	22	A
V_{GSS}	Gate-Source Voltage		± 20	V
E_{AS}	Single Pulsed Avalanche Energy	(Note 2)	73	mJ
I_{AR}	Avalanche Current	(Note 1)	5.5	A
E_{AR}	Repetitive Avalanche Energy	(Note 1)	4.5	mJ
dv/dt	Peak Diode Recovery dv/dt	(Note 3)	5.5	V/ns
P_D	Power Dissipation (T_A = 25°C) *		2.5	W
	Power Dissipation (T_C = 25°C)		45	W
	- Derate above 25°C		0.36	W/°C
T_J, T_{STG}	Operating and Storage Temperature Range		-55 to +150	°C
T_L	Maximum lead temperature for soldering purposes, 1/8" from case for 5 seconds		300	°C

Thermal Characteristics

Symbol	Parameter	Typ	Max	Units
$R_{\theta JC}$	Thermal Resistance, Junction-to-Case	--	2.78	°C/W
$R_{\theta JA}$	Thermal Resistance, Junction-to-Ambient *	--	50	°C/W
$R_{\theta JA}$	Thermal Resistance, Junction-to-Ambient	--	110	°C/W

* When mounted on the minimum pad size recommended (PCB Mount)

©2008 Fairchild Semiconductor International

Electrical Characteristics

T_C = 25°C unless otherwise noted

Symbol	Parameter	Test Conditions	Min	Typ	Max	Units
Off Characteristics						
BV_{DSS}	Drain-Source Breakdown Voltage	V_{GS} = 0 V, I_D = 250 μA	200	--	--	V
ΔBV_{DSS} / ΔT_J	Breakdown Voltage Temperature Coefficient	I_D = 250 μA, Referenced to 25°C	--	0.17	--	V/°C
I_{DSS}	Zero Gate Voltage Drain Current	V_{DS} = 200 V, V_{GS} = 0 V	--	--	1	μA
		V_{DS} = 160 V, T_C = 125°C	--	--	10	μA
I_{GSSF}	Gate-Body Leakage Current, Forward	V_{GS} = 20 V, V_{DS} = 0 V	--	--	100	nA
I_{GSSR}	Gate-Body Leakage Current, Reverse	V_{GS} = -20 V, V_{DS} = 0 V	--	--	-100	nA
On Characteristics						
$V_{GS(th)}$	Gate Threshold Voltage	V_{DS} = V_{GS}, I_D = 250 μA	1.0	--	2.0	V
$R_{DS(on)}$	Static Drain-Source On-Resistance	V_{GS} = 10 V, I_D = 2.75 A V_{GS} = 5 V, I_D = 2.75 A (Note 4)	--	0.59 0.62	0.75 0.78	Ω
g_{FS}	Forward Transconductance	V_{DS} = 30 V, I_D = 2.75 A	--	5.6	--	S
Dynamic Characteristics						
C_{iss}	Input Capacitance	V_{DS} = 25 V, V_{GS} = 0 V, f = 1.0 MHz	--	390	500	pF
C_{oss}	Output Capacitance		--	55	70	pF
C_{rss}	Reverse Transfer Capacitance		--	8.5	11	pF
Switching Characteristics						
$t_{d(on)}$	Turn-On Delay Time	V_{DD} = 100 V, I_D = 6.5 A, R_G = 25 Ω (Note 4, 5)	--	12	35	ns
t_r	Turn-On Rise Time		--	125	260	ns
$t_{d(off)}$	Turn-Off Delay Time		--	20	50	ns
t_f	Turn-Off Fall Time		--	65	140	ns
Q_g	Total Gate Charge	V_{DS} = 160 V, I_D = 6.5 A, V_{GS} = 5 V (Note 4, 5)	--	6.8	9.0	nC
Q_{gs}	Gate-Source Charge		--	1.6	--	nC
Q_{gd}	Gate-Drain Charge		--	3.4	--	nC
Drain-Source Diode Characteristics and Maximum Ratings						
I_S	Maximum Continuous Drain-Source Diode Forward Current		--	--	5.5	A
I_{SM}	Maximum Pulsed Drain-Source Diode Forward Current		--	--	22	A
V_{SD}	Drain-Source Diode Forward Voltage	V_{GS} = 0 V, I_S = 5.5 A	--	--	1.5	V
t_{rr}	Reverse Recovery Time	V_{GS} = 0 V, I_S = 6.5 A, dI_F / dt = 100 A/μs (Note 4)	--	110	--	ns
Q_{rr}	Reverse Recovery Charge		--	0.44	--	μC

Notes:
1. Repetitive Rating : Pulse width limited by maximum junction temperature
2. L = 3.6mH, I_{AS} = 5.5A, V_{DD} = 50V, R_G = 25 Ω, Starting T_J = 25°C
3. I_{SD} ≤ 6.5A, di/dt ≤ 300A/μs, V_{DD} ≤ $BV_{DSS,}$ Starting T_J = 25°C
4. Pulse Test : Pulse width ≤ 300μs, Duty cycle ≤ 2%
5. Essentially independent of operating temperature

©2008 Fairchild Semiconductor International

Typical Characteristics

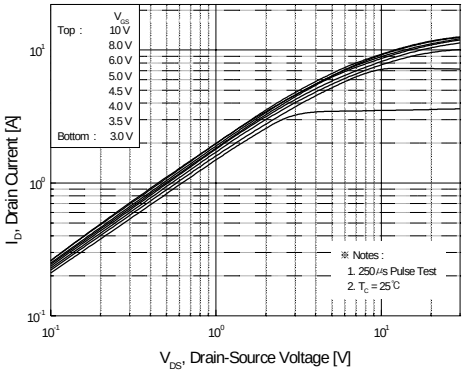

Figure 1. On-Region Characteristics

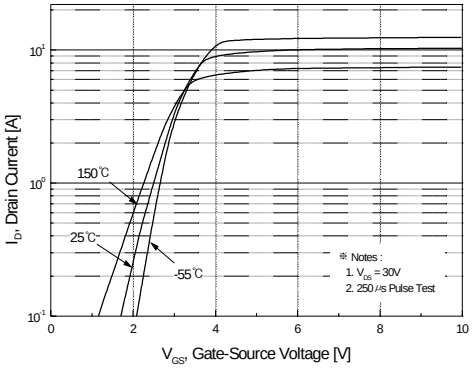

Figure 2. Transfer Characteristics

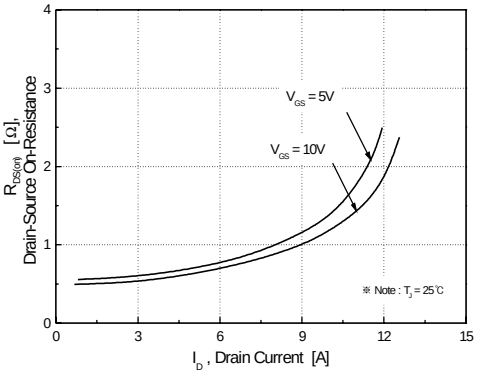

Figure 3. On-Resistance Variation vs. Drain Current and Gate Voltage

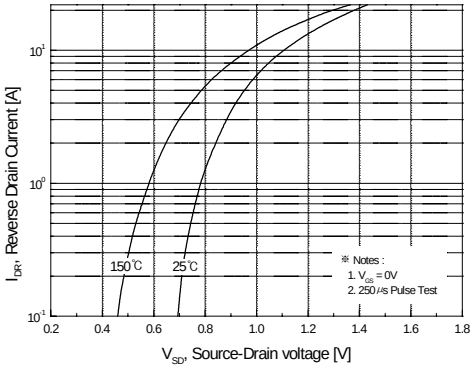

Figure 4. Body Diode Forward Voltage Variation vs. Source Current and Temperature

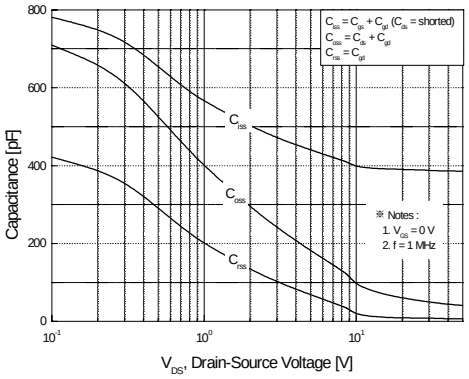

Figure 5. Capacitance Characteristics

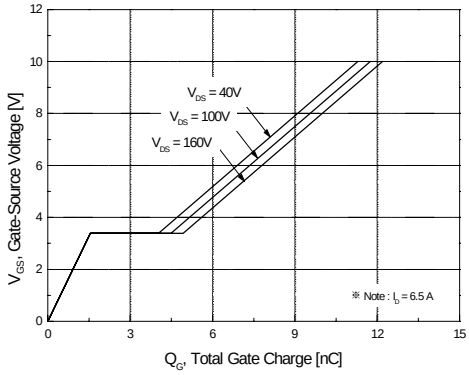

Figure 6. Gate Charge Characteristics

©2008 Fairchild Semiconductor International

Typical Characteristics (Continued)

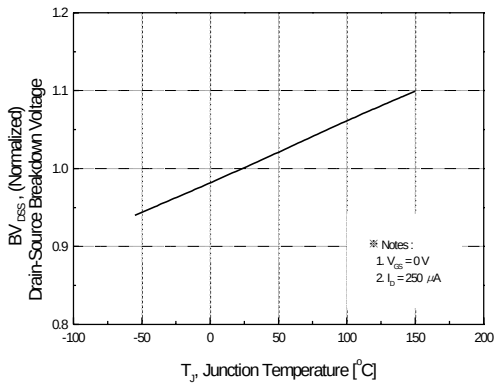

Figure 7. Breakdown Voltage Variation vs. Temperature

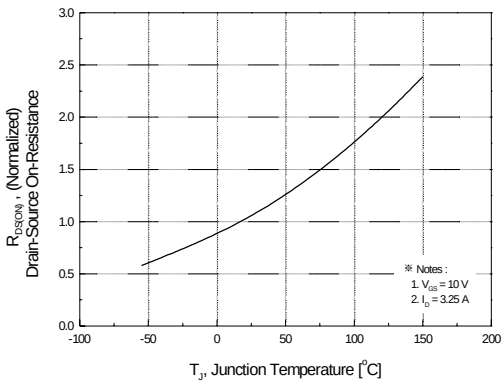

Figure 8. On-Resistance Variation vs. Temperature

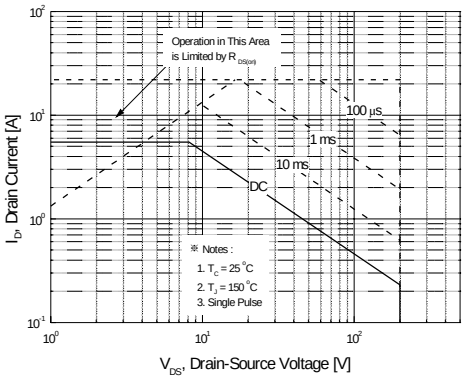

Figure 9. Maximum Safe Operating Area

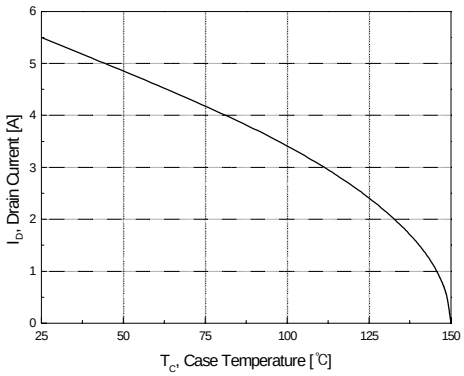

Figure 10. Maximum Drain Current vs. Case Temperature

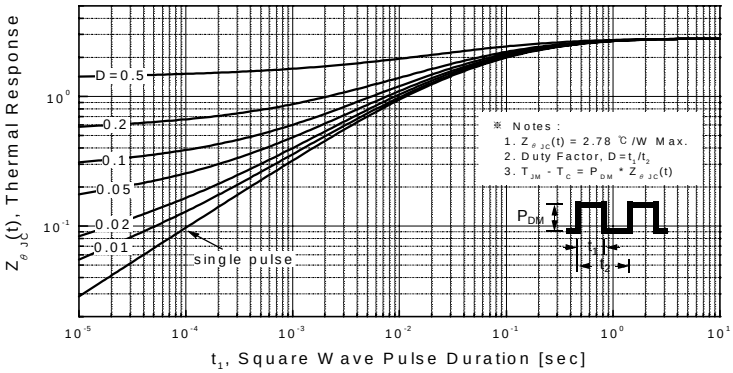

Figure 11. Transient Thermal Response Curve

Gate Charge Test Circuit & Waveform

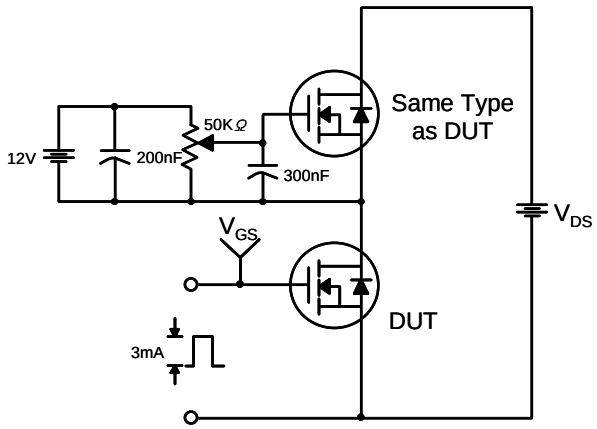

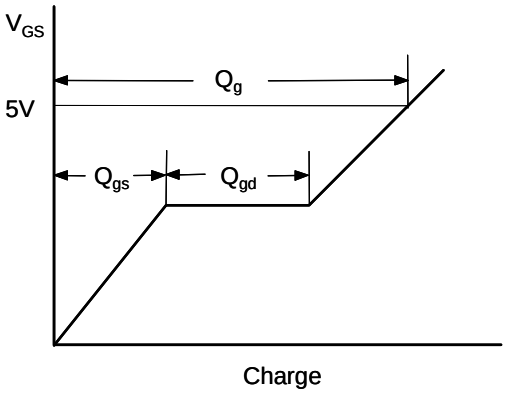

Resistive Switching Test Circuit & Waveforms

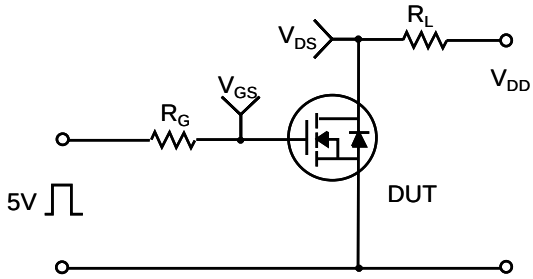

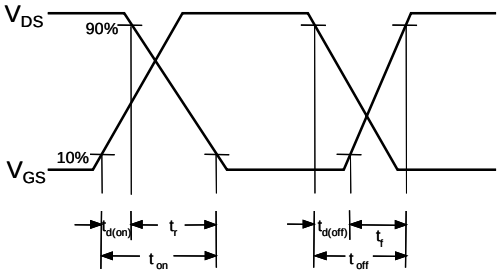

Unclamped Inductive Switching Test Circuit & Waveforms

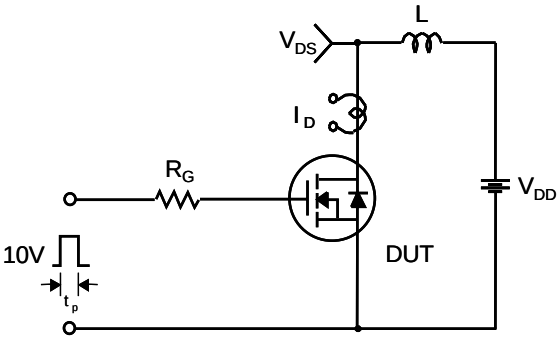

$$E_{AS} = \frac{1}{2} L I_{AS}^2 \frac{BV_{DSS}}{BV_{DSS} - V_{DD}}$$

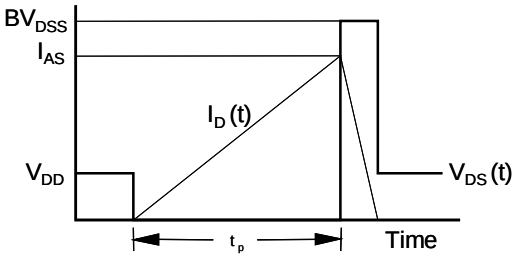

Peak Diode Recovery dv/dt Test Circuit & Waveforms

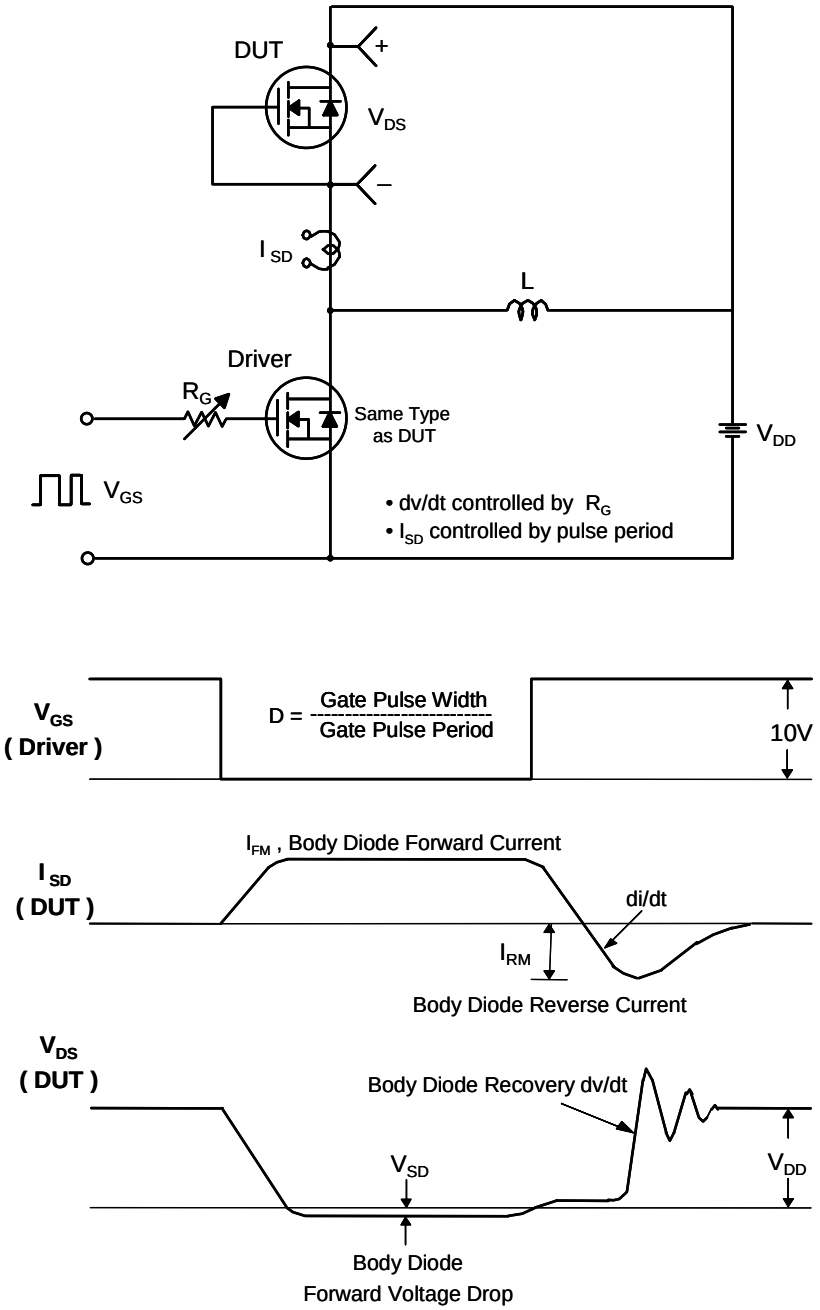

©2008 Fairchild Semiconductor International

Mechanical Dimensions

D - PAK

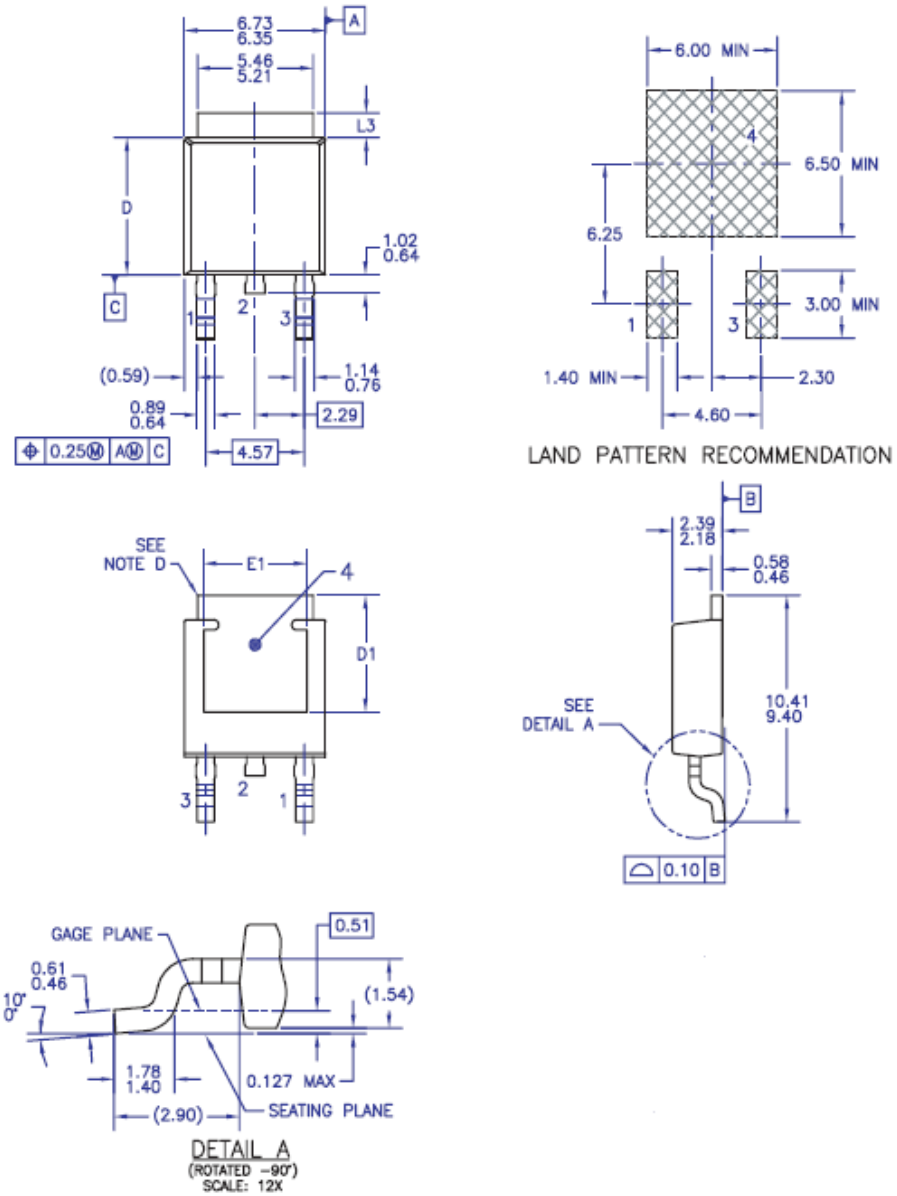

Dimensions in Millimeters

Mechanical Dimensions

I - PAK

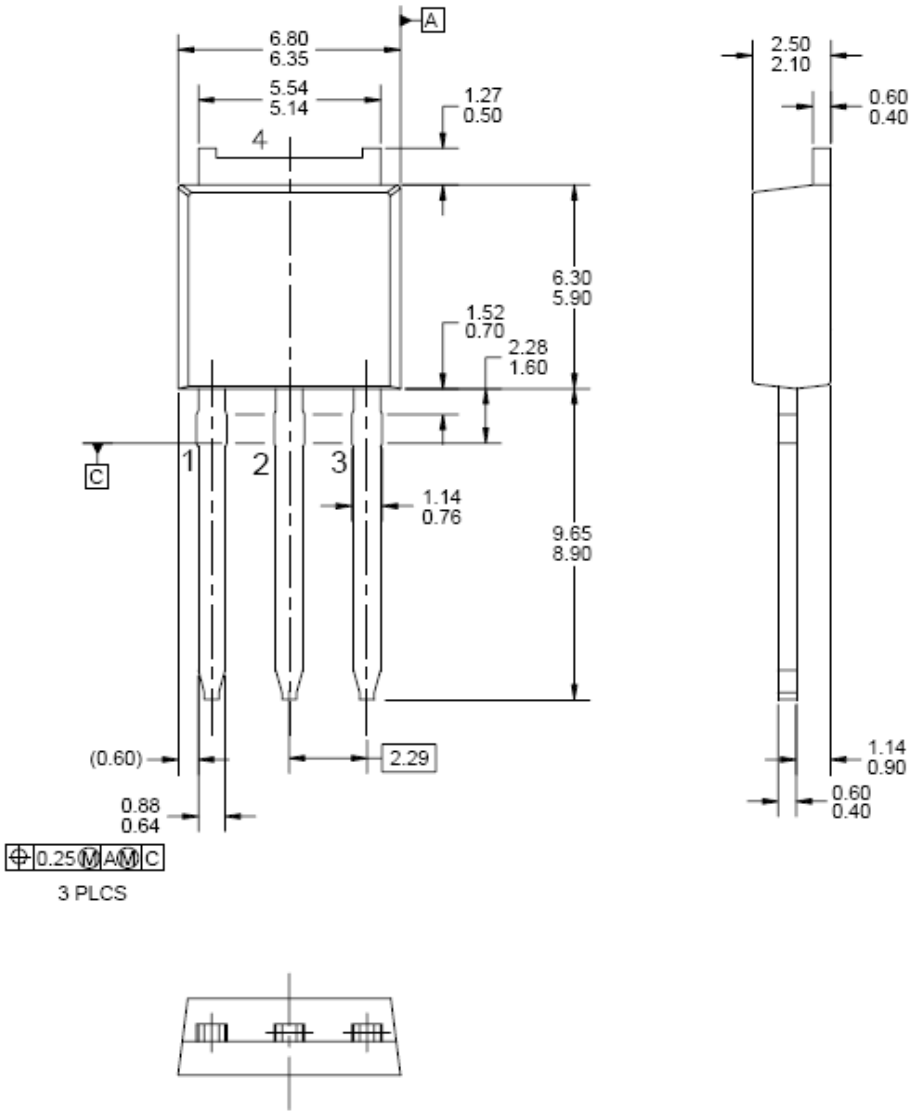

Dimensions in Millimeters

FAIRCHILD SEMICONDUCTOR®

TRADEMARKS

The following includes registered and unregistered trademarks and service marks, owned by Fairchild Semiconductor and/or its global subsidiaries, and is not intended to be an exhaustive list of all such trademarks.

Build it Now™
CorePLUS™
CorePOWER™
CROSSVOLT™
CTL™
Current Transfer Logic™
EcoSPARK®
EfficentMax™
EZSWITCH™ *
™
®
Fairchild®
Fairchild Semiconductor®
FACT Quiet Series™
FACT®
FAST®
FastvCore™
FlashWriter® *
FPS™
F-PFS™
FRFET®
Global Power Resource℠
Green FPS™
Green FPS™ e-Series™
GTO™
IntelliMAX™
ISOPLANAR™
MegaBuck™
MICROCOUPLER™
MicroFET™
MicroPak™
MillerDrive™
MotionMax™
Motion-SPM™
OPTOLOGIC®
OPTOPLANAR®
®
PDP SPM™
Power-SPM™
PowerTrench®
PowerXS™
Programmable Active Droop™
QFET®
QS™
Quiet Series™
RapidConfigure™
™
Saving our world, 1mW /W /kW at a time™
SmartMax™
SMART START™
SPM®
STEALTH™
SuperFET™
SuperSOT™-3
SuperSOT™-6
SuperSOT™-8
SupreMOS™
SyncFET™
SYSTEM GENERAL ®
The Power Franchise®
the power franchise
TinyBoost™
TinyBuck™
TinyLogic®
TINYOPTO™
TinyPower™
TinyPWM™
TinyWire™
µSerDes™
µSerDes™
UHC®
Ultra FRFET™
UniFET™
VCX™
VisualMax™
XS™

* EZSWITCH™ and FlashWriter® are trademarks of System General Corporation, used under license by Fairchild Semiconductor.

DISCLAIMER

FAIRCHILD SEMICONDUCTOR RESERVES THE RIGHT TO MAKE CHANGES WITHOUT FURTHER NOTICE TO ANY PRODUCTS HEREIN TO IMPROVE RELIABILITY, FUNCTION, OR DESIGN. FAIRCHILD DOES NOT ASSUME ANY LIABILITY ARISING OUT OF THE APPLICATION OR USE OF ANY PRODUCT OR CIRCUIT DESCRIBED HEREIN; NEITHER DOES IT CONVEY ANY LICENSE UNDER ITS PATENT RIGHTS, NOR THE RIGHTS OF OTHERS. THESE SPECIFICATIONS DO NOT EXPAND THE TERMS OF FAIRCHILD'S WORLDWIDE TERMS AND CONDITIONS, SPECIFICALLY THE WARRANTY THEREIN, WHICH COVERS THESE PRODUCTS.

LIFE SUPPORT POLICY

FAIRCHILD'S PRODUCTS ARE NOT AUTHORIZED FOR USE AS CRITICAL COMPONENTS IN LIFE SUPPORT DEVICES OR SYSTEMS WITHOUT THE EXPRESS WRITTEN APPROVAL OF FAIRCHILD SEMICONDUCTOR CORPORATION.

As used herein:

1. Life support devices or systems are devices or systems which, (a) are intended for surgical implant into the body or (b) support or sustain life, and (c) whose failure to perform when properly used in accordance with instructions for use provided in the labeling, can be reasonably expected to result in a significant injury of the user.
2. A critical component in any component of a life support, device, or system whose failure to perform can be reasonably expected to cause the failure of the life support device or system, or to affect its safety or effectiveness.

ANTI-COUNTERFEITING POLICY

Fairchild Semiconductor Corporation's Anti-Counterfeiting Policy. Farichild's Anti-Counterfeiting Policy is also stated on our external website, www.fairchildsemi.com, under Sales Support.

Counterfeiting of semiconductor parts is a growing problem in the industry. All manufactures of semiconductor products are experiencing counterfeiting of their parts. Customers who inadvertently purchase counterfeit parts experience many problems such as loss of brand reputation, substandard performance, failed application, and increased cost of production and manufacturing delays. Fairchild is taking strong measures to protect ourselves and our customers from the proliferation of counterfeit parts. Farichild strongly encourages customers to purchase Farichild parts either directly from Fairchild or from Authorized Fairchild Distributors who are listed by country on our web page cited above. Products customers buy either from fairchild directly or from Authorized Fairchild Distributors are genuine parts, have full traceability, meet Fairchild's quality standards for handing and storage and provide access to Farichild's full range of up-to-date technical and product information. Fairchild and our Authorized Distributors will stand behind all warranties and will appropriately address and warranty issues that may arise. Fairchild will not provide any warranty coverage or other assistance for parts bought from Unauthorized Sources. Farichild is committed to combat this global problem and encourage our customers to do their part in stopping this practice by buying direct or from authorized distributors.

PRODUCT STATUS DEFINITIONS
Definition of Terms

Datasheet Identification	Product Status	Definition
Advance Information	Formative / In Design	Datasheet contains the design specifications for product development. Specifications may change in any manner without notice.
Preliminary	First Production	Datasheet contains preliminary data; supplementary data will be published at a later date. Fairchild Semiconductor reserves the right to make changes at any time without notice to improve design.
No Identification Needed	Full Production	Datasheet contains final specifications. Fairchild Semiconductor reserves the right to make changes at any time without notice to improve the design.
Obsolete	Not In Production	Datasheet contains specifications on a product that is discontinued by Fairchild Semiconductor. The datasheet is for reference information only.

Rev. I37

О компании

ООО "ТрейдЭлектроникс" - это оперативные поставки широкого спектра электронных компонентов отечественного и импортного производства напрямую от производителей и с крупнейших мировых складов. Реализуемая нашей компанией продукция насчитывает более полумиллиона наименований.

Благодаря этому наша компания предлагает к поставке практически не ограниченный ассортимент компонентов как оптовыми, мелкооптовыми партиями, так и в розницу.

Наличие собственной эффективной системы логистики обеспечивает надежную поставку продукции по конкурентным ценам в точно указанные сроки.

Срок поставки со стоков в **Европе и Америке – от 3 до 14 дней.**

Срок поставки из **Азии – от 10 дней.**

Благодаря развитой сети поставщиков, помогаем в поиске и приобретении экзотичных или снятых с производства компонентов.

Предоставляем спец цены на элементы для создания инженерных сэмплов.

Упорный труд, качественный результат дают нам право быть уверенными в себе и надежными для наших клиентов.

Наша компания это:

- Гарантия качества поставляемой продукции
- Широкий ассортимент
- Минимальные сроки поставок
- Техническая поддержка
- Подбор комплектации
- Индивидуальный подход
- Гибкое ценообразование

Наша организация особенно сильна в поставках модулей, микросхем, пассивных компонентов, ксайленсах (XC), EPF, EPM и силовой электроники.

Большой выбор предлагаемой продукции, различные виды оплаты и доставки, позволят Вам сэкономить время и получить максимум выгоды от сотрудничества с нами!

Trade Electronics.ru

гарантия бесперебойности производства и качества выпускаемой продукции

Перечень производителей, продукцию которых мы поставляем на российский рынок

AMD
ANALOG DEVICES
BOURNS
Coilcraft
élantec Semiconductor, Inc.
HARRIS
Infineon
JRC
MICREL
MOTOROLA
nichicon
PHILIPS
ROHM
SGS-THOMSON
Sipex
TAIYO YUDEN
TOKO
ZILOG
Winbond
Allegro
ATMEL
BURR - BROWN
EXAR
HITACHI
intel
Lattice
muRata
OKI
QUALCOMM
SAMSUNG
SHARP
SONY
TDK
TOSHIBA
KYOCERA
ALTERA
AVX
CITILYST
CYPRESS
FAIRCHILD SEMICONDUCTOR
HOLTEK
International IOR Rectifier
LINEAR TECHNOLOGY
MITSUBISHI
National Semiconductor
ON Semiconductor
REALTEK
SANYO
SHINDENGEN
SGS
TECCOR
TUNDRA
XILINX
Amphenol
Bay Linear
CIRRUS LOGIC
DALLAS
FUJITSU
IDT
intersil
MAXIM
molex
NEC
Panasonic
RENESAS
SII
SIEMENS
ST
Texas Instruments
VISHAY
ZETEX SEMICONDUCTORS

Trade Electronics.ru

гарантия бесперебойности производства и качества выпускаемой продукции

С удовольствием будем прорабатывать для Вас поставки всех необходимых компонентов по текущим запросам для скорейшего выявления групп элементов, по которым сотрудничество именно с нашей компанией будет для Вас максимально выгодным!

С уважением,

Менеджер отдела продаж ООО

«Трейд Электроникс»

Шишлаков Евгений

8 (495)668-30-28 доб 169

manager28@tradeelectronics.ru

http://www.tradeelectronics.ru/