Radial Box Metallized Polyester Capacitors

The Type 160 series radial lead metallized polyester box capacitors are constructed in rugged rectangular plastic cases with lead spacings that are standard in the electronics industry. All Type 160 capacitors are available in bulk with a .217" ±.039" lead length, and they are good for general purpose applications such as bypass, decoupling, energy storage/discharge and arc suppression.

Highlights

- RoHS compliant
- Rugged plastic case
- Case and epoxy fill meets UL94V0
- 10 mm through 27.5 mm lead spacings
- Non-inductively wound
- Non-polar
- Wire lead material, tinned copper clad steel

Specifications

Capacitance Range: 0.0022 µF to 10.0 µF

Voltage Range: 63 Vdc to 1000 Vdc (40 Vac - 250 Vac 50/60 Hz)

Capacitance Tolerance: ±5%, ±10%, ±20%

Operating Temperature Range: –55 ºC to +125 ºC (with 50% Vdc derating >85 ºC)

Dielectric Withstand Voltage: 1.6 x rated voltage for 2 sec @ +25 ºC ±5 ºC

Dissipation Factor (DF): $\tan\delta \times 10^{-4}$ at 25 ºC ±5 ºC

kHz	C ≤1 µF	C >1 µF
1	≤100	≤100
10	≥150	

Total Self Inductance (L):

Pitch (mm)	10	15	22.5	27.5
L (nH) ≈	9	10	18	18

Long Term Stability (after two years): Capacitance change $\Delta C/C \leq \pm 3\%$ under standard environmental conditions

Corona (Partial Discharge Inception Voltage): 200 Vac for 100 Vdc, 200 Vdc
250 Vac for 400 Vdc, 630 Vdc
300 Vac for 1000 Vdc

Maximum Pulse Rise Time (dv/dt):

	Pitch (mm)			
Vn	10	15	22.5	27.5
63	3	1.5	1	1
100/160	6/8	3	2	1
250	11	7	4	3
400	20	10	5.5	5
630	30	15	8	7
1000	60	25	15	10

If the working voltage (V) is less than the nominal voltage (Vn), the capacitor can work at higher dv/dt. In this case, the maximum value allowed is obtained by multiplying the above value with the ratio Vn/V.

Type 160 Metallized Polyester Radial Lead Capacitors

Capacitor Outline Drawing

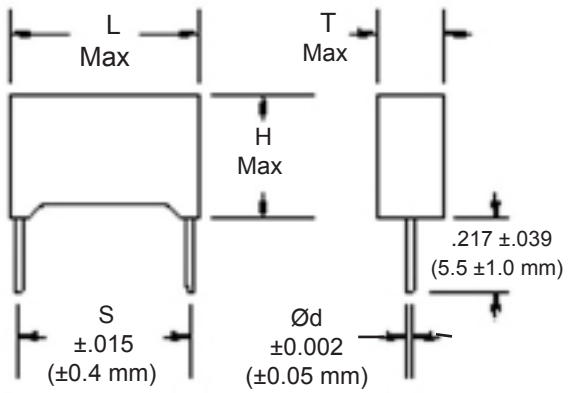

Note: The lead diameter is a maximum dimension for lead spacing ≤15 mm and a nominal for lead spacing >15 mm

Test Method and Performance

Insulation Resistance	
Test Conditions	
Temperature	25 °C ±5 °C
Voltage Charge Time	1 minute
Voltage Charge	50 Vdc for Vn < 100 Vdc
	100 Vdc for Vn ≥ 100 Vdc
Performance	
For Vn > 100 Vdc	≥30,000 MΩ for ≤ 0.33µF
	≥10,000 MΩ x µF for C > 0.33µF
For Vn ≤100 Vdc	≥10,000 MΩ for C ≤ 0.1µF
	≥1,000 MΩ x µF for ≤ 0.1µF

Damp Heat Test	
Test Conditions	
Temperature	+40 °C
Relative Humidity	95%
Test Duration	21 days
Performance	
Capacitance Change ΔC/C	≤ ±5%
DF Change Δtgδ	≤50 x 10^4 at 1 kHz
Insulation Resistance	≥ 50% of limit value

Soldering	
Test Conditions	
Soldering Temperature	260 °C ±5 °C
Soldering Duration	10 sec ±1 sec
Performance	
Capacitance Change ΔC/C	≤ ±2%
DF Change Δtgδ	≤30 x 10^{-4} at 10 kHz for C ≤1.0 µF
	≤20 x 10^{-4} at 1 kHz for C >1.0 µF

Life Test	
Test Conditions	
Temperature	+85 °C
Test Duration	1000 hrs
Voltage Applied	1.25 x Vn
Performance	
Capacitance Change ΔC/C	≤ ±5%
DF Change Δtgδ	≤30 x 10^{-4} at 10 kHz for C ≤1.0 µF
	≤20 x 10^{-4} at 1 kHz for C >1.0 µF
Insulation Resistance	≥ 50% of limit value

Ratings — RoHS Compliant

Cap (µF)	Catalog Part Number	Inches					Millimeters				
		L	T	H	S	Ød	L	T	H	S	Ød
	63 Vdc / 40 Vac										
.22	160224*63C–F	0.512	0.157	0.374	0.394	0.031	13.0	4.0	9.5	10.0	0.8
.27	160274*63C–F	0.512	0.157	0.374	0.394	0.031	13.0	4.0	9.5	10.0	0.8
.33	160334*63C–F	0.512	0.157	0.374	0.394	0.031	13.0	4.0	9.5	10.0	0.8
.39	160394*63C–F	0.512	0.157	0.374	0.394	0.031	13.0	4.0	9.5	10.0	0.8
.47	160474*63D–F	0.512	0.197	0.433	0.394	0.031	13.0	5.0	11.0	10.0	0.8
.56	160564*63D–F	0.512	0.197	0.433	0.394	0.031	13.0	5.0	11.0	10.0	0.8
.68	160684*63D–F	0.512	0.197	0.433	0.394	0.031	13.0	5.0	11.0	10.0	0.8
.68	160684*63F–F	0.709	0.197	0.433	0.591	0.031	18.0	6.0	12.0	15.0	0.8
.82	160824*63E–F	0.512	0.236	0.472	0.394	0.031	13.0	6.0	12.0	10.0	0.8
.82	160824*63F–F	0.709	0.197	0.433	0.591	0.031	18.0	5.0	11.0	15.0	0.8
1.0	160105*63E–F	0.512	0.236	0.472	0.394	0.031	13.0	6.0	12.0	10.0	0.8
1.0	160105*63F–F	0.709	0.197	0.433	0.591	0.031	18.0	5.0	11.0	15.0	0.8
1.5	160155*63F–F	0.709	0.197	0.433	0.591	0.031	18.0	6.0	12.0	15.0	0.8
2.2	160225*63G–F	0.709	0.236	0.472	0.591	0.031	18.0	7.5	13.5	15.0	0.8
3.3	160335*63M–F	1.043	0.276	0.630	0.886	0.031	26.5	7.0	16.5	22.5	0.8
4.7	160475*63N–F	1.043	0.335	0.669	0.886	0.031	26.5	8.5	17.0	22.5	0.8
6.8	160685*63O–F	1.043	0.394	0.748	0.886	0.031	26.5	10.0	19.0	22.5	0.8
10.0	160106*63P–F	1.260	0.433	0.787	1.083	0.031	32.0	11.0	20.0	27.5	0.8

* Indicates capacitance tolerance: J = ±5%, K = ±10%, M = ±20%

Type 160 Metallized Polyester Radial Lead Capacitors

RoHS Compliant

Cap (µF)	Catalog Part Number	Inches					Millimeters				
		L	T	H	S	Ød	L	T	H	S	Ød
100 Vdc / 63 Vac											
.10	160104*100C–F	0.512	0.157	0.374	0.394	0.031	13.0	4.0	9.5	10.0	0.8
.12	160124*100C–F	0.512	0.157	0.374	0.394	0.031	13.0	4.0	9.5	10.0	0.8
.15	160154*100C–F	0.512	0.157	0.374	0.394	0.031	13.0	4.0	9.5	10.0	0.8
.18	160184*100C–F	0.512	0.157	0.374	0.394	0.031	13.0	4.0	9.5	10.0	0.8
.22	160224*100D–F	0.512	0.197	0.433	0.394	0.031	13.0	5.0	11.0	10.0	0.8
.27	160274*100D–F	0.512	0.197	0.433	0.394	0.031	13.0	5.0	11.0	10.0	0.8
.33	160334*100E–F	0.512	0.236	0.472	0.394	0.031	13.0	6.0	12.0	10.0	0.8
.33	160334*100F–F	0.709	0.197	0.433	0.591	0.031	18.0	5.0	11.0	15.0	0.8
.39	160394*100D–F	0.512	0.197	0.433	0.394	0.031	13.0	6.0	12.0	10.0	0.8
.39	160394*100F–F	0.709	0.197	0.433	0.591	0.031	18.0	5.0	11.0	15.0	0.8
.47	160474*100E–F	0.512	0.236	0.472	0.394	0.031	13.0	6.0	12.0	10.0	0.8
.47	160474*100F–F	0.709	0.197	0.433	0.591	0.031	18.0	5.0	11.0	15.0	0.8
.56	160564*100G–F	0.709	0.236	0.472	0.591	0.031	18.0	6.0	12.0	15.0	0.8
.68	160684*100G–F	0.709	0.236	0.472	0.591	0.031	18.0	6.0	12.0	15.0	0.8
.82	160824*100H–F	0.709	0.295	0.531	0.591	0.031	18.0	7.5	13.5	15.0	0.8
1.0	160105*100H–F	0.709	0.295	0.531	0.591	0.031	18.0	7.5	13.5	15.0	0.8
1.5	160155*100M–F	1.043	0.276	0.630	0.886	0.031	26.5	7.0	16.5	22.5	0.8
2.2	160225*100N–F	1.043	0.335	0.669	0.886	0.031	26.5	8.5	17.0	22.5	0.8
3.3	160335*100O–F	1.043	0.394	0.748	0.886	0.031	26.5	10.0	19.0	22.5	0.8
4.7	160475*100P–F	1.260	0.433	0.787	1.083	0.031	32.0	11.0	20.0	27.5	0.8
6.8	160685*100Q–F	1.260	0.512	0.886	1.083	0.031	32.0	13.0	22.5	27.5	0.8
10.0	160106*100S–F	1.457	0.709	1.299	1.083	0.031	37.0	18.0	33.0	27.5	0.8
160 Vdc / 100 Vac											
.10	160104*160C–F	0.512	0.157	0.374	0.394	0.031	13.0	4.0	9.5	10.0	0.8
250 Vdc /160 Vac											
.033	160333*250C–F	0.512	0.157	0.374	0.394	0.031	13.0	4.0	9.5	10.0	0.8
.039	160393*250C–F	0.512	0.157	0.374	0.394	0.031	13.0	4.0	9.5	10.0	0.8
.047	160473*250C–F	0.512	0.157	0.374	0.394	0.031	13.0	4.0	9.5	10.0	0.8
.056	160563*250C–F	0.512	0.157	0.374	0.394	0.031	13.0	4.0	9.5	10.0	0.8
.068	160683*250C–F	0.512	0.157	0.374	0.394	0.031	13.0	4.0	9.5	10.0	0.8
.082	160823*250D–F	0.512	0.197	0.433	0.394	0.031	13.0	5.0	11.0	10.0	0.8
.10	160104*250D–F	0.512	0.197	0.433	0.394	0.031	13.0	5.0	11.0	10.0	0.8
.10	160104*250F–F	0.709	0.197	0.433	0.591	0.031	18.0	5.0	11.0	15.0	0.8
.12	160124*250D–F	0.512	0.197	0.433	0.394	0.031	13.0	6.0	12.0	10.0	0.8
.12	160124*250F–F	0.709	0.197	0.433	0.591	0.031	18.0	5.0	11.0	15.0	0.8
.15	160154*250E–F	0.512	0.236	0.472	0.394	0.031	13.0	6.0	12.0	10.0	0.8
.15	160154*250F–F	0.709	0.197	0.433	0.591	0.031	18.0	5.0	11.0	15.0	0.8
.18	160184*250E–F	0.512	0.236	0.472	0.394	0.031	13.0	6.0	12.0	10.0	0.8
.18	160184*250F–F	0.709	0.197	0.433	0.591	0.031	18.0	5.0	11.0	15.0	0.8
.22	160224*250F–F	0.709	0.197	0.433	0.591	0.031	18.0	5.0	11.0	15.0	0.8
.27	160274*250G–F	0.709	0.236	0.472	0.591	0.031	18.0	6.0	12.0	15.0	0.8
.33	160334*250G–F	0.709	0.236	0.472	0.591	0.031	18.0	6.0	12.0	15.0	0.8
.39	160394*250H–F	0.709	0.295	0.531	0.591	0.031	18.0	7.5	13.5	15.0	0.8
.47	160474*250H–F	0.709	0.295	0.531	0.591	0.031	18.0	7.5	13.5	15.0	0.8
.47	160474*250L–F	1.043	0.236	0.591	0.886	0.031	26.5	6.0	15.0	22.5	0.8
.56	160564*250I–F	0.709	0.335	0.571	0.591	0.031	18.0	8.5	14.5	15.0	0.8
.56	160564*250M–F	1.043	0.276	0.63	0.886	0.031	26.5	7.0	16.0	22.5	0.8
.68	160684*250I–F	0.709	0.335	0.571	0.591	0.031	18.0	8.5	14.5	15.0	0.8
.68	160684*250M–F	1.043	0.276	0.63	0.886	0.031	26.5	7.0	16.5	22.5	0.8
.82	160824*250M–F	1.043	0.276	0.63	0.886	0.031	26.5	8.5	17.0	22.5	0.8

* Indicates capacitance tolerance: J = ±5%, K = ±10%, M = ±20%

Type 160 Metallized Polyester Radial Lead Capacitors

RoHS Compliant

Cap (µF)	Catalog Part Number	Inches					Millimeters				
		L	T	H	S	Ød	L	T	H	S	Ød
250 Vdc / 160 Vac											
1.0	160105*250N–F	1.043	0.335	0.669	0.886	0.031	26.5	8.5	17.0	22.5	0.8
1.5	160155*250O–F	1.043	0.394	0.748	0.886	0.031	26.5	10.0	19.0	22.5	0.8
2.2	160225*250P–F	1.260	0.433	0.787	1.083	0.031	32.0	11.0	20.0	27.5	0.8
3.3	160335*250Q–F	1.260	0.512	0.886	1.083	0.031	32.0	13.0	22.5	27.5	0.8
4.7	160475*250R–F	1.260	0.591	1.181	1.083	0.031	32.0	15.0	30.0	27.5	0.8
6.8	160685*250S–F	1.457	0.709	1.299	1.083	0.031	37.0	18.0	33.0	27.5	0.8
400 Vdc / 200 Vac											
.012	160123*400C–F	0.512	0.157	0.374	0.394	0.031	13.0	4.0	9.5	10.0	0.8
.015	160153*400C–F	0.512	0.157	0.374	0.394	0.031	13.0	4.0	9.5	10.0	0.8
.018	160183*400C–F	0.512	0.157	0.374	0.394	0.031	13.0	4.0	9.5	10.0	0.8
.022	160223*400C–F	0.512	0.157	0.374	0.394	0.031	13.0	4.0	9.5	10.0	0.8
.027	160273*400C–F	0.512	0.157	0.374	0.394	0.031	13.0	4.0	9.5	10.0	0.8
.033	160333*400D–F	0.512	0.197	0.433	0.394	0.031	13.0	5.0	11.0	10.0	0.8
.039	160393*400D–F	0.512	0.197	0.433	0.394	0.031	13.0	5.0	11.0	10.0	0.8
.047	160473*400E–F	0.512	0.236	0.472	0.394	0.031	13.0	6.0	12.0	10.0	0.8
.047	160473*400F–F	0.709	0.197	0.433	0.591	0.031	18.0	5.0	11.0	15.0	0.8
.056	160563*400F–F	0.709	0.197	0.433	0.591	0.031	18.0	5.0	11.0	15.0	0.8
.068	160683*400F–F	0.709	0.197	0.433	0.591	0.031	18.0	5.0	11.0	15.0	0.8
.082	160823*400F–F	0.709	0.197	0.433	0.591	0.031	18.0	5.0	11.0	15.0	0.8
.10	160104*400G–F	0.709	0.236	0.472	0.591	0.031	18.0	6.0	12.0	15.0	0.8
.12	160124*400G–F	0.709	0.236	0.472	0.591	0.031	18.0	6.0	12.0	15.0	0.8
.15	160154*400H–F	0.709	0.295	0.531	0.591	0.031	18.0	7.5	13.5	15.0	0.8
.15	160154*400L–F	1.043	0.236	0.591	0.886	0.031	26.5	6.0	15.0	22.5	0.8
.18	160184*400L–F	1.043	0.236	0.591	0.886	0.031	26.5	6.0	15.0	22.5	0.8
.22	160224*400L–F	1.043	0.236	0.591	0.886	0.031	26.5	6.0	15.0	22.5	0.8
.27	160274*400M–F	1.043	0.276	0.630	0.886	0.031	26.5	7.0	16.5	22.5	0.8
.33	160334*400M–F	1.043	0.276	0.630	0.886	0.031	26.5	7.0	16.5	22.5	0.8
.39	160394*400N–F	1.043	0.335	0.669	0.886	0.031	26.5	8.5	17.0	22.5	0.8
.47	160474*400N–F	1.043	0.335	0.669	0.886	0.031	26.5	8.5	17.0	22.5	0.8
.56	160564*400O–F	1.043	0.394	0.748	0.886	0.031	26.5	10.0	19.0	22.5	0.8
.68	160684*400P–F	1.26	0.433	0.787	1.083	0.031	32.0	11.0	20.0	27.5	0.8
.82	160824*400P–F	1.26	0.433	0.787	1.083	0.031	32.0	11.0	20.0	27.5	0.8
1.0	160105*400P–F	1.26	0.433	0.787	1.083	0.031	32.0	11.0	20.0	27.5	0.8
1.0	160105*400Q–F	1.26	0.512	0.886	1.083	0.031	32.0	13.0	22.5	27.5	0.8
630 Vdc / 220 Vac											
.0039	160392*630C–F	0.512	0.157	0.374	0.394	0.031	13.0	4.0	9.5	10.0	0.8
.0047	160472*630C–F	0.512	0.157	0.374	0.394	0.031	13.0	4.0	9.5	10.0	0.8
.0056	160562*630C–F	0.512	0.157	0.374	0.394	0.031	13.0	4.0	9.5	10.0	0.8
.0068	160682*630C–F	0.512	0.157	0.374	0.394	0.031	13.0	4.0	9.5	10.0	0.8
.0082	160822*630C–F	0.512	0.157	0.374	0.394	0.031	13.0	4.0	9.5	10.0	0.8
.010	160103*630C–F	0.512	0.157	0.374	0.394	0.031	13.0	4.0	9.5	10.0	0.8
.012	160123*630D–F	0.512	0.197	0.433	0.394	0.031	13.0	5.0	11.0	10.0	0.8
.015	160153*630D–F	0.512	0.197	0.433	0.394	0.031	13.0	5.0	11.0	10.0	0.8
.018	160183*630D–F	0.512	0.197	0.433	0.394	0.031	13.0	5.0	11.0	10.0	0.8
.022	160223*630E–F	0.512	0.236	0.472	0.394	0.031	13.0	6.0	12.0	10.0	0.8
.027	160273*630F–F	0.709	0.197	0.433	0.591	0.031	18.0	5.0	11.0	15.0	0.8
.033	160333*630F–F	0.709	0.197	0.433	0.591	0.031	18.0	5.0	11.0	15.0	0.8
.039	160393*630G–F	0.709	0.236	0.472	0.591	0.031	18.0	6.0	12.0	15.0	0.8
.047	160473*630G–F	0.709	0.236	0.472	0.591	0.031	18.0	6.0	12.0	15.0	0.8
.056	160563*630G–F	0.709	0.236	0.472	0.591	0.031	18.0	6.0	12.0	15.0	0.8

* Indicates capacitance tolerance: J = ±5%, K = ±10%, M = ±20%

Type 160 Metallized Polyester Radial Lead Capacitors

RoHS Compliant

Cap (µF)	Catalog Part Number	Inches					Millimeters				
		L	T	H	S	Ød	L	T	H	S	Ød
630 Vac / 220 Vac											
.068	160683*630H–F	0.709	0.295	0.531	0.591	0.031	18.0	7.5	13.5	15.0	0.8
.068	160683*630L–F	1.043	0.236	0.591	0.886	0.031	26.5	6.0	15.0	22.5	0.8
.082	160823*630L–F	1.043	0.236	0.591	0.886	0.031	26.5	6.0	15.0	22.5	0.8
.10	160104*630L–F	1.043	0.236	0.591	0.886	0.031	26.5	6.0	15.0	22.5	0.8
.12	160124*630M–F	1.043	0.276	0.630	0.886	0.031	26.5	7.0	16.5	22.5	0.8
.15	160154*630M–F	1.043	0.276	0.630	0.886	0.031	26.5	7.0	16.5	22.5	0.8
.18	160184*630N–F	1.043	0.335	0.669	0.886	0.031	26.5	8.5	17.0	22.5	0.8
.22	160224*630N–F	1.043	0.335	0.669	0.886	0.031	26.5	8.5	17.0	22.5	0.8
.27	160274*630Q–F	1.26	0.512	0.886	1.083	0.031	32.0	13.0	22.5	27.5	0.8
.33	160334*630P–F	1.26	0.433	0.787	1.083	0.031	32.0	11.0	20.0	27.5	0.8
.39	160394*630P–F	1.26	0.433	0.787	1.083	0.031	32.0	11.0	20.0	27.5	0.8
.47	160474*630Q–F	1.26	0.512	0.886	1.083	0.031	32.0	13.0	22.5	27.5	0.8
1000 Vdc / 250 Vac											
.0022	160222*1000C–F	0.512	0.157	0.374	0.394	0.031	13.0	4.0	9.5	10.0	0.8
.0027	160272*1000C–F	0.512	0.157	0.374	0.394	0.031	13.0	4.0	9.5	10.0	0.8
.0033	160332*1000C–F	0.512	0.157	0.374	0.394	0.031	13.0	4.0	9.5	10.0	0.8
.0039	160392*1000D–F	0.512	0.197	0.433	0.394	0.031	13.0	5.0	11.0	10.0	0.8
.0047	160472*1000D–F	0.512	0.197	0.433	0.394	0.031	13.0	5.0	11.0	10.0	0.8
.0056	160562*1000D–F	0.512	0.197	0.433	0.394	0.031	13.0	5.0	11.0	10.0	0.8
.0068	160682*1000D–F	0.512	0.197	0.433	0.394	0.031	13.0	5.0	11.0	10.0	0.8
.0082	160822*1000D–F	0.512	0.197	0.433	0.394	0.031	13.0	5.0	11.0	10.0	0.8
.010	160103*1000F–F	0.709	0.197	0.433	0.591	0.031	18.0	5.0	11.0	15.0	0.8
.012	160123*1000F–F	0.709	0.197	0.433	0.591	0.031	18.0	5.0	11.0	15.0	0.8
.015	160153*1000F–F	0.709	0.197	0.433	0.591	0.031	18.0	6.0	12.0	15.0	0.8
.018	160183*1000G–F	0.709	0.236	0.472	0.591	0.031	18.0	6.0	12.0	15.0	0.8
.022	160223*1000G–F	0.709	0.236	0.472	0.591	0.031	18.0	6.0	12.0	15.0	0.8
.027	160273*1000H–F	0.709	0.295	0.531	0.591	0.031	18.0	7.5	13.5	15.0	0.8
.033	160333*1000L–F	1.043	0.236	0.591	0.886	0.031	26.5	6.0	15.0	22.5	0.8
.039	160393*1000L–F	1.043	0.236	0.591	0.886	0.031	26.5	6.0	15.0	22.5	0.8
.047	160473*1000L–F	1.043	0.236	0.591	0.886	0.031	26.5	6.0	15.0	22.5	0.8
.056	160563*1000M–F	1.043	0.276	0.630	0.886	0.031	26.5	7.0	16.5	22.5	0.8
.068	160683*1000M–F	1.043	0.276	0.630	0.886	0.031	26.5	7.0	16.5	22.5	0.8
.082	160823*1000N–F	1.043	0.335	0.669	0.886	0.031	26.5	8.5	17.0	22.5	0.8
.10	160104*1000N–F	1.043	0.335	0.669	0.886	0.031	26.5	8.5	17.0	22.5	0.8
.12	160124*1000O–F	1.043	0.394	0.748	0.886	0.031	26.5	10.0	19.0	22.5	0.8
.15	160154*1000P–F	1.26	0.433	0.787	1.083	0.031	32.0	11.0	20.0	27.5	0.8
.18	160184*1000Q–F	1.26	0.512	0.886	1.083	0.031	32.0	13.0	22.5	27.5	0.8
.22	160224*1000Q–F	1.26	0.512	0.886	1.083	0.031	32.0	13.0	22.5	27.5	0.8

* Indicates capacitance tolerance: J = ±5%, K = ±10%, M = ±20%

Part Numbering System

160	104	K	100	C
Series	Capacitance	Tolerance	Voltage	Case Code
160	392 = .0039 µF	J = ±5%	100 = 100 Vdc	C
	103 = .01 µF	K = ±10%	250 = 250 Vdc	D
	104 = .1 µF	M = ±20%	630 = 630 Vdc	E
	105 = 1.0 µF		1000 = 1000 Vdc	F
				etc.

О компании

ООО "ТрейдЭлектроникс" - это оперативные поставки широкого спектра электронных компонентов отечественного и импортного производства напрямую от производителей и с крупнейших мировых складов. Реализуемая нашей компанией продукция насчитывает более полумиллиона наименований.

Благодаря этому наша компания предлагает к поставке практически не ограниченный ассортимент компонентов как оптовыми, мелкооптовыми партиями, так и в розницу.

Наличие собственной эффективной системы логистики обеспечивает надежную поставку продукции по конкурентным ценам в точно указанные сроки.

Срок поставки со стоков в **Европе и Америке – от 3 до 14 дней.**

Срок поставки из **Азии – от 10 дней.**

Благодаря развитой сети поставщиков, помогаем в поиске и приобретении экзотичных или снятых с производства компонентов.

Предоставляем спец цены на элементы для создания инженерных сэмплов.

Упорный труд, качественный результат дают нам право быть уверенными в себе и надежными для наших клиентов.

Наша компания это:

- Гарантия качества поставляемой продукции
- Широкий ассортимент
- Минимальные сроки поставок
- Техническая поддержка
- Подбор комплектации
- Индивидуальный подход
- Гибкое ценообразование

Наша организация особенно сильна в поставках модулей, микросхем, пассивных компонентов, ксайленсах (XC), EPF, EPM и силовой электроники.

Большой выбор предлагаемой продукции, различные виды оплаты и доставки, позволят Вам сэкономить время и получить максимум выгоды от сотрудничества с нами!

Trade Electronics.ru

гарантия бесперебойности производства и качества выпускаемой продукции

Перечень производителей, продукцию которых мы поставляем на российский рынок

AMD
ANALOG DEVICES
BOURNS
Coilcraft
élantec Semiconductor, Inc.
HARRIS
Infineon
JRC
MICREL
MOTOROLA
nichicon
PHILIPS
ROHM
SGS-THOMSON
Sipex
TAIYO YUDEN
TOKO
ZILOG
Winbond
Allegro
ATMEL
BURR - BROWN
EXAR
HITACHI
intel
Lattice
muRata
OKI
QUALCOMM
SAMSUNG
SHARP
SONY
TDK
TOSHIBA
KYOCERA
ALTERA
AVX
CITILYST
CYPRESS
FAIRCHILD SEMICONDUCTOR
HOLTEK
International IOR Rectifier
LINEAR TECHNOLOGY
MITSUBISHI
National Semiconductor
ON Semiconductor
REALTEK
SANYO
SHINDENGEN
SGS
TECCOR
TUNDRA
XILINX
Amphenol
Bay Linear
CIRRUS LOGIC
DALLAS
FUJITSU
IDT
intersil
MAXIM
molex
NEC
Panasonic
RENESAS
SII
SIEMENS
ST
Texas Instruments
VISHAY
ZETEX SEMICONDUCTORS

Trade Electronics.ru

гарантия бесперебойности производства и качества выпускаемой продукции

С удовольствием будем прорабатывать для Вас поставки всех необходимых компонентов по текущим запросам для скорейшего выявления групп элементов, по которым сотрудничество именно с нашей компанией будет для Вас максимально выгодным!

С уважением,

Менеджер отдела продаж ООО

«Трейд Электроникс»

Шишлаков Евгений

8 (495)668-30-28 доб 169

manager28@tradeelectronics.ru

http://www.tradeelectronics.ru/