# AC and Pulse Metallized Polypropylene Film Capacitors
# MKP Radial Potted Type

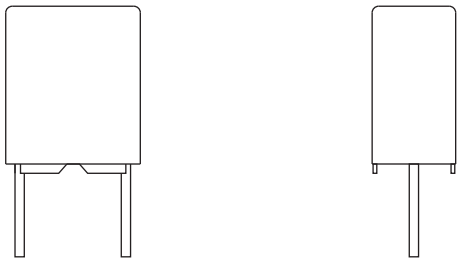

## FEATURES

- 5 mm pitch
- Material categorization:
  for definitions of compliance please see www.vishay.com/doc?99912

Pb-free
RoHS COMPLIANT
HALOGEN FREE
GREEN (5-2008)

## APPLICATIONS

Low losses due to low contact resistance and low loss dielectric make these products suitable for applications where high currents at high frequency occur or high stability is preferred.

| QUICK REFERENCE DATA | |
|---|---|
| Capacitance range (E24 series) | 0.0022 µF to 0.1 µF |
| Capacitance tolerance | ± 10 %, ± 5 % |
| Climatic category | 55/085/56 |
| Maximum application temperature | 85 °C |
| Reference specifications | IEC 60384-17 |
| Dielectric | Polypropylene film |
| Electrodes | Metallized film |
| Construction | Wound mono construction |
| Encapsulation | Flame retardant plastic case and epoxy resin<br>UL-class 94 V-0 |
| Leads | Tinned wire |
| Marking | C-value; tolerance; rated voltage; manufacturer's type designation;<br>code for dielectric material; manufacturer's emblem; code for factory of origin;<br>year and week of manufacture |
| Rated DC voltage | 100 $V_{DC}$; 160 $V_{DC}$; 250 $V_{DC}$; 400 $V_{DC}$; 630 $V_{DC}$ |
| Rated AC voltage | 63 $V_{AC}$; 100 $V_{AC}$; 160 $V_{AC}$; 200 $V_{AC}$ |
| Rated peak-to-peak voltage | 180 V; 280 V; 450 V; 560 V |
| Rated temperature | 85 °C |
| Performance grade | Grade 1 (long life) |
| Stability grade | Grade 2 |

**Note**

- For more detailed data and test requirements contact: dc-film@vishay.com


For technical questions, contact: dc-film@vishay.com
THIS DOCUMENT IS SUBJECT TO CHANGE WITHOUT NOTICE. THE PRODUCTS DESCRIBED HEREIN AND THIS DOCUMENT ARE SUBJECT TO SPECIFIC DISCLAIMERS, SET FORTH AT www.vishay.com/doc?91000

**DIMENSIONS** in millimeters

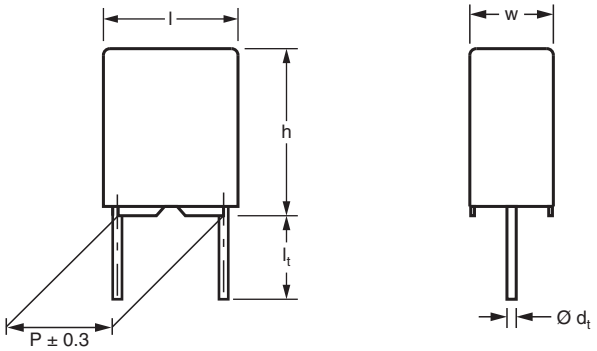


## COMPOSITION OF CATALOG NUMBER

| TYPE AND PITCHES | |
|---|---|
| 380 | 5.0 mm |

| CAPACITANCE (numerically) |
|---|

| MULTIPLIER (nF) | |
|---|---|
| 0.1 | 2 |
| 1 | 3 |
| 10 | 4 |

| Example: |
|---|
| 104 = 10 x 10 = 100 nF |

| | | | | |
|---|---|---|---|---|
| 2222* | 380 | XX | XX | X |
| BFC2 | 380 | XX | XX | X |

* Old ordering code

| TYPE | PACKAGING | LEAD CONFIGURATION | PREFERRED TYPES | | | | | |
|---|---|---|---|---|---|---|---|---|
| | | | C-TOL. | 100 V | 160 V | 250 V | 400 V | 630 V |
| 380 | Ammopack | H = 18.5 mm; $P_0$ = 12.7 mm | ± 10 % | 25 | 35 | 45 | 55 | 65 |
| **TYPE** | **PACKAGING** | **LEAD CONFIGURATION** | **ON REQUEST** | | | | | |
| 380 | Ammopack | H = 18.5 mm; $P_0$ = 12.7 mm | ± 5 % | 26 | 36 | 46 | 56 | 66 |
| | Loose in box | Lead length 4.0 mm + 1.0 mm / - 0.5 mm | ± 10 % | 21 | 31 | 41 | 51 | 61 |
| | | | ± 5 % | 22 | 32 | 42 | 52 | 62 |


For technical questions, contact: dc-film@vishay.com
THIS DOCUMENT IS SUBJECT TO CHANGE WITHOUT NOTICE. THE PRODUCTS DESCRIBED HEREIN AND THIS DOCUMENT ARE SUBJECT TO SPECIFIC DISCLAIMERS, SET FORTH AT www.vishay.com/doc?91000

| SPECIFIC REFERENCE DATA - 100 $V_{DC}$ | | |
|---|---|---|
| DESCRIPTION | VALUE | |
| Tangent of loss angle: | at 10 kHz | at 100 kHz |
| 0.018 µF ≤ C ≤ 0.027 µF | ≤ 10 x $10^{-4}$ | ≤ 15 x $10^{-4}$ |
| 0.027 µF < C ≤ 0.075 µF | ≤ 10 x $10^{-4}$ | ≤ 20 x $10^{-4}$ |
| 0.075 µF < C ≤ 0.1 µF | ≤ 10 x $10^{-4}$ | ≤ 25 x $10^{-4}$ |
| Rated voltage pulse slope $(dU/dt)_R$ at 100 V (DC) | 80 V/µs | |
| R between leads for C ≤ 1.0 µF at 100 V; 1 min | > 100 000 MΩ | |
| R between interconnected leads and case; 100 V; 1 min | > 100 000 MΩ | |
| Withstanding (DC) voltage (cut off current 10 mA) [1]; rise time 1000 V/s | 160 V; 1 min | |
| Withstanding (DC) voltage between leads and case | 2840 V; 1 min | |

**Note**

[1] See "Voltage Proof Test for Metalized Film Capacitors": www.vishay.com/doc?28169

| ELECTRICAL DATA AND ORDERING CODE | | | | | | |
|---|---|---|---|---|---|---|
| $U_{RDC}$ (V) | CAP. (µF) | DIMENSIONS w x h x l (mm) | MASS [2] (g) | CATALOG NUMBER BFC2 380 ..... AND PACKAGING | | |
| | | | | AMMOPACK [1] | | LOOSE IN BOX |
| | | | | H = 18.5 mm, $P_0$ = 12.7 mm | | $l_t$ = 4.0 mm + 1.0 mm / - 0.5 mm |
| | | | | C-TOL. = ± 10 % | SPQ | SPQ |
| | | | | LAST 5 DIGITS OF CATALOG NUMBER | | |
| 100 | PITCH = 5.0 mm ± 0.3 mm; $d_t$ = 0.50 mm ± 0.05 mm; $U_{RAC}$ = 63 V; $U_{p-p}$ = 180 V | | | | | |
| | 0.018 | 3.5 x 8.0 x 7.2 | 0.30 | 25183 | 1500 | 2000 |
| | 0.020 | | | 25203 | | |
| | 0.022 | | | 25223 | | |
| | 0.024 | | | 25243 | | |
| | 0.027 | | | 25273 | | |
| | 0.030 | | | 25303 | | |
| | 0.033 | | | 25333 | | |
| | 0.036 | | | 25363 | 1000 | |
| | 0.039 | | | 25393 | | |
| | 0.043 | | | 25433 | | |
| | 0.047 | | | 25473 | | |
| | 0.051 | 4.5 x 9.0 x 7.2 | 0.42 | 25513 | 750 | |
| | 0.056 | | | 25563 | | |
| | 0.062 | | | 25623 | | |
| | 0.068 | | | 25683 | | |
| | 0.075 | 6.0 x 11.0 x 7.2 | 0.64 | 25753 | | |
| | 0.082 | | | 25823 | | |
| | 0.091 | | | 25913 | | |
| | 0.100 | | | 25104 | | |

**Notes**

[1] H = in-tape height; $P_0$ = sprocket hole distance; for detailed specifications refer to packaging information

[2] Weight for short lead product only

- SPQ = Standard Packing Quantity



For technical questions, contact: dc-film@vishay.com

THIS DOCUMENT IS SUBJECT TO CHANGE WITHOUT NOTICE. THE PRODUCTS DESCRIBED HEREIN AND THIS DOCUMENT ARE SUBJECT TO SPECIFIC DISCLAIMERS, SET FORTH AT www.vishay.com/doc?91000

| SPECIFIC REFERENCE DATA - 160 $V_{DC}$ | | |
|---|---|---|
| **DESCRIPTION** | **VALUE** | |
| Tangent of loss angle: | at 10 kHz | at 100 kHz |
| 0.013 µF ≤ C ≤ 0.027 µF | ≤ 10 x $10^{-4}$ | ≤ 15 x $10^{-4}$ |
| 0.027 µF < C ≤ 0.068 µF | ≤ 10 x $10^{-4}$ | ≤ 20 x $10^{-4}$ |
| Rated voltage pulse slope $(dU/dt)_R$ at 160 V (DC) | 80 V/µs | |
| R between leads for C ≤ 1.0 µF at 100 V; 1 min | > 100 000 MΩ | |
| R between interconnected leads and case; 100 V; 1 min | > 100 000 MΩ | |
| Withstanding (DC) voltage (cut off current 10 mA) [1]; rise time 1000 V/s | 256 V; 1 min | |
| Withstanding (DC) voltage between leads and case | 2840 V; 1 min | |

**Note**

[1] See "Voltage Proof Test for Metalized Film Capacitors": www.vishay.com/doc?28169

| ELECTRICAL DATA AND ORDERING CODE | | | | | | |
|---|---|---|---|---|---|---|
| $U_{RDC}$ (V) | CAP. (µF) | DIMENSIONS w x h x l (mm) | MASS [2] (g) | CATALOG NUMBER BFC2 380 ..... AND PACKAGING | | |
| | | | | AMMOPACK [1] | | LOOSE IN BOX |
| | | | | H = 18.5 mm, $P_0$ = 12.7 mm | | $l_t$ = 4.0 mm + 1.0 mm / - 0.5 mm |
| | | | | C-TOL. = ± 10 % | | |
| | | | | LAST 5 DIGITS OF CATALOG NUMBER | SPQ | SPQ |
| | PITCH = 5.0 mm ± 0.3 mm; $d_t$ = 0.50 mm ± 0.05 mm; $U_{RAC}$ = 100 V; $U_{p-p}$ = 280 V | | | | | |
| 160 | 0.013 | 3.5 x 8.0 x 7.2 | 0.30 | 35133 | 1500 | 2000 |
| | 0.015 | | | 35153 | | |
| | 0.016 | | | 35163 | | |
| | 0.018 | | | 35183 | | |
| | 0.020 | | | 35203 | | |
| | 0.022 | | | 35223 | | |
| | 0.024 | | | 35243 | 1000 | |
| | 0.027 | | | 35273 | | |
| | 0.030 | | | 35303 | | |
| | 0.033 | | | 35333 | | |
| | 0.036 | | | 35363 | 750 | |
| | 0.039 | | | 35393 | | |
| | 0.043 | | | 35433 | | |
| | 0.047 | | | 35473 | | |
| | 0.051 | 4.5 x 9.0 x 7.2 | 0.42 | 35513 | 750 | 2000 |
| | 0.056 | | | 35563 | | |
| | 0.062 | | | 35623 | | |
| | 0.068 | | | 35683 | | |

**Notes**

[1] H = in-tape height; $P_0$ = sprocket hole distance; for detailed specifications refer to packaging information

[2] Weight for short lead product only

- SPQ = Standard Packing Quantity



For technical questions, contact: dc-film@vishay.com

THIS DOCUMENT IS SUBJECT TO CHANGE WITHOUT NOTICE. THE PRODUCTS DESCRIBED HEREIN AND THIS DOCUMENT ARE SUBJECT TO SPECIFIC DISCLAIMERS, SET FORTH AT www.vishay.com/doc?91000

| SPECIFIC REFERENCE DATA - 250 $V_{DC}$ | | |
|---|---|---|
| **DESCRIPTION** | **VALUE** | |
| Tangent of loss angle: | at 10 kHz | at 100 kHz |
| 0.0091 µF ≤ C ≤ 0.027 µF | ≤ 10 x $10^{-4}$ | ≤ 15 x $10^{-4}$ |
| 0.027 µF < C ≤ 0.043 µF | ≤ 10 x $10^{-4}$ | ≤ 20 x $10^{-4}$ |
| Rated voltage pulse slope $(dU/dt)_R$ at 250 V (DC) | 90 V/µs | |
| R between leads for C ≤ 1.0 µF at 100 V; 1 min | > 100 000 MΩ | |
| R between interconnected leads and case; 100 V; 1 min | > 100 000 MΩ | |
| Withstanding (DC) voltage (cut off current 10 mA) [1]; rise time 100 V/s | 400 V; 1 min | |
| Withstanding (DC) voltage between leads and case | 2840 V; 1 min | |

**Note**

[1] See "Voltage Proof Test for Metalized Film Capacitors": www.vishay.com/doc?28169

| ELECTRICAL DATA AND ORDERING CODE | | | | | | |
|---|---|---|---|---|---|---|
| $U_{RDC}$ (V) | CAP. (µF) | DIMENSIONS w x h x l (mm) | MASS [2] (g) | CATALOG NUMBER BFC2 380 ..... AND PACKAGING | | |
| | | | | AMMOPACK [1] | | LOOSE IN BOX |
| | | | | H = 18.5 mm, $P_0$ = 12.7 mm | | $l_t$ = 4.0 mm + 1.0 mm / - 0.5 mm |
| | | | | C-TOL. = ± 10 % | SPQ | SPQ |
| | | | | LAST 5 DIGITS OF CATALOG NUMBER | | |
| 250 | PITCH = 5.0 mm ± 0.3 mm; $d_t$ = 0.50 mm ± 0.05 mm; $U_{RAC}$ = 160 V; $U_{p-p}$ = 450 V | | | | | |
| | 0.0091 | 3.5 x 8.0 x 7.2 | 0.30 | 45912 | 1500 | 2000 |
| | 0.010 | | | 45103 | | |
| | 0.011 | | | 45113 | | |
| | 0.012 | | | 45123 | | |
| | 0.013 | | | 45133 | | |
| | 0.015 | | | 45153 | | |
| | 0.016 | | | 45163 | 1000 | 2000 |
| | 0.018 | | | 45183 | | |
| | 0.020 | | | 45203 | | |
| | 0.022 | | | 45223 | | |
| | 0.024 | | | 45243 | | |
| | 0.027 | | | 45273 | 750 | 2000 |
| | 0.030 | | | 45303 | | |
| | 0.033 | | | 45333 | | |
| | 0.036 | | | 45363 | | |
| | 0.039 | | | 45393 | | |
| | 0.043 | 4.5 x 9.0 x 7.2 | 0.42 | 45433 | 750 | 2000 |

**Notes**

[1] H = in-tape height; $P_0$ = sprocket hole distance; for detailed specifications refer to packaging information

[2] Weight for short lead product only

- SPQ = Standard Packing Quantity



For technical questions, contact: dc-film@vishay.com

THIS DOCUMENT IS SUBJECT TO CHANGE WITHOUT NOTICE. THE PRODUCTS DESCRIBED HEREIN AND THIS DOCUMENT ARE SUBJECT TO SPECIFIC DISCLAIMERS, SET FORTH AT www.vishay.com/doc?91000

| SPECIFIC REFERENCE DATA - 400 $V_{DC}$ | | |
|---|---|---|
| DESCRIPTION | VALUE | |
| Tangent of loss angle: | at 10 kHz | at 100 kHz |
| 0.0043 µF ≤ C ≤ 0.0091 µF | ≤ 10 x $10^{-4}$ | ≤ 15 x $10^{-4}$ |
| 0.0091 µF < C ≤ 0.02 µF | ≤ 10 x $10^{-4}$ | ≤ 20 x $10^{-4}$ |
| Rated voltage pulse slope $(dU/dt)_R$ at 400 V (DC) | 100 V/µs | |
| R between leads for C ≤ 1.0 µF at 100 V; 1 min | > 100 000 MΩ | |
| R between interconnected leads and case; 100 V; 1 min | > 100 000 MΩ | |
| Withstanding (DC) voltage (cut off current 10 mA) [1]; rise time 100 V/s | 640 V; 1 min | |
| Withstanding (DC) voltage between leads and case | 2840 V; 1 min | |

**Note**

[1] See "Voltage Proof Test for Metalized Film Capacitors": www.vishay.com/doc?28169

| ELECTRICAL DATA AND ORDERING CODE | | | | | | |
|---|---|---|---|---|---|---|
| $U_{RDC}$ (V) | CAP. (µF) | DIMENSIONS w x h x l (mm) | MASS [2] (g) | CATALOG NUMBER BFC2 380 ..... AND PACKAGING | | |
| | | | | AMMOPACK [1] | | LOOSE IN BOX |
| | | | | H = 18.5 mm, $P_0$ = 12.7 mm | | $l_t$ = 4.0 mm + 1.0 mm / - 0.5 mm |
| | | | | C-TOL. = ± 10 % | SPQ | SPQ |
| | | | | LAST 5 DIGITS OF CATALOG NUMBER | | |
| 400 | PITCH = 5.0 mm ± 0.3 mm; $d_t$ = 0.50 mm ± 0.05 mm; $U_{RAC}$ = 200 V; $U_{p-p}$ = 560 V | | | | | |
| | 0.0043 | 3.5 x 8.0 x 7.2 | 0.30 | 55432 | 1500 | 2000 |
| | 0.0047 | | | 55472 | | |
| | 0.0051 | | | 55512 | | |
| | 0.0056 | | | 55562 | | |
| | 0.0062 | | | 55622 | | |
| | 0.0068 | | | 55682 | | |
| | 0.0075 | | | 55752 | | |
| | 0.0082 | | | 55822 | | |
| | 0.0091 | | | 55912 | 1000 | |
| | 0.010 | | | 55103 | | |
| | 0.011 | | | 55113 | | |
| | 0.012 | | | 55123 | | |
| | 0.013 | 4.5 x 9.0 x 7.2 | 0.42 | 55133 | 750 | |
| | 0.015 | | | 55153 | | |
| | 0.016 | | | 55163 | | |
| | 0.018 | | | 55183 | | |
| | 0.020 | 6.0 x 11.0 x 7.2 | 0.64 | 55203 | | |

**Notes**

[1] H = in-tape height; $P_0$ = sprocket hole distance; for detailed specifications refer to packaging information

[2] Weight for short lead product only

- SPQ = Standard Packing Quantity



For technical questions, contact: dc-film@vishay.com

THIS DOCUMENT IS SUBJECT TO CHANGE WITHOUT NOTICE. THE PRODUCTS DESCRIBED HEREIN AND THIS DOCUMENT ARE SUBJECT TO SPECIFIC DISCLAIMERS, SET FORTH AT www.vishay.com/doc?91000

| SPECIFIC REFERENCE DATA - 630 $V_{DC}$ | | |
|---|---|---|
| DESCRIPTION | VALUE | |
| Tangent of loss angle: | at 10 kHz | at 100 kHz |
| 0.0015 µF ≤ C ≤ 0.0091 µF | ≤ 10 x $10^{-4}$ | ≤ 15 x $10^{-4}$ |
| 0.0091 µF < C ≤ 0.01 µF | ≤ 10 x $10^{-4}$ | ≤ 15 x $10^{-4}$ |
| Rated voltage pulse slope $(dU/dt)_R$ at 630 V (DC) | 120 V/µs | |
| R between leads for C ≤ 1.0 µF at 500 V; 1 min | > 100 000 MΩ | |
| R between interconnected leads and case; 500 V; 1 min | > 100 000 MΩ | |
| Withstanding (DC) voltage (cut off current 10 mA) [1]; rise time 1000 V/s | 880 V; 1 min | |
| Withstanding (DC) voltage between leads and case | 2840 V; 1 min | |

**Note**

[1] See "Voltage Proof Test for Metalized Film Capacitors": www.vishay.com/doc?28169

**ELECTRICAL DATA AND ORDERING CODE**

| $U_{RDC}$ (V) | CAP. (µF) | DIMENSIONS w x h x l (mm) | MASS [2] (g) | CATALOG NUMBER BFC2 380 ..... AND PACKAGING | | |
|---|---|---|---|---|---|---|
| | | | | AMMOPACK [1] | | LOOSE IN BOX |
| | | | | H = 18.5 mm, $P_0$ = 12.7 mm | | $l_t$ = 4.0 mm + 1.0 mm / - 0.5 mm |
| | | | | C-TOL. = ± 10 % | | |
| | | | | LAST 5 DIGITS OF CATALOG NUMBER | SPQ | SPQ |
| 630 | PITCH = 5.0 ± 0.3 mm; $d_t$ = 0.50 ± 0.05 mm; $U_{RAC}$ = 200 V; $U_{p-p}$ = 560 V | | | | | |
| | 0.0022 | 3.5 x 8.0 x 7.2 | 0.30 | 65222 | 1500 | 2000 |
| | 0.0024 | | | 65242 | | |
| | 0.0027 | | | 65272 | | |
| | 0.0030 | | | 65302 | | |
| | 0.0033 | | | 65332 | | |
| | 0.0036 | | | 65362 | | |
| | 0.0039 | | | 65392 | | |
| | 0.0043 | | | 65432 | 1000 | |
| | 0.0047 | | | 65472 | | |
| | 0.0051 | | | 65512 | | |
| | 0.0056 | | | 65562 | | |
| | 0.0062 | | | 65622 | 750 | |
| | 0.0068 | | | 65682 | | |
| | 0.0075 | 4.5 x 9.0 x 7.2 | 0.42 | 65752 | | |
| | 0.0082 | | | 65822 | | |
| | 0.0091 | | | 65912 | | |
| | 0.010 | | | 65103 | | |

**Notes**

[1] H = in-tape height; $P_0$ = sprocket hole distance; for detailed specifications refer to packaging information

[2] Weight for short lead product only

- SPQ = Standard Packing Quantity



For technical questions, contact: dc-film@vishay.com

THIS DOCUMENT IS SUBJECT TO CHANGE WITHOUT NOTICE. THE PRODUCTS DESCRIBED HEREIN AND THIS DOCUMENT ARE SUBJECT TO SPECIFIC DISCLAIMERS, SET FORTH AT www.vishay.com/doc?91000

# Disclaimer

ALL PRODUCT, PRODUCT SPECIFICATIONS AND DATA ARE SUBJECT TO CHANGE WITHOUT NOTICE TO IMPROVE RELIABILITY, FUNCTION OR DESIGN OR OTHERWISE.

Vishay Intertechnology, Inc., its affiliates, agents, and employees, and all persons acting on its or their behalf (collectively, "Vishay"), disclaim any and all liability for any errors, inaccuracies or incompleteness contained in any datasheet or in any other disclosure relating to any product.

Vishay makes no warranty, representation or guarantee regarding the suitability of the products for any particular purpose or the continuing production of any product. To the maximum extent permitted by applicable law, Vishay disclaims (i) any and all liability arising out of the application or use of any product, (ii) any and all liability, including without limitation special, consequential or incidental damages, and (iii) any and all implied warranties, including warranties of fitness for particular purpose, non-infringement and merchantability.

Statements regarding the suitability of products for certain types of applications are based on Vishay's knowledge of typical requirements that are often placed on Vishay products in generic applications. Such statements are not binding statements about the suitability of products for a particular application. It is the customer's responsibility to validate that a particular product with the properties described in the product specification is suitable for use in a particular application. Parameters provided in datasheets and/or specifications may vary in different applications and performance may vary over time. All operating parameters, including typical parameters, must be validated for each customer application by the customer's technical experts. Product specifications do not expand or otherwise modify Vishay's terms and conditions of purchase, including but not limited to the warranty expressed therein.

Except as expressly indicated in writing, Vishay products are not designed for use in medical, life-saving, or life-sustaining applications or for any other application in which the failure of the Vishay product could result in personal injury or death. Customers using or selling Vishay products not expressly indicated for use in such applications do so at their own risk. Please contact authorized Vishay personnel to obtain written terms and conditions regarding products designed for such applications.

No license, express or implied, by estoppel or otherwise, to any intellectual property rights is granted by this document or by any conduct of Vishay. Product names and markings noted herein may be trademarks of their respective owners.

# Material Category Policy

**Vishay Intertechnology, Inc. hereby certifies that all its products that are identified as RoHS-Compliant fulfill the definitions and restrictions defined under Directive 2011/65/EU of The European Parliament and of the Council of June 8, 2011 on the restriction of the use of certain hazardous substances in electrical and electronic equipment (EEE) - recast, unless otherwise specified as non-compliant.**

**Please note that some Vishay documentation may still make reference to RoHS Directive 2002/95/EC. We confirm that all the products identified as being compliant to Directive 2002/95/EC conform to Directive 2011/65/EU.**

**Vishay Intertechnology, Inc. hereby certifies that all its products that are identified as Halogen-Free follow Halogen-Free requirements as per JEDEC JS709A standards. Please note that some Vishay documentation may still make reference to the IEC 61249-2-21 definition. We confirm that all the products identified as being compliant to IEC 61249-2-21 conform to JEDEC JS709A standards.**

## О компании

ООО "ТрейдЭлектроникс" - это оперативные поставки широкого спектра электронных компонентов отечественного и импортного производства напрямую от производителей и с крупнейших мировых складов. Реализуемая нашей компанией продукция насчитывает более полумиллиона наименований.

Благодаря этому наша компания предлагает к поставке практически не ограниченный ассортимент компонентов как оптовыми, мелкооптовыми партиями, так и в розницу.

Наличие собственной эффективной системы логистики обеспечивает надежную поставку продукции по конкурентным ценам в точно указанные сроки.

Срок поставки со стоков в **Европе и Америке – от 3 до 14 дней.**

Срок поставки из **Азии – от 10 дней.**

Благодаря развитой сети поставщиков, помогаем в поиске и приобретении экзотичных или снятых с производства компонентов.

Предоставляем спец цены на элементы для создания инженерных сэмплов.

**Упорный труд, качественный результат дают нам право быть уверенными в себе и надежными для наших клиентов.**

## Наша компания это:

- Гарантия качества поставляемой продукции
- Широкий ассортимент
- Минимальные сроки поставок
- Техническая поддержка
- Подбор комплектации
- Индивидуальный подход
- Гибкое ценообразование

Наша организация особенно сильна в поставках модулей, микросхем, пассивных компонентов, ксайленсах (XC), EPF, EPM и силовой электроники.

Большой выбор предлагаемой продукции, различные виды оплаты и доставки, позволят Вам сэкономить время и получить максимум выгоды от сотрудничества с нами!

Trade Electronics.ru

гарантия бесперебойности производства и качества выпускаемой продукции

**Перечень производителей, продукцию которых мы поставляем на российский рынок**

AMD
ANALOG DEVICES
BOURNS
Coilcraft
élantec Semiconductor, Inc.
HARRIS
Infineon
JRC
MICREL
MOTOROLA
nichicon
PHILIPS
ROHM
SGS-THOMSON
Sipex
TAIYO YUDEN
TOKO
ZILOG
Winbond
Allegro
ATMEL
BURR - BROWN
EXAR
HITACHI
intel
Lattice
muRata
OKI
QUALCOMM
SAMSUNG
SHARP
SONY
TDK
TOSHIBA
KYOCERA
ALTERA
AVX
CITILYST
CYPRESS
FAIRCHILD SEMICONDUCTOR
HOLTEK
International IOR Rectifier
LINEAR TECHNOLOGY
MITSUBISHI
National Semiconductor
ON Semiconductor
REALTEK
SANYO
SHINDENGEN
SGS
TECCOR
TUNDRA
XILINX
Amphenol
Bay Linear
CIRRUS LOGIC
DALLAS
FUJITSU
IDT
intersil
MAXIM
molex
NEC
Panasonic
RENESAS
SII
SIEMENS
ST
Texas Instruments
VISHAY
ZETEX SEMICONDUCTORS

Trade Electronics.ru

гарантия бесперебойности производства и качества выпускаемой продукции

С удовольствием будем прорабатывать для Вас поставки всех необходимых компонентов по текущим запросам для скорейшего выявления групп элементов, по которым сотрудничество именно с нашей компанией будет для Вас максимально выгодным!

С уважением,

Менеджер отдела продаж ООО

«Трейд Электроникс»

Шишлаков Евгений

8 (495)668-30-28 доб 169

manager28@tradeelectronics.ru

http://www.tradeelectronics.ru/