POWER COMBICON Plugs and Headers PC 6/… for Currents up to 41 A, 10.16 mm Pitch

The PC 6 plug connector features highly conductive metal alloys to offer a current carrying capacity of 41 A at a rated voltage of 1000 V. A double steel spring on the female side offers additional contact reliability especially in the case of extreme fluctuations of power or temperature.
The plugs are also available with a screw flange for vibration-proof connection to the headers, with 2 to 8 positions.
The plugs and headers are coded with the CP-HCC 4. coding profile. The self-adhesive marker cards SK 10/5 are used for labeling (see COMBICON catalog).

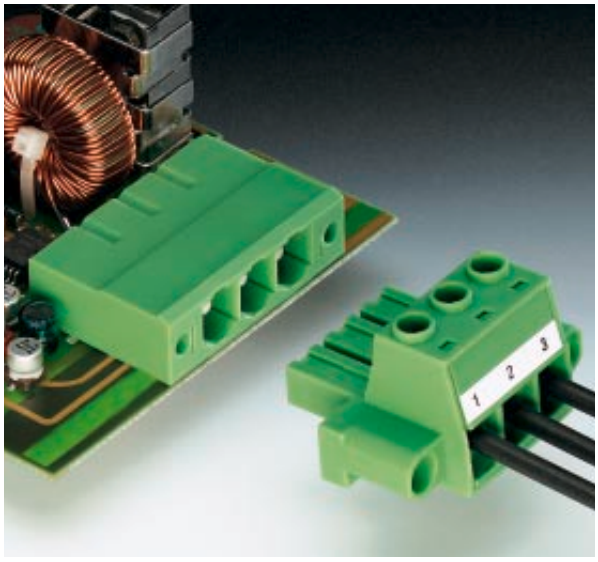

Phoenix Contact GmbH & Co. KG • 32823 Blomberg, Germany
Phone +49 52 35 3-00 • Fax +49 52 35 3-4 12 00 • www.phoenixcontact.com

PC 6/…-ST-10,16
10.16 mm Pitch

Note:
COMBICON plug connectors may only be actuated in the no-load condition. If smaller loads need to be switched for operational reasons, experimental values are available on request.

Description	No. of positions	Dim. a [mm]	Type	Order No.	Pcs./Pkt.
POWER COMBICON plugs, 10.16 mm pitch, color: green	2	10.16	**PC 6/2-ST-10,16**	**19 13 50 7**	50
	3	20.32	**PC 6/3-ST-10,16**	**19 13 51 0**	
	4	30.48	**PC 6/4-ST-10,16**	**19 13 52 3**	
	5	40.64	**PC 6/5-ST-10,16**	**19 13 53 6**	
	6	50.80	**PC 6/6-ST-10,16**	**19 13 54 9**	
	7	60.96	**PC 6/7-ST-10,16**	**19 13 55 2**	
	8	71.12	**PC 6/8-ST-10,16**	**19 13 56 5**	
(1) **Coding profile,** is inserted into the recess on the plug and header, insulating material: red			**CP-HCC 4**	**16 00 02 7**	100
(2) **Marker card,** with 10 pcs. 10-section marker strips, white, self-adhesive, for 100 terminal blocks			**SK 10/5** (see COMBICON catalog)		
(3) **Screwdriver**, blade: 1.0 x 4.0 x 100 mm, length: 200 mm			**SZS 1,0 x 4,0**	**12 05 06 6**	10

Technical data					
Dimensions		see description			
Pitch	[mm]	10.16			
Hole diameter	[mm|	–			
Pin dimensions	[mm]x[mm]	–			
Technical data in accordance with IEC/ DIN VDE					
Insulating material group	–	I			
Surge voltage category / contamination class	–/–	III / 3	III / 2	II / 2	
Rated voltage	[V]	1000	1000	1000	
Rated surge voltage	[kV]	8	8	8	
Nominal current / cross section	[A]/[mm²]	41 / 6.0			
Maximum load current / cross section	[A]/[mm²]	41 / 6.0			
Connection capacity					
Solid / stranded / conductor sizes	[mm²]/[mm²]/AWG	0.5 - 10.0 / 0.5 - 6.0 / 20 - 7			
Stranded with ferrule without / with plastic sleeve	[mm²]	0.5 - 6.0 / 0.5 -6.0			
Multiple connection (2 conductors with same cross section)					
Solid / stranded	[mm²]	0.5 - 6.0 / 0.5 - 6.0			
Stranded with ferrule with plastic sleeve	[mm²]	0.5 - 2.5			
Stranded with TWIN ferrule with plastic sleeve	[mm²]	0.5 - 4.0			
Stripping length	[mm]	12			
Internal cylindrical gauge (IEC 60 947-1)		A 5			
Thread		M 4			
Torque	[Nm]	1.2 - 1.5			
Insulating material		PA			
Inflammability class in acc. with UL 94		V0			
Approval data (UL/CUL and CSA)					
Nominal voltage / current / conductor sizes	UL/CUL:[V]/[A]/AWG	600 / 41 / 20 - 8			
	CSA:[V]/[A]/AWG	–			

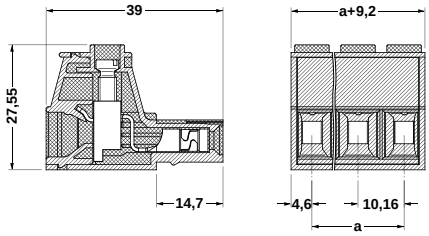

PC 6/…-STF-10,16 with Screw Flange 10.16 mm Pitch

HNote:
COMBICON plug connectors may only be actuated in the no-load condition. If smaller loads need to be switched for operational reasons, experimental values are available on request.

Description	No. of positions	Dim. a [mm]	Type	Order No.	Pcs./Pkt.
POWER COMBICON plugs, 10.16 mm pitch, color: green, with screw flange	2	10.16	**PC 6/2-STF-10,16**	**19 13 57 8**	50
	3	20.32	**PC 6/3-STF-10,16**	**19 13 58 1**	
	4	30.48	**PC 6/4-STF-10,16**	**19 13 59 4**	
	5	40.64	**PC 6/5-STF-10,16**	**19 13 60 4**	
	6	50.80	**PC 6/6-STF-10,16**	**19 13 61 7**	
	7	60.96	**PC 6/7-STF-10,16**	**19 13 62 0**	
	8	71.12	**PC 6/8-STF-10,16**	**19 13 63 3**	
(1) **Coding profile,** is inserted into the recess on the plug and header, insulating material: red			**CP-HCC 4**	**16 00 02 7**	100
(2) **Marker card,** with 10 pcs. 10-section marker strips, white, self-adhesive, for 100 terminal blocks			**SK 10/5** (see COMBICON catalog)		
(3) **Screwdriver**, blade: 1.0 x 4.0 x 100 mm, length: 200 mm			**SZS 1,0 x 4,0**	**12 05 06 6**	10

Technical data					
Dimensions		see description			
Pitch	[mm]	10.16			
Hole diameter	[mm|	–			
Pin dimensions	[mm]x[mm]	–			
Technical data in accordance with IEC/ DIN VDE					
Insulating material group	–	I			
Surge voltage category / contamination class	–/–	III / 3	III / 2	II / 2	
Rated voltage	[V]	1000	1000	1000	
Rated surge voltage	[kV]	8	8	8	
Nominal current / cross section	[A]/[mm²]	41 / 6.0			
Maximum load current / cross section	[A]/[mm²]	41 / 6.0			
Connection capacity					
Solid / stranded / conductor sizes	[mm²]/[mm²]/AWG	0.5 - 10.0 / 0.5 - 6.0 / 20 - 7			
Stranded with ferrule without / with plastic sleeve	[mm²]	0.5 - 6.0 / 0.5 -6.0			
Multiple connection (2 conductors with same cross section)					
Solid / stranded	[mm²]	0.5 - 6.0 / 0.5 - 6.0			
Stranded with ferrule with plastic sleeve	[mm²]	0.5 - 2.5			
Stranded with TWIN ferrule with plastic sleeve	[mm²]	0.5 - 4.0			
Stripping length	[mm]	12			
Internal cylindrical gauge (IEC 60 947-1)		A 5			
Thread		M 4			
Torque	[Nm]	1.2 - 1.5			
Insulating material		PA			
Inflammability class in acc. with UL 94		V0			
Approval data (UL/CUL and CSA)					
Nominal voltage / current / conductor sizes	UL/CUL:[V]/[A]/AWG	600 / 41 / 20 - 8			
	CSA:[V]/[A]/AWG	–			

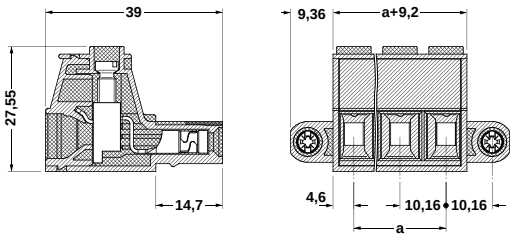

PC 6/…-G-10,16
10.16 mm Pitch

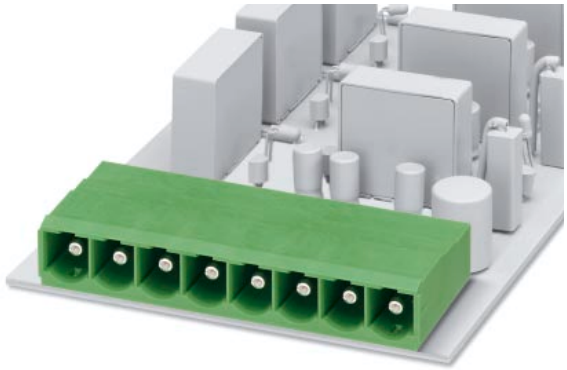

Note:
COMBICON plug connectors may only be actuated in the no-load condition. If smaller loads need to be switched for operational reasons, experimental values are available on request.

Description	No. of positions	Dim. a [mm]	Type	Order No.	Pcs./Pkt.
POWER COMBICON headers, 10.16 mm pitch, color: green, plug-in direction parallel to the PCB	2	10.16	**PC 6/2-G-10,16**	**19 13 64 6**	50
	3	20.32	**PC 6/3-G-10,16**	**19 13 65 9**	
	4	30.48	**PC 6/4-G-10,16**	**19 13 66 2**	
	5	40.64	**PC 6/5-G-10,16**	**19 13 67 5**	
	6	50.80	**PC 6/6-G-10,16**	**19 13 68 8**	
	7	60.96	**PC 6/7-G-10,16**	**19 13 69 1**	
	8	71.12	**PC 6/8-G-10,16**	**19 13 70 1**	
(1) **Coding profile,** is inserted into the recess on the plug and header, insulating material: red			**CP-HCC 4**	**16 00 02 7**	100
(2) **Marker card,** with 10 pcs. 10-section marker strips, white, self-adhesive, for 100 terminal blocks			**SK 10/5** (see COMBICON catalog)		

Technical data				
Dimensions		see description		
Pitch	[mm]	10.16		
Hole diameter	[mm|	1.7		
Pin dimensions	[mm]x[mm]	1.0 x 1.2		
Technical data in accordance with IEC/ DIN VDE				
Insulating material group	–	I		
Surge voltage category / contamination class	–/–	III / 3	III / 2	II / 2
Rated voltage	[V]	630[1])	1000	1000
Rated surge voltage	[kV]	6	8	8
Nominal current / cross section	[A]/[mm²]	41 / –		
Maximum load current / cross section	[A]/[mm²]	41 / –		
Connection capacity				
Solid / stranded / conductor sizes	[mm²]/[mm²]/AWG	–		
Stranded with ferrule without / with plastic sleeve	[mm²]	–		
Multiple connection (2 conductors with same cross section)				
Solid / stranded	[mm²]	–		
Stranded with ferrule with plastic sleeve	[mm²]	–		
Stranded with TWIN ferrule with plastic sleeve	[mm²]	–		
Stripping length	[mm]	–		
Internal cylindrical gauge (IEC 60 947-1)		–		
Thread		–		
Torque	[Nm]	–		
Insulating material		PA		
Inflammability class in acc. with UL 94		V0		
Approval data (UL/CUL and CSA)				
Nominal voltage / current / conductor sizes	UL/CUL:[V]/[A]/AWG	300 / 41 / -		
	CSA:[V]/[A]/AWG	–		

[1]) 1000 V on printed circuit board.

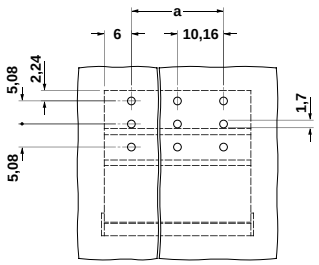

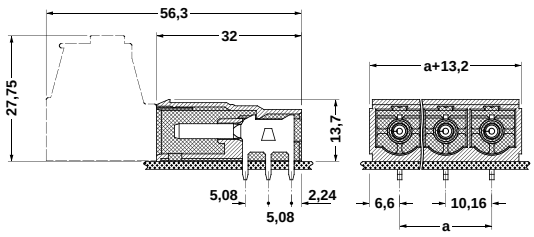

PC 6/…-GF-10,16 with Threaded Flange 10.16 mm Pitch

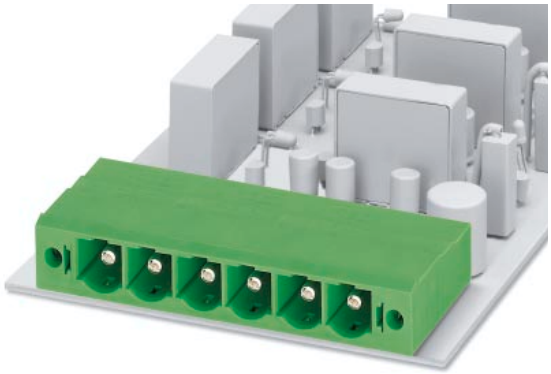

Note:
COMBICON plug connectors may only be actuated in the no-load condition. If smaller loads need to be switched for operational reasons, experimental values are available on request.

Description	No. of positions	Dim. a [mm]	Type	Order No.	Pcs./Pkt.
POWER COMBICON headers, 10.16 mm pitch, color: green, plug-in direction parallel to the PCB, with threaded flange	2	10.16	**PC 6/2-GF-10,16**	**19 13 71 4**	50
	3	20.32	**PC 6/3-GF-10,16**	**19 13 72 7**	
	4	30.48	**PC 6/4-GF-10,16**	**19 13 73 0**	
	5	40.64	**PC 6/5-GF-10,16**	**19 13 74 3**	
	6	50.80	**PC 6/6-GF-10,16**	**19 13 75 6**	
	7	60.96	**PC 6/7-GF-10,16**	**19 13 76 9**	
	8	71.12	**PC 6/8-GF-10,16**	**19 13 77 2**	
(1) **Coding profile,** is inserted into the recess on the plug and header, insulating material: red			**CP-HCC 4**	**16 00 02 7**	100
(2) **Marker card,** with 10 pcs. 10-section marker strips, white, self-adhesive, for 100 terminal blocks			**SK 10/5** (see COMBICON catalog)		

Technical data				
Dimensions		see description		
Pitch	[mm]	10.16		
Hole diameter	[mm|	1.7		
Pin dimensions	[mm]x[mm]	1.0 x 1.2		
Technical data in accordance with IEC/ DIN VDE				
Insulating material group	–	I		
Surge voltage category / contamination class	–/–	III / 3	III / 2	II / 2
Rated voltage	[V]	630[1])	1000	1000
Rated surge voltage	[kV]	6	8	8
Nominal current / cross section	[A]/[mm²]	41 / –		
Maximum load current / cross section	[A]/[mm²]	41 / –		
Connection capacity				
Solid / stranded / conductor sizes	[mm²]/[mm²]/AWG	–		
Stranded with ferrule without / with plastic sleeve	[mm²]	–		
Multiple connection (2 conductors with same cross section)				
Solid / stranded	[mm²]	–		
Stranded with ferrule with plastic sleeve	[mm²]	–		
Stranded with TWIN ferrule with plastic sleeve	[mm²]	–		
Stripping length	[mm]	–		
Internal cylindrical gauge (IEC 60 947-1)		–		
Thread		–		
Torque	[Nm]	–		
Insulating material		PA		
Inflammability class in acc. with UL 94		V0		
Approval data (UL/CUL and CSA)				
Nominal voltage / current / conductor sizes	UL/CUL:[V]/[A]/AWG	300 / 41 / -		
	CSA:[V]/[A]/AWG	–		

[1]) 1000 V on printed circuit board.

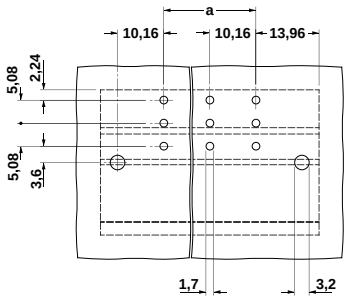

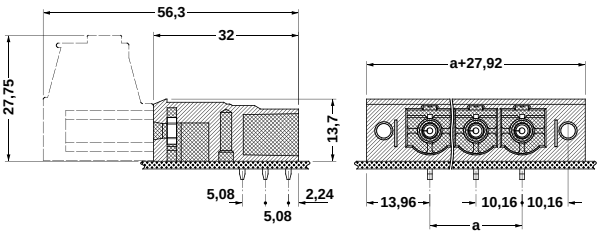

PCV 6/…-G-10,16
10.16 mm Pitch

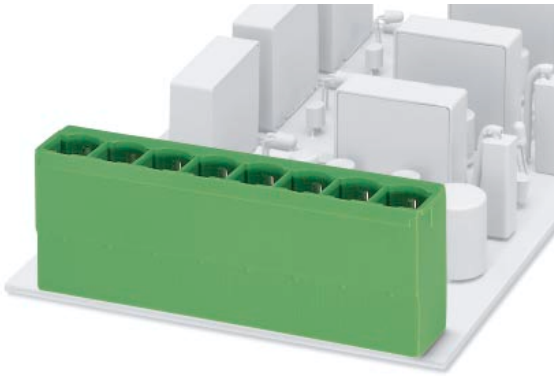

Note:
COMBICON plug connectors may only be actuated in the no-load condition. If smaller loads need to be switched for operational reasons, experimental values are available on request.

Description	No. of positions	Dim. a [mm]	Type	Order No.	Pcs./Pkt.
POWER COMBICON headers, 10.16 mm pitch, color: green, plug-in direction vertical to the PCB,	2	10.16	**PCV 6/2-G-10,16**	**19 22 48 8**	50
	3	20.32	**PCV 6/3-G-10,16**	**19 22 49 1**	
	4	30.48	**PCV 6/4-G-10,16**	**19 22 50 1**	
	5	40.64	**PCV 6/5-G-10,16**	**19 22 51 4**	
	6	50.80	**PCV 6/6-G-10,16**	**19 22 52 7**	
	7	60.96	**PCV 6/7-G-10,16**	**19 22 53 0**	
	8	71.12	**PCV 6/8-G-10,16**	**19 22 54 3**	
	9	81.28	**PCV 6/9-G-10,16**	**19 22 55 6**	
(1) **Coding profile,** is inserted into the recess on the plug and header, insulating material: red			**CP-HCC 4**	**16 00 02 7**	100
(2) **Marker card,** with 10 pcs. 10-section marker strips, white, self-adhesive, for 100 terminal blocks			**SK 10/5** (see COMBICON catalog)		

Technical data				
Dimensions		see description		
Pitch	[mm]	10.16		
Hole diameter	[mm|	1.7		
Pin dimensions	[mm]x[mm]	1.0 x 1.2		
Technical data in accordance with IEC/ DIN VDE				
Insulating material group	–	I		
Surge voltage category / contamination class	–/–	III / 3	III / 2	II / 2
Rated voltage	[V]	630[1])	1000	1000
Rated surge voltage	[kV]	6	8	8
Nominal current / cross section	[A]/[mm²]	41 / –		
Maximum load current / cross section	[A]/[mm²]	41 / –		
Connection capacity				
Solid / stranded / conductor sizes	[mm²]/[mm²]/AWG	–		
Stranded with ferrule without / with plastic sleeve	[mm²]	–		
Multiple connection (2 conductors with same cross section)				
Solid / stranded	[mm²]	–		
Stranded with ferrule with plastic sleeve	[mm²]	–		
Stranded with TWIN ferrule with plastic sleeve	[mm²]	–		
Stripping length	[mm]	–		
Internal cylindrical gauge (IEC 60 947-1)		–		
Thread		–		
Torque	[Nm]	–		
Insulating material		PA		
Inflammability class in acc. with UL 94		V0		
Approval data (UL/CUL and CSA)				
Nominal voltage / current / conductor sizes	UL/CUL:[V]/[A]/AWG	300 / 41 / -		
	CSA:[V]/[A]/AWG	–		

[1]) 1000 V on printed circuit board.

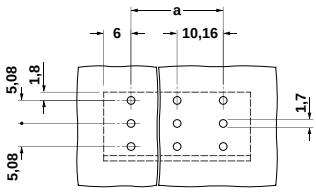

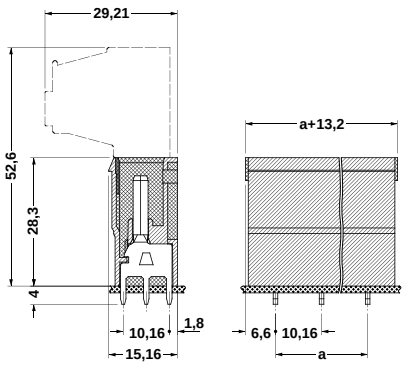

PCV 6/…-GF-10,16 with Threaded Flange 10.16 mm Pitch

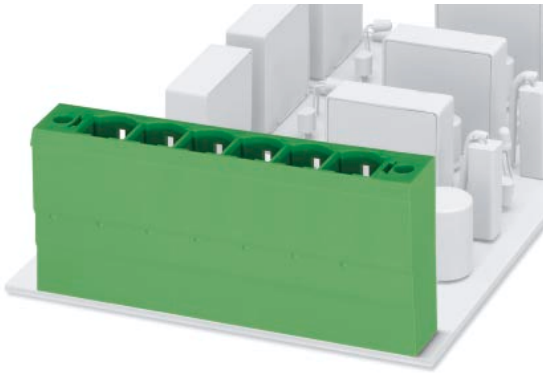

Note:
COMBICON plug connectors may only be actuated in the no-load condition. If smaller loads need to be switched for operational reasons, experimental values are available on request.

Description	No. of positions	Dim. a [mm]	Type	Order No.	Pcs./Pkt.
POWER COMBICON headers, 10.16 mm pitch, color: green, plug-in direction vertical to the PCB, with threaded flange	2	10.16	**PCV 6/2-GF-10,16**	**19 22 56 9**	50
	3	20.32	**PCV 6/3-GF-10,16**	**19 22 57 2**	
	4	30.48	**PCV 6/4-GF-10,16**	**19 22 58 5**	
	5	40.64	**PCV 6/5-GF-10,16**	**19 22 59 8**	
	6	50.80	**PCV 6/6-GF-10,16**	**19 22 60 8**	
	7	60.96	**PCV 6/7-GF-10,16**	**19 22 61 1**	
	8	71.12	**PCV 6/8-GF-10,16**	**19 22 62 4**	
(1) **Coding profile,** is inserted into the recess on the plug and header, insulating material: red			**CP-HCC 4**	**16 00 02 7**	100
(2) **Marker card,** with 10 pcs. 10-section marker strips, white, self-adhesive, for 100 terminal blocks			**SK 10/5** (see COMBICON catalog)		

Technical data				
Dimensions		see description		
Pitch	[mm]	10.16		
Hole diameter	[mm|	1.7		
Pin dimensions	[mm]x[mm]	1.0 x 1.2		
Technical data in accordance with IEC/ DIN VDE				
Insulating material group	–	I		
Surge voltage category / contamination class	–/–	III / 3	III / 2	II / 2
Rated voltage	[V]	630[1])	1000	1000
Rated surge voltage	[kV]	6	8	8
Nominal current / cross section	[A]/[mm²]	41 / –		
Maximum load current / cross section	[A]/[mm²]	41 / –		
Connection capacity				
Solid / stranded / conductor sizes	[mm²]/[mm²]/AWG	–		
Stranded with ferrule without / with plastic sleeve	[mm²]	–		
Multiple connection (2 conductors with same cross section)				
Solid / stranded	[mm²]	–		
Stranded with ferrule with plastic sleeve	[mm²]	–		
Stranded with TWIN ferrule with plastic sleeve	[mm²]	–		
Stripping length	[mm]	–		
Internal cylindrical gauge (IEC 60 947-1)		–		
Thread		–		
Torque	[Nm]	–		
Insulating material		PA		
Inflammability class in acc. with UL 94		V0		
Approval data (UL/CUL and CSA)				
Nominal voltage / current / conductor sizes	UL/CUL:[V]/[A]/AWG	300 / 41 / -		
	CSA:[V]/[A]/AWG	–		

[1]) 1000 V on printed circuit board.

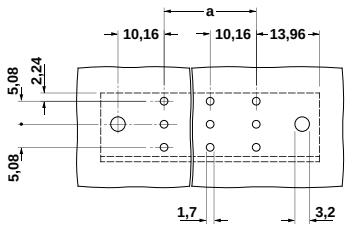

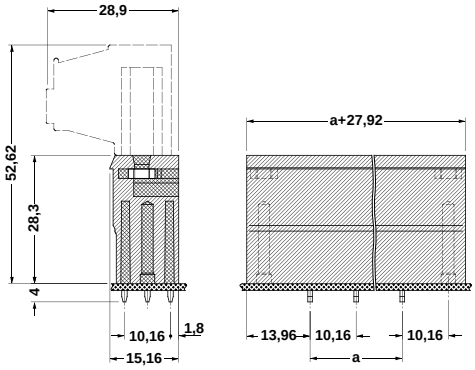

POWER COMBICON Plug-In Block for Direct Mounting, 10.16 mm Pitch

All electronic components are pluggable and easy to maintain. The plug is not connected to the PCB, however, but vice versa.
Plug-in blocks PCU 6/…-STD-10,16with a screw connection and vertical plug-in direction have a base plate with two mounting ears for screwing onto mounting plates or into component housings.
They are available with 2 to 9 positions and a 10.16 mm pitch.
The self-adhesive marker cards SK 10/5 are used for labeling (see COMBICON catalog)

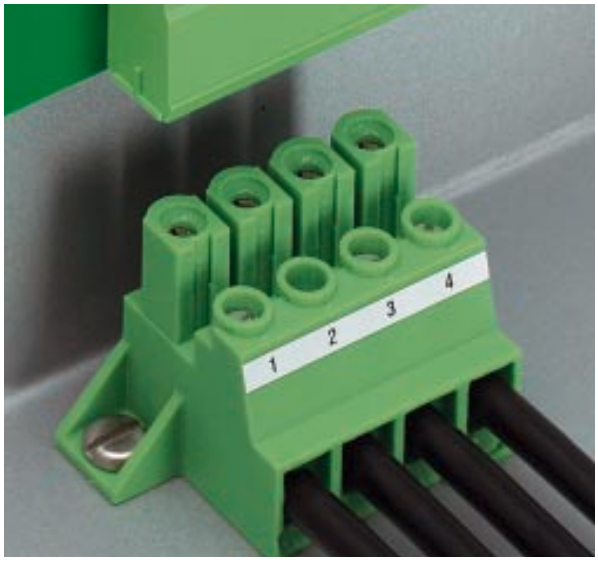

PCU 6/…-STD-10,16
10.16 mm Pitch

Note:
COMBICON plug connectors may only be actuated in the no-load condition. If smaller loads need to be switched for operational reasons, experimental values are available on request.

Description	No. of positions	Dim. a [mm]	Type	Order No.	Pcs./Pkt.
POWER COMBICON plug-in block, 10.16 mm pitch, color: green	2	10.16	**PCU 6/2-STD-10,16**	**19 22 63 7**	50
	3	20.32	**PCU 6/3-STD-10,16**	**19 22 64 0**	
	4	30.48	**PCU 6/4-STD-10,16**	**19 22 65 3**	
	5	40.64	**PCU 6/5-STD-10,16**	**19 22 66 6**	
	6	50.80	**PCU 6/6-STD-10,16**	**19 22 67 9**	
	7	60.96	**PCU 6/7-STD-10,16**	**19 22 68 2**	
	8	71.12	**PCU 6/8-STD-10,16**	**19 22 69 5**	
	9	81.28	**PCU 6/9-STD-10,16**	**19 22 70 5**	
(1) **Coding profile,** is inserted into the recess on the plug and header, insulating material: red			**CP-HCC 4**	**16 00 02 7**	100
(2) **Marker card,** with 10 pcs. 10-section marker strips, white, self-adhesive, for 100 terminal blocks			**SK 10/5** (see COMBICON catalog)		
(3) **Screwdriver**, blade: 1.0 x 4.0 x 100 mm, length: 200 mm			**SZS 1,0 x 4,0**	**12 05 06 6**	10

Technical data				
Dimensions		see description		
Pitch	[mm]	10.16		
Hole diameter	[mm|	–		
Pin dimensions	[mm]x[mm]	–		
Technical data in accordance with IEC/ DIN VDE				
Insulating material group	–	I		
Surge voltage category / contamination class	–/–	III / 3	III / 2	II / 2
Rated voltage	[V]	1000	1000	1000
Rated surge voltage	[kV]	8	8	8
Nominal current / cross section	[A]/[mm²]	41 / 6.0		
Maximum load current / cross section	[A]/[mm²]	41 / 6.0		
Connection capacity				
Solid / stranded / conductor sizes	[mm²]/[mm²]/AWG	0.5 - 10.0 / 0.5 - 6.0 / 20 - 7		
Stranded with ferrule without / with plastic sleeve	[mm²]	0.5 - 6.0 / 0.5 -6.0		
Multiple connection (2 conductors with same cross section)				
Solid / stranded	[mm²]	0.5 - 6.0 / 0.5 - 6.0		
Stranded with ferrule with plastic sleeve	[mm²]	0.5 - 2.5		
Stranded with TWIN ferrule with plastic sleeve	[mm²]	0.5 - 4.0		
Stripping length	[mm]	12		
Internal cylindrical gauge (IEC 60 947-1)		A 5		
Thread		M 4		
Torque	[Nm]	1.2 - 1.5		
Insulating material		PA		
Inflammability class in acc. with UL 94		V0		
Approval data (UL/CUL and CSA)				
Nominal voltage / current / conductor sizes	UL/CUL:[V]/[A]/AWG	–		
	CSA:[V]/[A]/AWG	–		

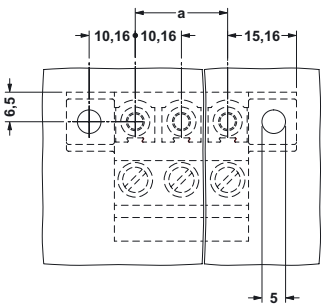

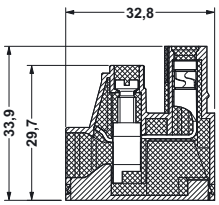

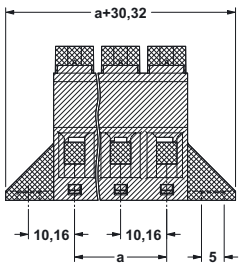

© Phoenix Contact 01.03.02 TNR: 5099540-02 http://www.phoenixcontact.com

О компании

ООО "ТрейдЭлектроникс" - это оперативные поставки широкого спектра электронных компонентов отечественного и импортного производства напрямую от производителей и с крупнейших мировых складов. Реализуемая нашей компанией продукция насчитывает более полумиллиона наименований.

Благодаря этому наша компания предлагает к поставке практически не ограниченный ассортимент компонентов как оптовыми, мелкооптовыми партиями, так и в розницу.

Наличие собственной эффективной системы логистики обеспечивает надежную поставку продукции по конкурентным ценам в точно указанные сроки.

Срок поставки со стоков в **Европе и Америке – от 3 до 14 дней.**

Срок поставки из **Азии – от 10 дней.**

Благодаря развитой сети поставщиков, помогаем в поиске и приобретении экзотичных или снятых с производства компонентов.

Предоставляем спец цены на элементы для создания инженерных сэмплов.

Упорный труд, качественный результат дают нам право быть уверенными в себе и надежными для наших клиентов.

Наша компания это:

- Гарантия качества поставляемой продукции
- Широкий ассортимент
- Минимальные сроки поставок
- Техническая поддержка
- Подбор комплектации
- Индивидуальный подход
- Гибкое ценообразование

Наша организация особенно сильна в поставках модулей, микросхем, пассивных компонентов, ксайленсах (XC), EPF, EPM и силовой электроники.

Большой выбор предлагаемой продукции, различные виды оплаты и доставки, позволят Вам сэкономить время и получить максимум выгоды от сотрудничества с нами!

Trade Electronics.ru

гарантия бесперебойности производства и качества выпускаемой продукции

Перечень производителей, продукцию которых мы поставляем на российский рынок

AMD
ANALOG DEVICES
BOURNS
Coilcraft
élantec Semiconductor, Inc.
HARRIS
Infineon
JRC
MICREL
MOTOROLA
nichicon
PHILIPS
ROHM
SGS-THOMSON
Sipex
TAIYO YUDEN
TOKO
ZILOG
Winbond
Allegro
ATMEL
BURR - BROWN
EXAR
HITACHI
intel
Lattice
muRata
OKI
QUALCOMM
SAMSUNG
SHARP
SONY
TDK
TOSHIBA
KYOCERA
ALTERA
AVX
CITILYST
CYPRESS
FAIRCHILD SEMICONDUCTOR
HOLTEK
International IOR Rectifier
LINEAR TECHNOLOGY
MITSUBISHI
National Semiconductor
ON Semiconductor
REALTEK
SANYO
SHINDENGEN
SGS
TECCOR
TUNDRA
XILINX
Amphenol
Bay Linear
CIRRUS LOGIC
DALLAS
FUJITSU
IDT
intersil
MAXIM
molex
NEC
Panasonic
RENESAS
SII
SIEMENS
ST
Texas Instruments
VISHAY
ZETEX SEMICONDUCTORS

Trade Electronics.ru

гарантия бесперебойности производства и качества выпускаемой продукции

С удовольствием будем прорабатывать для Вас поставки всех необходимых компонентов по текущим запросам для скорейшего выявления групп элементов, по которым сотрудничество именно с нашей компанией будет для Вас максимально выгодным!

С уважением,

Менеджер отдела продаж ООО

«Трейд Электроникс»

Шишлаков Евгений

8 (495)668-30-28 доб 169

manager28@tradeelectronics.ru

http://www.tradeelectronics.ru/