Microsemi
SCOTTSDALE DIVISION

1N821 thru 1N829A-1 DO-7

6.2 & 6.55 Volt Temperature Compensated Zener Reference Diodes

ALSO AVAILABLE IN SURFACE MOUNT

DESCRIPTION

The popular 1N821 thru 1N829 series of Zero-TC Reference Diodes provides a selection of both 6.2 V and 6.55 V nominal voltages and temperature coefficients to as low as 0.0005%/°C for minimal voltage change with temperature when operated at 7.5 mA. These glass axial-leaded DO-7 reference diodes are also available in JAN, JANTX, JANTXV, and JANS military qualifications. Microsemi also offers numerous other Zener Reference Diode products for a variety of other voltages up to 200 V.

APPEARANCE

DO-7
(DO-204AA)

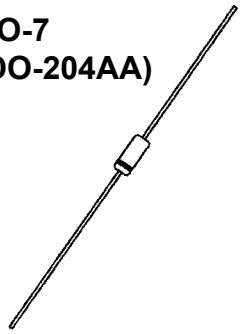

IMPORTANT: For the most current data, consult *MICROSEMI's* website: http://www.microsemi.com

FEATURES

- JEDEC registered 1N821 thru 1N829 series
- Internal metallurgical bonds
- Double anode option with 1N822 and 1N824 selection
- Reference voltage selection of 6.2 V & 6.55 V +/-5% with further tight tolerance options at nominal of 6.35 V
- 1N821, 823, 825, 827 and 829 also have military qualification to MIL-PRF-19500/159 up to the JANS level by adding JAN, JANTX, JANTXV, or JANS prefixes to part numbers as well as the "-1" suffix, e.g. JANTX1N829-1, etc.
- Radiation Hardened devices available by changing "1N" prefix to "RH", e.g. RH827, RH 829, RH829A, etc. Also consult factory for "RH" data sheet brochure
- Military surface mount equivalents also available in DO-213AA with UR-1 suffix and JAN, JANTX, or JANTXV prefix, e.g. JANTX1N829UR-1 (see separate data sheet)
- Also available in smaller axial-leaded DO-35 package (see separate data sheet)

APPLICATIONS / BENEFITS

- Provides minimal voltage changes over a broad temperature range
- For instrumentation and other circuit designs requiring a stable voltage reference
- Maximum temperature coefficient selections available from 0.01%/ºC to 0.0005%/ºC
- Tight voltage tolerances with nominal reference voltages of 6.35 V available by adding tolerance 1%, 2%, 3%, etc. after the part number for identification e.g. 1N827-2%, 1N829A -1%, 1N829-1-1%, etc.
- Flexible axial-lead mounting terminals
- Nonsensitive to ESD per MIL-STD-750 Method 1020

MAXIMUM RATINGS

- Operating & StorageTemperature: -65°C to +175°C
- DC Power Dissipation: 500 mW @ T_L = 25°C and maximum current I_{ZM} of 70 mA. NOTE: For optimum voltage-temperature stability, I_Z = 7.5 mA (less than 50 mW in dissipated power)
- Solder temperatures: 260 °C for 10 s (maximum)

MECHANICAL AND PACKAGING

- CASE: Hermetically sealed glass case with DO-7 (DO-204AA) package
- TERMINALS: Tin-lead plated and solderable per MIL-STD-750, Method 2026
- MARKING: Part number and cathode band (except double anode 1N822 and 1N824)
- POLARITY: Reference diode to be operated with the banded end positive with respect to the opposite end
- TAPE & REEL option: Standard per EIA-296 (add "TR" suffix to part number)
- WEIGHT: 0.2 grams.
- See package dimensions on last page

Copyright © 2003

Microsemi
Scottsdale Division
8700 E. Thomas Rd. PO Box 1390, Scottsdale, AZ 85252 USA, (480) 941-6300, Fax: (480) 947-1503

*ELECTRICAL CHARACTERISTICS @ 25°C, unless otherwise specified

JEDEC TYPE NUMBER (Note 1, 5 & 6)	ZENER VOLTAGE (Note 1 and 4) V_Z @ I_{ZT}	ZENER TEST CURRENT I_{ZT}	MAXIMUM ZENER IMPEDANCE (Note 2) Z_{ZT} @ I_{ZT}	MAXIMUM REVERSE CURRENT I_R @ 3 V	VOLTAGE TEMPERATURE STABILITY (ΔV_{ZT} MAX) -55°C to +100°C (Note 3 and 4)	EFFECTIVE TEMPERATURE COEFFICIENT α_{VZ}
	VOLTS	mA	OHMS	µA	mV	%/°C
1N821	5.9 – 6.5	7.5	15	2.0	96	0.01
1N821A	5.9 – 6.5	7.5	10	2.0	96	0.01
1N822†	5.9 – 6.5	7.5	15	2.0	96	0.01
1N823	5.9 – 6.5	7.5	15	2.0	48	0.005
1N823A	5.9 – 6.5	7.5	10	2.0	48	0.005
1N824†	5.9 – 6.5	7.5	15	2.0	48	0.005
1N825	5.9 – 6.5	7.5	15	2.0	19	0.002
1N825A	5.9 – 6.5	7.5	10	2.0	19	0.002
1N826	6.2 – 6.9	7.5	15	2.0	20	0.002
1N827	5.9 – 6.5	7.5	15	2.0	9	0.001
1N827A	5.9 – 6.5	7.5	10	2.0	9	0.001
1N828	6.2 – 6.9	7.5	15	2.0	10	0.001
1N829	5.9 – 6.5	7.5	15	2.0	5	0.0005
1N829A	5.9 – 6.5	7.5	10	2.0	5	0.0005

*JEDEC Registered Data.

†Double Anode; electrical specifications apply under both bias polarities.

NOTES:

1. Add a "-1" suffix for internal metallurgical bond. When ordering devices with tighter tolerances than specified for the V_Z voltage nominal of 6.35 V, add a hyphened suffix to the part number for desired tolerance, e.g. 1N827-1-2%, 1N829-1-1%, 1N829A-1%, 1N829A-1-1%, etc.
2. Zener impedance measured by superimposing 0.75 mA ac rms on 7.5 mA dc @ 25°C.
3. The maximum allowable change observed over the entire temperature range i.e., the diode voltage will not exceed the specified mV change at discrete temperature between the established limits.
4. Voltage measurements to be performed 15 seconds after application of dc current.
5. 1N821, 1N823, 1N825, 1N827, and 1N829 also have qualification to MIL-PRF-19500/159 by adding the JAN, JANTX, JANTXV, or JANS prefix to part numbers as well as the "-1" suffix; e.g. JANTX1N827-1, JANTXV1N829-1, etc.
6. Designate Radiation Hardened devices with "RH" prefix instead of "1N", e.g. RH829A instead of 1N829A.

GRAPHS

The curve shown in Figure 1 is typical of the diode series and greatly simplifies the estimation of the Temperature Coefficient (TC) when the diode is operated at currents other than 7.5mA.

EXAMPLE: A diode in this series is operated at a current of 7.5mA and has specified Temperature Coefficient (TC) limits of +/-0.005%/°C. To obtain the typical Temperature Coefficient limits for this same diode operated at a current of 6.0mA, the new TC limits (%/°C) can be estimated using the graph in FIGURE 1.

At a test current of 6.0mA the change in Temperature Coefficient (TC) is approximately –0.0006%.°C. The algebraic sum of +/-0.005%°C and –0.0006%/°C gives the estimated limits of +0.0044%/°C and -0.0056%/°C.

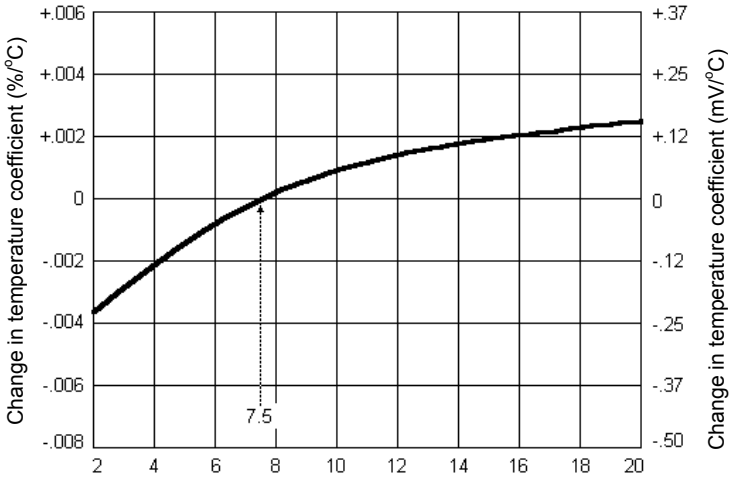

FIGURE 1

TYPICAL CHANGE OF TEMPERATURE COEFFICIENT WITH CHANGE IN OPERATING CURRENT.

www.Microsemi.COM

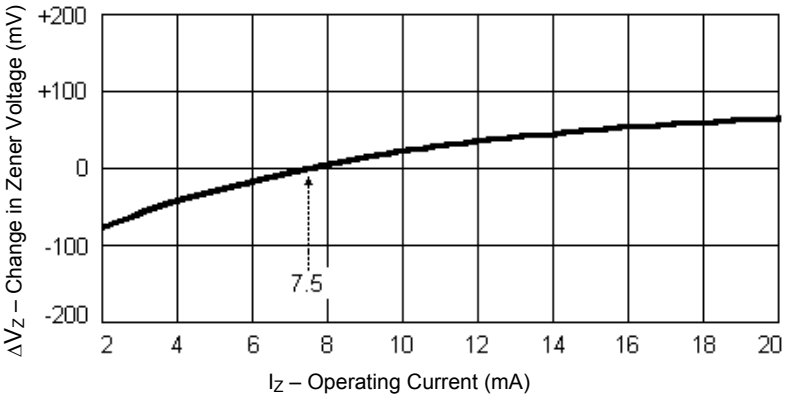

FIGURE 2
TYPICAL CHANGE OF ZENER VOLTAGE WITH CHANGE IN OPERATING CURRENT

This curve in Figure 2 illustrates the change of diode voltage arising from the effect of impedance. It is in effect an exploded view of the zener operating region of the I-V characteristic.

In conjunction with Figure 1, this curve can be used to estimate total voltage regulation under conditions of both varying temperature and current.

DIMENSIONS

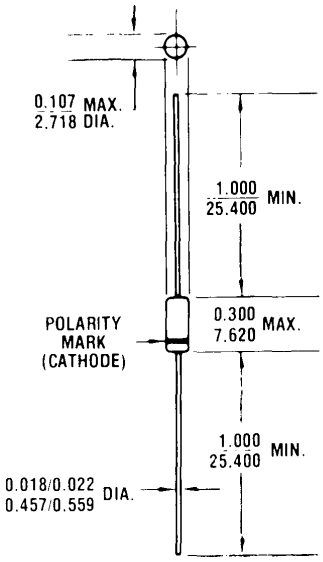

All dimensions in INCH
mm

www.Microsemi.COM

О компании

ООО "ТрейдЭлектроникс" - это оперативные поставки широкого спектра электронных компонентов отечественного и импортного производства напрямую от производителей и с крупнейших мировых складов. Реализуемая нашей компанией продукция насчитывает более полумиллиона наименований.

Благодаря этому наша компания предлагает к поставке практически не ограниченный ассортимент компонентов как оптовыми, мелкооптовыми партиями, так и в розницу.

Наличие собственной эффективной системы логистики обеспечивает надежную поставку продукции по конкурентным ценам в точно указанные сроки.

Срок поставки со стоков в **Европе и Америке – от 3 до 14 дней.**

Срок поставки из **Азии – от 10 дней.**

Благодаря развитой сети поставщиков, помогаем в поиске и приобретении экзотичных или снятых с производства компонентов.

Предоставляем спец цены на элементы для создания инженерных сэмплов.

Упорный труд, качественный результат дают нам право быть уверенными в себе и надежными для наших клиентов.

Наша компания это:

- Гарантия качества поставляемой продукции
- Широкий ассортимент
- Минимальные сроки поставок
- Техническая поддержка
- Подбор комплектации
- Индивидуальный подход
- Гибкое ценообразование

Наша организация особенно сильна в поставках модулей, микросхем, пассивных компонентов, ксайленсах (XC), EPF, EPM и силовой электроники.

Большой выбор предлагаемой продукции, различные виды оплаты и доставки, позволят Вам сэкономить время и получить максимум выгоды от сотрудничества с нами!

Trade Electronics.ru

гарантия бесперебойности производства и качества выпускаемой продукции

Перечень производителей, продукцию которых мы поставляем на российский рынок

AMD
ANALOG DEVICES
BOURNS
Coilcraft
élantec Semiconductor, Inc.
HARRIS
Infineon
JRC
MICREL
MOTOROLA
nichicon
PHILIPS
ROHM
SGS-THOMSON
Sipex
TAIYO YUDEN
TOKO
ZILOG
Winbond
Allegro
ATMEL
BURR - BROWN
EXAR
HITACHI
intel
Lattice
muRata
OKI
QUALCOMM
SAMSUNG
SHARP
SONY
TDK
TOSHIBA
KYOCERA
ALTERA
AVX
CITILYST
CYPRESS
FAIRCHILD SEMICONDUCTOR
HOLTEK
International IOR Rectifier
LINEAR TECHNOLOGY
MITSUBISHI
National Semiconductor
ON Semiconductor
REALTEK
SANYO
SHINDENGEN
SGS
TECCOR
TUNDRA
XILINX
Amphenol
Bay Linear
CIRRUS LOGIC
DALLAS
FUJITSU
IDT
intersil
MAXIM
molex
NEC
Panasonic
RENESAS
SII
SIEMENS
ST
Texas Instruments
VISHAY
ZETEX SEMICONDUCTORS

Trade Electronics.ru

гарантия бесперебойности производства и качества выпускаемой продукции

С удовольствием будем прорабатывать для Вас поставки всех необходимых компонентов по текущим запросам для скорейшего выявления групп элементов, по которым сотрудничество именно с нашей компанией будет для Вас максимально выгодным!

С уважением,

Менеджер отдела продаж ООО

«Трейд Электроникс»

Шишлаков Евгений

8 (495)668-30-28 доб 169

manager28@tradeelectronics.ru

http://www.tradeelectronics.ru/