CMOS Low Voltage, 4 Ω Quad, SPST Switches

ADG711/ADG712/ADG713

FEATURES

1.8 V to 5.5 V single supply
Low on resistance (2.5 Ω Typ)
Low on resistance flatness
−3 dB bandwidth > 200 MHz
Rail-to-rail operation
16-lead TSSOP and SOIC packages
Fast switching times: t_{ON} =16 ns, t_{OFF} =10 ns
Typical power consumption (< 0.01 µW)
TTL/CMOS compatible
Qualified for automotive applications

APPLICATIONS

USB 1.1 signal switching circuits
Cell phones
PDAs
Battery-powered systems
Communication systems
Sample hold systems
Audio signal routing
Video switching
Mechanical reed relay replacement

FUNCTIONAL BLOCK DIAGRAM

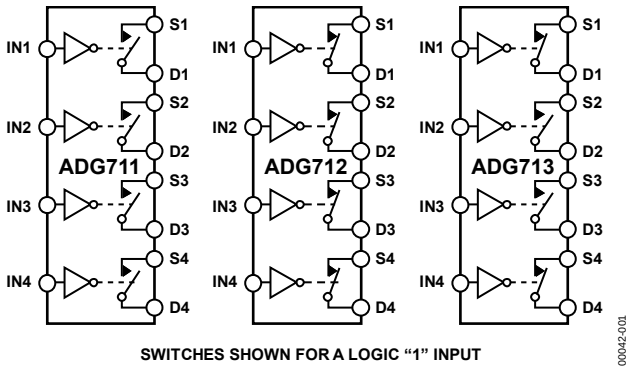

Figure 1.

GENERAL DESCRIPTION

The ADG711, ADG712, and ADG713 are monolithic CMOS devices containing four independently selectable switches. These switches are designed on an advanced submicron process that provides low power dissipation yet gives high switching speed, low on resistance, low leakage currents, and high bandwidth.

They are designed to operate from a single 1.8 V to 5.5 V supply, making them ideal for use in battery-powered instruments and with the new generation of DACs and ADCs from Analog Devices, Inc. Fast switching times and high bandwidth make the parts suitable for switching USB 1.1 data signals and video signals.

The ADG711, ADG712, and ADG713 contain four independent single-pole/single-throw (SPST) switches. The ADG711 and ADG712 differ only in that the digital control logic is inverted. The ADG711 switches are turned on with a logic low on the appropriate control input, while a logic high is required to turn on the switches of the ADG712. The ADG713 contains two switches whose digital control logic is similar to the ADG711, while the logic is inverted on the other two switches.

Each switch conducts equally well in both directions when On. The ADG713 exhibits break-before-make switching action.

The ADG711/ADG712/ADG713 are available in 16-lead TSSOP and 16-lead SOIC packages.

PRODUCT HIGHLIGHTS

1. 1.8 V to 5.5 V Single-Supply Operation.
   The ADG711, ADG712, and ADG713 offer high performance and are fully specified and guaranteed with 3 V and 5 V supply rails.
2. Very Low R_{ON} (4.5 Ω maximum at 5 V, 8 Ω maximum at 3 V). At supply voltage of 1.8 V, R_{ON} is typically 35 Ω over the temperature range.
3. Low On Resistance Flatness.
4. −3 dB Bandwidth >200 MHz.
5. Low Power Dissipation. CMOS construction ensures low power dissipation.
6. Fast t_{ON}/t_{OFF}.
7. Break-Before-Make Switching.
   This prevents channel shorting when the switches are configured as a multiplexer (ADG713 only).
8. 16-Lead TSSOP and 16-Lead SOIC Packages.

Rev. B
Information furnished by Analog Devices is believed to be accurate and reliable. However, no responsibility is assumed by Analog Devices for its use, nor for any infringements of patents or other rights of third parties that may result from its use. Specifications subject to change without notice. No license is granted by implication or otherwise under any patent or patent rights of Analog Devices. Trademarks and registered trademarks are the property of their respective owners.

One Technology Way, P.O. Box 9106, Norwood, MA 02062-9106, U.S.A.
Tel: 781.329.4700 **www.analog.com**
Fax: 781.461.3113 **©2004–2011 Analog Devices, Inc. All rights reserved.**

TABLE OF CONTENTS

Features ... 1
Applications ... 1
Functional Block Diagram ... 1
General Description ... 1
Product Highlights ... 1
Revision History ... 2
Specifications ... 3
Absolute Maximum Ratings ... 5
ESD Caution ... 5
Pin Configuration and Function Descriptions ... 6
Typical Performance Characteristics ... 7
Test Circuits ... 9
Terminology ... 11
Applications Information ... 12
Outline Dimensions ... 13
Ordering Guide ... 14
Automotive Products ... 14

REVISION HISTORY

6/11—Rev. A to Rev. B

Updated Format ... Universal
Changes to Features Section ... 1
Changes to Absolute Maximum Ratings Table ... 5
Changes to Ordering Guide ... 14
Added Automotive Products Section ... 14

3/04—Rev. 0 to Rev. A

Added Applications ... 1
Changes to Ordering Guide ... 4
Updated Outline Dimensions ... 10

SPECIFICATIONS

V_{DD} = +5 V ± 10%, GND = 0 V. All specifications −40°C to +85°C, unless otherwise noted.

Table 1.

Parameter	+25°C	−40°C to +85°C	Unit	Test Conditions/Comments
ANALOG SWITCH				
Analog Signal Range		0 V to V_{DD}	V	
On Resistance (R_{ON})	2.5		Ω typ	V_S = 0 V to V_{DD}, I_S = −10 mA;
	4	4.5	Ω max	See Figure 11
On Resistance Match Between		0.05	Ω typ	V_S = 0 V to V_{DD}, I_S = −10 mA
Channels (ΔR_{ON})		0.3	Ω max	
On Resistance Flatness ($R_{FLAT(ON)}$)	0.5		Ω typ	V_S = 0 V to V_{DD}, I_S = −10 mA
		1.0	Ω max	
LEAKAGE CURRENTS				V_{DD} = +5.5 V
Source Off Leakage I_S (Off)	±0.01		nA typ	V_S = 4.5 V/1 V, V_D = 1 V/4.5 V
	±0.1	±0.2	nA max	See Figure 12
Drain Off Leakage I_D (Off)	±0.01		nA typ	V_S = 4.5 V/1 V, V_D = 1 V/4.5 V
	±0.1	±0.2	nA max	See Figure 12
Channel On Leakage I_D, I_S (On)	±0.01		nA typ	V_S = V_D = 1 V, or 4.5 V
	±0.1	±0.2	nA max	See Figure 13
DIGITAL INPUTS				
Input High Voltage, V_{INH}		2.4	V min	
Input Low Voltage, V_{INL}		0.8	V max	
Input Current				
I_{INL} or I_{INH}	0.005		µA typ	V_{IN} = V_{INL} or V_{INH}
		±0.1	µA max	
DYNAMIC CHARACTERISTICS[1]				
t_{ON}	11		ns typ	R_L = 300 Ω, C_L = 35 pF
		16	ns max	V_S = 3 V; see Figure 14
t_{OFF}	6		ns typ	R_L = 300 Ω, C_L = 35 pF
		10	ns max	V_S = 3 V; see Figure 14
Break-Before-Make Time Delay, t_D	6		ns typ	R_L = 300 Ω, C_L = 35 pF
(ADG713 Only)		1	ns min	V_{S1} = V_{S2} = 3 V; see Figure 15
Charge Injection	3		pC typ	V_S = 2 V; R_S = 0 Ω, C_L = 1 nF; see Figure 16
Off Isolation	−58		dB typ	R_L = 50 Ω, C_L = 5 pF, f = 10 MHz
	−78		dB typ	R_L = 50 Ω, C_L = 5 pF, f = 1 MHz; see Figure 17
Channel-to-Channel Crosstalk	−90		dB typ	R_L = 50 Ω, C_L = 5 pF, f = 10 MHz; see Figure 18
Bandwidth −3 dB	200		MHz typ	R_L = 50 Ω, C_L = 5 pF; see Figure 19
C_S	10		pF typ	
C_D	10		pF typ	
C_D, C_S (On)	22		pF typ	
POWER REQUIREMENTS				V_{DD} = +5.5 V
I_{DD}	0.001		µA typ	Digital inputs = 0 V or 5 V
		1.0	µ max	

[1] Guaranteed by design, not subject to production test.

V_{DD} = +3 V ± 10%, GND = 0 V. All specifications −40°C to +85°C, unless otherwise noted.

Table 2.

Parameter	+25°C	−40°C to +85°C	Unit	Test Conditions/Comments
ANALOG SWITCH				
Analog Signal Range		0 V to V_{DD}	V	
On Resistance (R_{ON})	5	5.5	Ω typ	V_S = 0 V to V_{DD}, I_S = −10 mA;
		8	Ω max	See Figure 11
On Resistance Match Between	0.1		Ω typ	V_S = 0 V to V_{DD}, I_S = −10 mA
Channels (ΔR_{ON})		0.3	Ω max	
On Resistance Flatness ($R_{FLAT(ON)}$)		2.5	Ω typ	V_S = 0 V to V_{DD}, I_S = −10 mA
LEAKAGE CURRENTS				V_{DD} = +3.3 V
Source Off Leakage I_S (Off)	±0.01		nA typ	V_S = 3 V/1 V, V_D = 1 V/3 V
	±0.1	±0.2	nA max	See Figure 12
Drain Off Leakage I_D (Off)	±0.01		nA typ	V_S = 3 V/1 V, V_D = 1 V/ 3 V
	±0.1	±0.2	nA max	See Figure 12
Channel On Leakage I_D, I_S (On)	±0.01		nA typ	V_S = V_D = 1 V, or 3 V
	±0.1	±0.2	nA max	See Figure 13
DIGITAL INPUTS				
Input High Voltage, V_{INH}		2.0	V min	
Input Low Voltage, V_{INL}		0.4	V max	
Input Current				
I_{INL} or I_{INH}	0.005		µA typ	V_{IN} = V_{INL} or V_{INH}
		±0.1	µA max	
DYNAMIC CHARACTERISTICS[1]				
t_{ON}	13		ns typ	R_L = 300 Ω, C_L = 35 pF
		20	ns max	V_S = 2 V; see Figure 14
t_{OFF}	7		ns typ	R_L = 300 Ω, C_L = 35 pF
		12	ns max	V_S = 2 V; see Figure 14
Break-Before-Make Time Delay, t_D	7		ns typ	R_L = 300 Ω, C_L = 35 pF
(ADG713 Only)		1	ns min	V_{S1} = V_{S2} = 2 V; see Figure 15
Charge Injection	3		pC typ	V_S = 1.5 V; R_S = 0 Ω, C_L = 1 nF; see Figure 16
Off Isolation	−58		dB typ	R_L = 50 Ω, C_L = 5 pF, f = 10 MHz
	−78		dB typ	R_L = 50 Ω, C_L = 5 pF, f = 1 MHz; see Figure 17
Channel-to-Channel Crosstalk	−90		dB typ	R_L = 50 Ω, C_L = 5 pF, f = 10 MHz; see Figure 18
Bandwidth −3 dB	200		MHz typ	R_L = 50 Ω, C_L = 5 pF; see Figure 19
C_S	10		pF typ	
C_D	10		pF typ	
C_D, C_S (On)	22		pF typ	
POWER REQUIREMENTS				V_{DD} = +3.3 V
I_{DD}	0.001		µA typ	Digital inputs = 0 V or 3 V
		1.0	µ max	

[1] Guaranteed by design, not subject to production test.

ABSOLUTE MAXIMUM RATINGS

T_A = +25°C, unless otherwise noted.

Table 3.

Parameter	Rating
V_{DD} to GND	−0.3 V to +6 V
Analog, Digital Inputs[1]	−0.3 V to V_{DD} +0.3 V or 30 mA, whichever occurs first
Continuous Current, S or D	30 mA
Peak Current, S or D	100 mA (Pulsed at 1 ms, 10% duty cycle maximum)
Operating Temperature Range	−40°C to +85°C
Storage Temperature Range	−65°C to +150°C
Junction Temperature	150°C
TSSOP Package, Power Dissipation	430 mW
θ_{JA} Thermal Impedance	150°C/W
θ_{JC} Thermal Impedance	27°C/W
SOIC Package, Power Dissipation	520 mW
θ_{JA} Thermal Impedance	125°C/W
θ_{JC} Thermal Impedance	42°C/W
Lead Temperature, Soldering	
Vapor Phase (60 sec)	215°C
Infrared (15 sec)	220°C
Soldering(Pb-Free)	
Reflow, Peak Temperature	260(+0/−5)°C
Time at Peak Temperature	20 sec to 40 sec
ESD	2 kV

[1] Overvoltages at IN, S or D will be clamped by internal diodes. Currents should be limited to the maximum ratings given.

Stresses above those listed under Absolute Maximum Ratings may cause permanent damage to the device. This is a stress rating only; functional operation of the device at these or any other conditions above those indicated in the operational section of this specification is not implied. Exposure to absolute maximum rating conditions for extended periods may affect device reliability.

Only one absolute maximum rating may be applied at any one time.

ESD CAUTION

ESD (electrostatic discharge) sensitive device. Charged devices and circuit boards can discharge without detection. Although this product features patented or proprietary protection circuitry, damage may occur on devices subjected to high energy ESD. Therefore, proper ESD precautions should be taken to avoid performance degradation or loss of functionality.

PIN CONFIGURATION AND FUNCTION DESCRIPTIONS

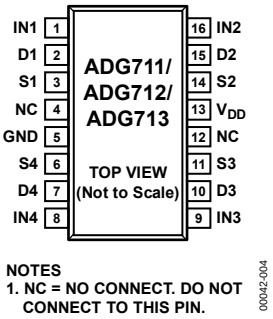

Figure 2. Pin Configuration

Table 4.

Pin Number	Mnemonic	Description
1	IN1	Digital Control Input. Its logic state controls the status of the Switch S1-D1.
2	D1	Drain Pin. Can be used as input or output.
3	S1	Source Pin. Can be used as input or output.
4	NC	Not internally connected.
5	GND	The most negative power supply pin.
6	S4	Source Pin. Can be used as input or output.
7	D4	Drain Pin. Can be used as input or output.
8	IN4	Digital Control Input. Its logic state controls the status of the Switch S4-D4.
9	IN3	Digital Control Input. Its logic state controls the status of the Switch S3-D3.
10	D3	Drain Pin. Can be used as input or output.
11	S3	Source Pin. Can be used as input or output.
12	NC	Not internally connected.
13	V_{DD}	The most positive power supply pin.
14	S2	Source Pin. Can be used as input or output.
15	D2	Drain Pin. Can be used as input or output.
16	IN2	Digital Control Input. Its logic state controls the status of the Switch S3-D3.

Table 5. Truth Table (ADG711/ADG712)

ADG711 In	ADG712 In	Switch Condition
0	1	On
1	0	Off

Table 6. Truth Table (ADG713)

Logic	Switch 1, 4	Switch 2, 3
0	Off	On
1	On	Off

TYPICAL PERFORMANCE CHARACTERISTICS

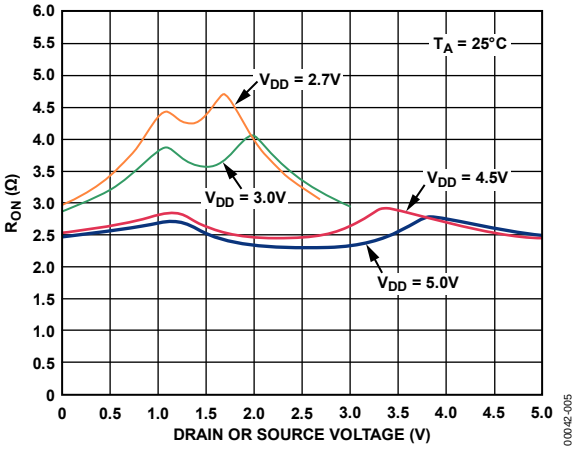

Figure 3. On Resistance as a Function of V_D (V_S)

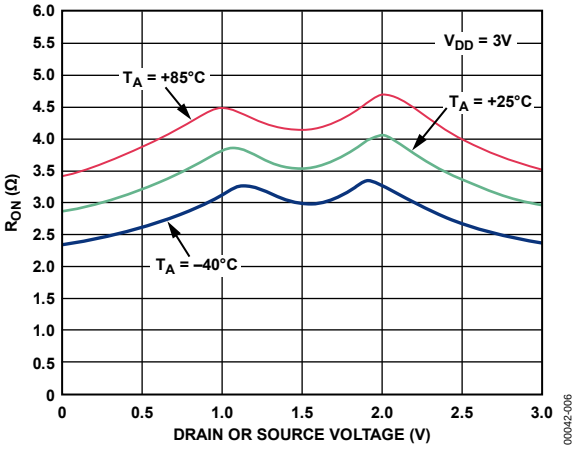

Figure 4. On Resistance as a Function of V_D (V_S) for Different Temperatures $V_{DD} = 3$ V

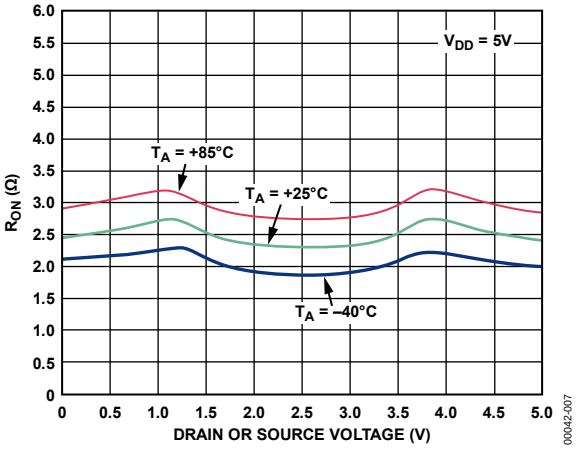

Figure 5. On Resistance as a Function of V_D (V_S) for Different Temperatures $V_{DD} = 5$ V

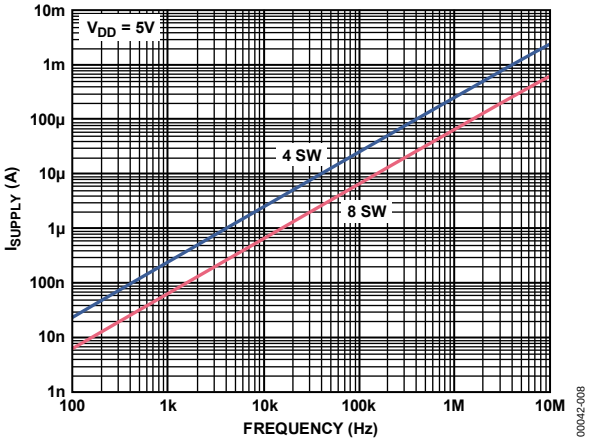

Figure 6. Supply Current vs. Input Switching Frequency

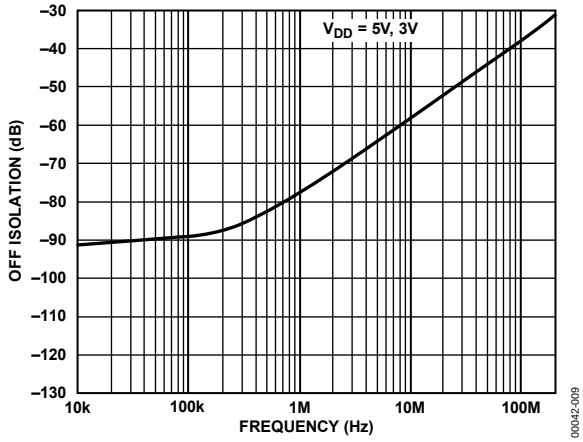

Figure 7. Off Isolation vs. Frequency

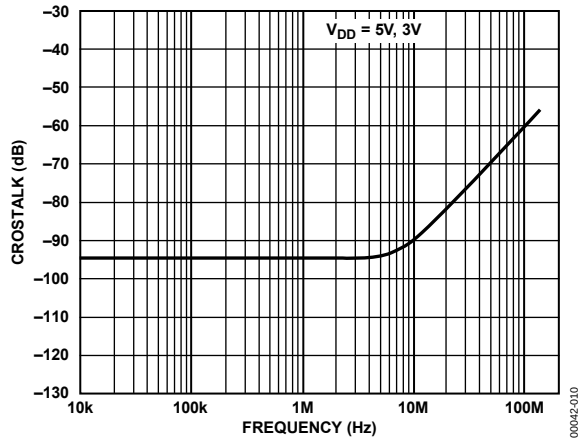

Figure 8. Crosstalk vs. Frequency

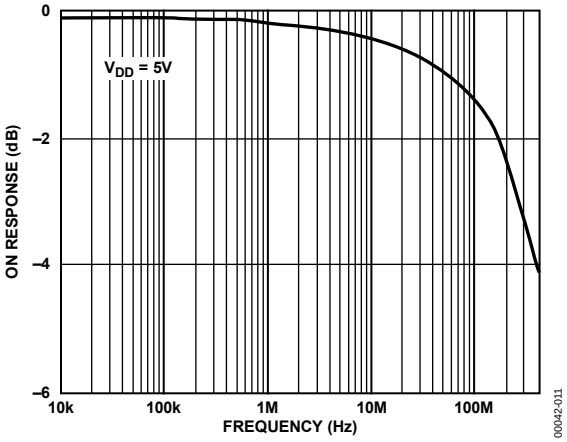

Figure 9. On Response vs. Frequency

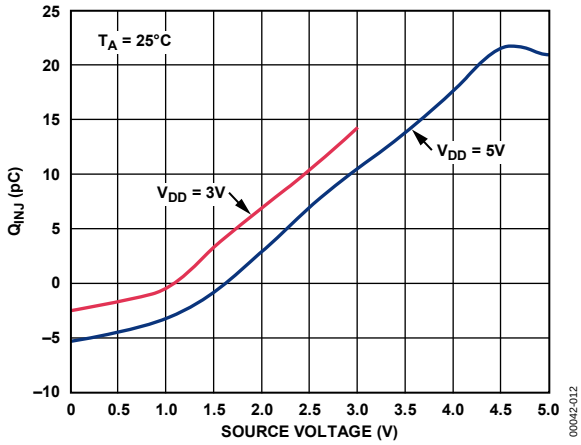

Figure 10. Charge Injection vs. Source Voltage

TEST CIRCUITS

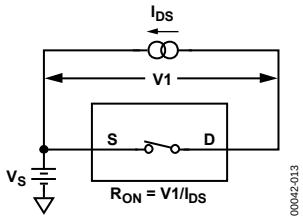

Figure 11. On Resistance

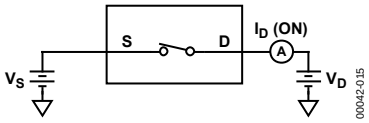

Figure 13. On Leakage

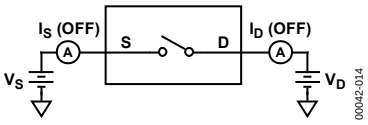

Figure 12. Off Leakage

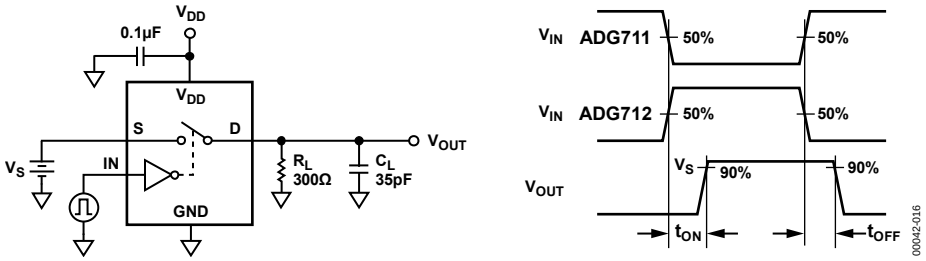

Figure 14. Switching Times

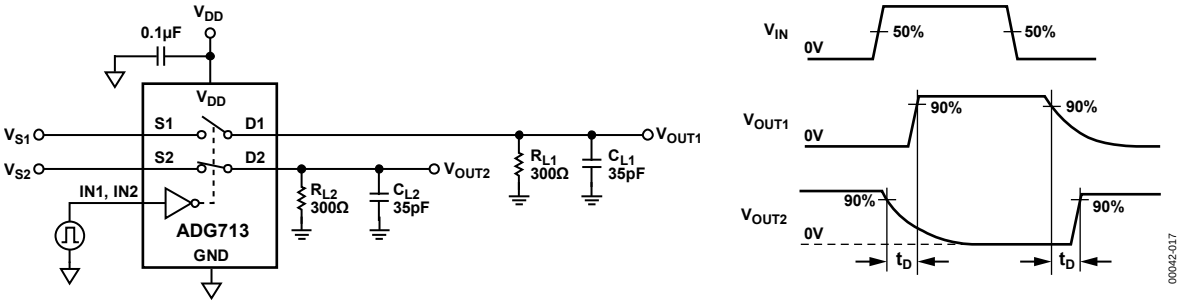

Figure 15. Break-Before-Make Time Delay, t_D

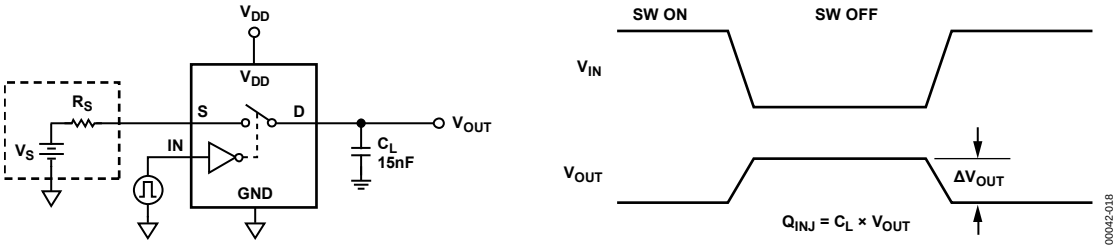

Figure 16. Charge Injection

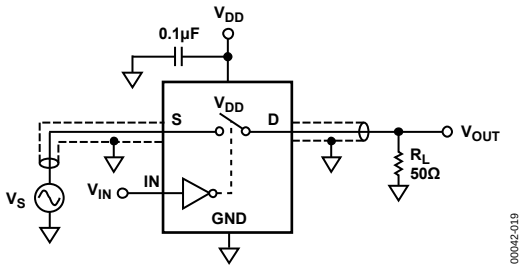

Figure 17. Off Isolation

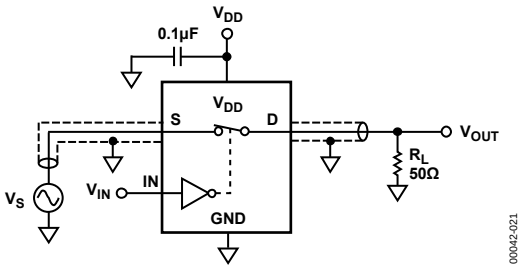

Figure 19. Bandwidth

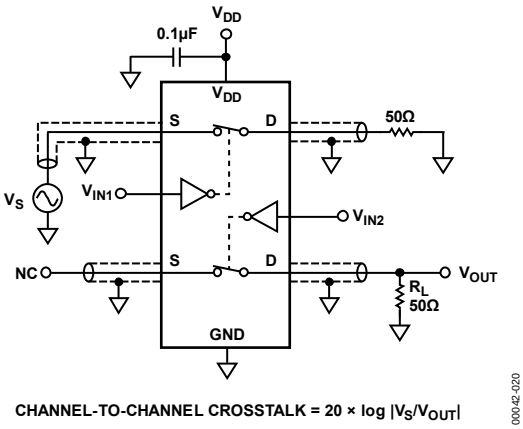

CHANNEL-TO-CHANNEL CROSSTALK = 20 × log |V_S/V_{OUT}|

Figure 18. Channel-to-Channel Crosstalk

TERMINOLOGY

R_{ON}
Ohmic resistance between D and S.

ΔR_{ON}
On resistance match between any two channels, ie., R_{ON}max – R_{ON}min.

$R_{FLAT(ON)}$
Flatness is defined as the difference between the maximum and minimum value of on resistance as measured over the specified analog signal range.

I_S (OFF)
Source leakage current with the switch off.

I_D (OFF)
Drain leakage current with the switch off.

I_D, I_S (ON)
Channel leakage current with the switch on.

V_D (V_S)
Analog voltage on Terminals D, S.

C_S (OFF)

Off switch source capacitance.

C_D (OFF)
Off switch drain capacitance.

C_D, C_S (ON)
On switch capacitance.

t_{ON}
Delay between applying the digital control input and the output switching on.

t_{OFF}
Delay between applying the digital control input and the output switching off.

t_D
Off time or on time measured between the 90% points of both switches, when switching from one address state to another (ADG713 only).

Crosstalk
A measure of unwanted signal that is coupled through from one channel to another as a result of parasitic capacitance.

Off Isolation
A measure of unwanted signal coupling through an off switch.

Charge Injection
A measure of the glitch impulse transferred from the digital input to the analog output during switching.

Bandwidth
The frequency at which the output is attenuated by 3 dB.

On Response
The frequency response of the on switch.

APPLICATIONS INFORMATION

Figure 20 illustrates a photodetector circuit with programmable gain. An AD820 is used as the output operational amplifier. With the resistor values shown in the circuit, and using different combinations of the switches, gain in the range of 2 to 16 can be achieved.

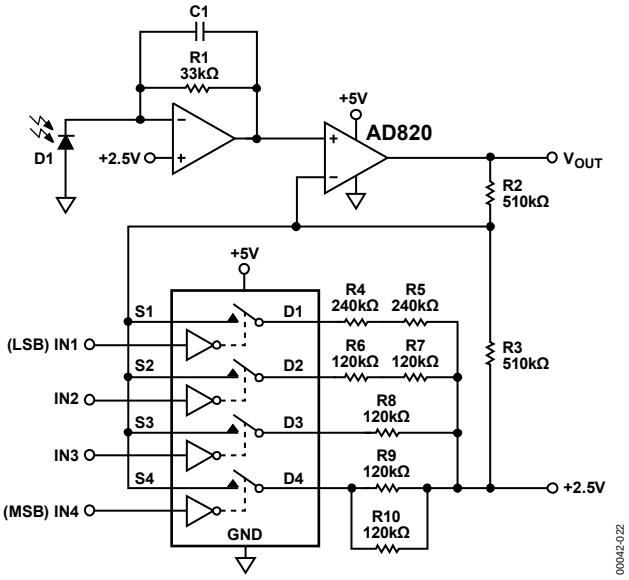

Figure 20. Photodetector Circuit with Programmable Gain

OUTLINE DIMENSIONS

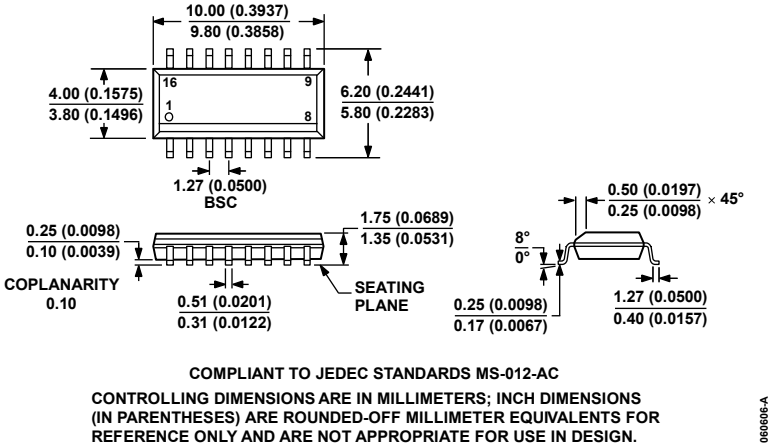

Figure 21. 16-Lead Standard Small Outline Package [SOIC]
Narrow Body
(R-16)
Dimensions shown in millimeters and (inches)

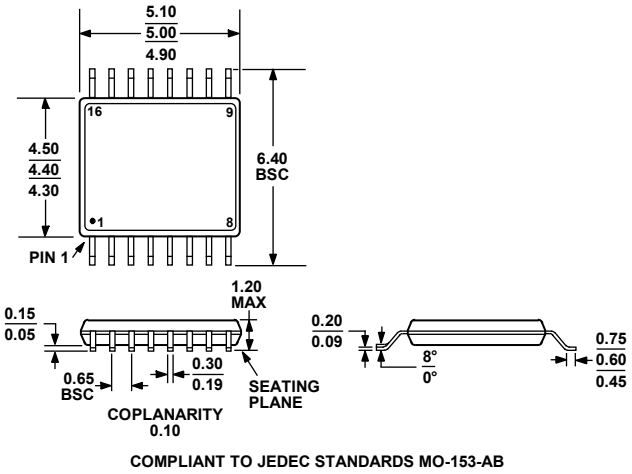

Figure 22. 16-Lead Thin Shrink Small Outline Package [TSSOP]
(RU-16)
Dimensions shown in millimeters

ORDERING GUIDE

Model[1, 2]	Temperature range	Package Description	Package Option
ADG711BR	−40°C to +85°C	Standard Small Outline(SOIC)	R-16
ADG711BR-REEL	−40°C to +85°C	Standard Small Outline(SOIC)	R-16
ADG711BR-REEL7	−40°C to +85°C	Standard Small Outline(SOIC)	R-16
ADG711BRZ	−40°C to +85°C	Standard Small Outline(SOIC)	R-16
ADG711BRZ-REEL	−40°C to +85°C	Standard Small Outline(SOIC)	R-16
ADG711BRZ-REEL7	−40°C to +85°C	Standard Small Outline(SOIC)	R-16
ADG711BRU	−40°C to +85°C	Thin Shrink Small Outline(TSSOP)	RU-16
ADG711BRU-REEL	−40°C to +85°C	Thin Shrink Small Outline(TSSOP)	RU-16
ADG711BRU-REEL7	−40°C to +85°C	Thin Shrink Small Outline(TSSOP)	RU-16
ADG711BRUZ	−40°C to +85°C	Thin Shrink Small Outline(TSSOP)	RU-16
ADG711BRUZ-REEL	−40°C to +85°C	Thin Shrink Small Outline(TSSOP)	RU-16
ADG711BRUZ-REEL7	−40°C to +85°C	Thin Shrink Small Outline(TSSOP)	RU-16
ADG711WBRUZ-REEL	−40°C to +85°C	Thin Shrink Small Outline(TSSOP)	RU-16
ADG712BR	−40°C to +85°C	Standard Small Outline(SOIC)	R-16
ADG712BR-REEL	−40°C to +85°C	Standard Small Outline(SOIC)	R-16
ADG712BR-REEL7	−40°C to +85°C	Standard Small Outline(SOIC)	R-16
ADG712BRZ	−40°C to +85°C	Standard Small Outline(SOIC)	R-16
ADG712BRZ-REEL	−40°C to +85°C	Standard Small Outline(SOIC)	R-16
ADG712BRZ-REEL7	−40°C to +85°C	Standard Small Outline(SOIC)	R-16
ADG712BRU	−40°C to +85°C	Thin Shrink Small Outline(TSSOP)	RU-16
ADG712BRU-REEL	−40°C to +85°C	Thin Shrink Small Outline(TSSOP)	RU-16
ADG712BRU-REEL7	−40°C to +85°C	Thin Shrink Small Outline(TSSOP)	RU-16
ADG712BRUZ	−40°C to +85°C	Thin Shrink Small Outline(TSSOP)	RU-16
ADG712BRUZ-REEL	−40°C to +85°C	Thin Shrink Small Outline(TSSOP)	RU-16
ADG712BRUZ-REEL7	−40°C to +85°C	Thin Shrink Small Outline(TSSOP)	RU-16
ADG713BR	−40°C to +85°C	Standard Small Outline(SOIC)	R-16
ADG713BRZ	−40°C to +85°C	Standard Small Outline(SOIC)	R-16
ADG713BRZ-REEL	−40°C to +85°C	Standard Small Outline(SOIC)	R-16
ADG713BRZ-REEL7	−40°C to +85°C	Standard Small Outline(SOIC)	R-16
ADG713BRU	−40°C to +85°C	Thin Shrink Small Outline(TSSOP)	RU-16
ADG713BRU-REEL	−40°C to +85°C	Thin Shrink Small Outline(TSSOP)	RU-16
ADG713BRU-REEL7	−40°C to +85°C	Thin Shrink Small Outline(TSSOP)	RU-16
ADG713BRUZ	−40°C to +85°C	Thin Shrink Small Outline(TSSOP)	RU-16
ADG713BRUZ-REEL	−40°C to +85°C	Thin Shrink Small Outline(TSSOP)	RU-16
ADG713BRUZ-REEL7	−40°C to +85°C	Thin Shrink Small Outline(TSSOP)	RU-16

[1] Z = RoHS Compliant Part.
[2] W = Qualified for Automotive Applications.

AUTOMOTIVE PRODUCTS

The AD711W models are available with controlled manufacturing to support the quality and reliability requirements of automotive applications. Note that these automotive models may have specifications that differ from the commercial models; therefore, designers should review the Specifications section of this data sheet carefully. Only the automotive grade products shown are available for use in automotive applications. Contact your local Analog Devices account representative for specific product ordering information and to obtain the specific Automotive Reliability reports for these models.

NOTES

NOTES

©2004–2011 Analog Devices, Inc. All rights reserved. Trademarks and registered trademarks are the property of their respective owners.
D00042-0-6/11(B)

О компании

ООО "ТрейдЭлектроникс" - это оперативные поставки широкого спектра электронных компонентов отечественного и импортного производства напрямую от производителей и с крупнейших мировых складов. Реализуемая нашей компанией продукция насчитывает более полумиллиона наименований.

Благодаря этому наша компания предлагает к поставке практически не ограниченный ассортимент компонентов как оптовыми, мелкооптовыми партиями, так и в розницу.

Наличие собственной эффективной системы логистики обеспечивает надежную поставку продукции по конкурентным ценам в точно указанные сроки.

Срок поставки со стоков в **Европе и Америке – от 3 до 14 дней.**

Срок поставки из **Азии – от 10 дней.**

Благодаря развитой сети поставщиков, помогаем в поиске и приобретении экзотичных или снятых с производства компонентов.

Предоставляем спец цены на элементы для создания инженерных сэмплов.

Упорный труд, качественный результат дают нам право быть уверенными в себе и надежными для наших клиентов.

Наша компания это:

- Гарантия качества поставляемой продукции
- Широкий ассортимент
- Минимальные сроки поставок
- Техническая поддержка
- Подбор комплектации
- Индивидуальный подход
- Гибкое ценообразование

Наша организация особенно сильна в поставках модулей, микросхем, пассивных компонентов, ксайленсах (XC), EPF, EPM и силовой электроники.

Большой выбор предлагаемой продукции, различные виды оплаты и доставки, позволят Вам сэкономить время и получить максимум выгоды от сотрудничества с нами!

Trade Electronics.ru

гарантия бесперебойности производства и качества выпускаемой продукции

Перечень производителей, продукцию которых мы поставляем на российский рынок

AMD
ANALOG DEVICES
BOURNS
Coilcraft
élantec Semiconductor, Inc.
HARRIS
Infineon
JRC
MICREL
MOTOROLA
nichicon
PHILIPS
ROHM
SGS-THOMSON
Sipex
TAIYO YUDEN
TOKO
ZILOG
Winbond
Allegro
ATMEL
BURR - BROWN
EXAR
HITACHI
intel
Lattice
muRata
OKI
QUALCOMM
SAMSUNG
SHARP
SONY
TDK
TOSHIBA
KYOCERA
ALTERA
AVX
CITILYST
CYPRESS
FAIRCHILD SEMICONDUCTOR
HOLTEK
International IOR Rectifier
LINEAR TECHNOLOGY
MITSUBISHI
National Semiconductor
ON Semiconductor
REALTEK
SANYO
SHINDENGEN
SGS
TECCOR
TUNDRA
XILINX
Amphenol
Bay Linear
CIRRUS LOGIC
DALLAS
FUJITSU
IDT
intersil
MAXIM
molex
NEC
Panasonic
RENESAS
SII
SIEMENS
ST
Texas Instruments
VISHAY
ZETEX SEMICONDUCTORS

Trade Electronics.ru

гарантия бесперебойности производства и качества выпускаемой продукции

С удовольствием будем прорабатывать для Вас поставки всех необходимых компонентов по текущим запросам для скорейшего выявления групп элементов, по которым сотрудничество именно с нашей компанией будет для Вас максимально выгодным!

С уважением,

Менеджер отдела продаж ООО

«Трейд Электроникс»

Шишлаков Евгений

8 (495)668-30-28 доб 169

manager28@tradeelectronics.ru

http://www.tradeelectronics.ru/