DATA SHEET

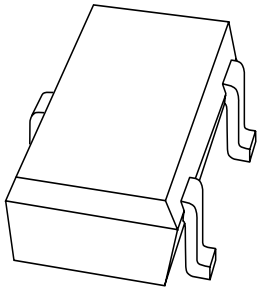

2PB1219A
PNP general purpose transistor

Product data sheet
Supersedes data of 1997 Mar 25

1999 Apr 12

founded by Philips

PNP general purpose transistor 2PB1219A

FEATURES

- High current (max. 500 mA)
- Low voltage (max. 50 V)
- Low collector-emitter saturation voltage (max. 600 mV).

APPLICATIONS

- General purpose switching and amplification.

DESCRIPTION

PNP transistor in a SOT323; SC70 plastic package.
NPN complement: 2PD1820A.

MARKING

TYPE NUMBER	MARKING CODE(1)
2PB1219AQ	D∗Q
2PB1219AR	D∗R
2PB1219AS	D∗S

Note

1. ∗ = - : Made in Hong Kong.
   ∗ = t : Made in Malaysia.

PINNING

PIN	DESCRIPTION
1	base
2	emitter
3	collector

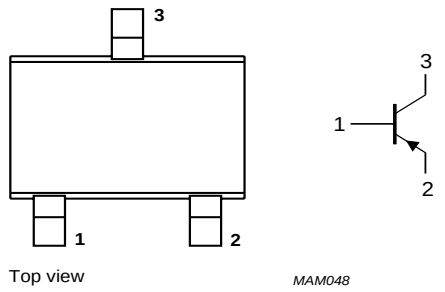

Fig.1 Simplified outline (SOT323; SC70) and symbol.

LIMITING VALUES

In accordance with the Absolute Maximum Rating System (IEC 134).

SYMBOL	PARAMETER	CONDITIONS	MIN.	MAX.	UNIT
V_{CBO}	collector-base voltage	open emitter	–	–60	V
V_{CEO}	collector-emitter voltage	open base	–	–50	V
V_{EBO}	emitter-base voltage	open collector	–	–5	V
I_C	collector current (DC)		–	–500	mA
I_{CM}	peak collector current		–	–1	A
I_{BM}	peak base current		–	–200	mA
P_{tot}	total power dissipation	$T_{amb} \leq 25$ °C; note 1	–	200	mW
T_{stg}	storage temperature		–65	+150	°C
T_j	junction temperature		–	150	°C
T_{amb}	operating ambient temperature		–65	+150	°C

Note

1. Refer to SOT323; SC70 standard mounting conditions.

THERMAL CHARACTERISTICS

SYMBOL	PARAMETER	CONDITIONS	VALUE	UNIT
$R_{th\ j\text{-}a}$	thermal resistance from junction to ambient	note 1	625	K/W

Note

1. Refer to SOT323; SC70 standard mounting conditions.

CHARACTERISTICS

T_{amb} = 25 °C unless otherwise specified.

SYMBOL	PARAMETER	CONDITIONS	MIN.	MAX.	UNIT
I_{CBO}	collector cut-off current	$I_E = 0$; $V_{CB} = -20$ V	–	–100	nA
		$I_E = 0$; $V_{CB} = -20$ V; $T_j = 150$ °C	–	–5	μA
I_{EBO}	emitter cut-off current	$I_C = 0$; $V_{EB} = -4$ V	–	–100	nA
h_{FE}	DC current gain	$I_C = -150$ mA; $V_{CE} = -10$ V; note 1			
	2PB1219AQ		85	170	
	2PB1219AR		120	240	
	2PB1219AS		170	340	
h_{FE}	DC current gain	$I_C = -500$ mA; $V_{CE} = -10$ V; note 1	40	–	
V_{CEsat}	collector-emitter saturation voltage	$I_C = -300$ mA; $I_B = -30$ mA; note 1	–	–600	mV
V_{BEsat}	base-emitter saturation voltage	IC = –300 mA; IB = –30 mA; note 1	–	–1.5	V
C_c	collector capacitance	$I_E = i_e = 0$; $V_{CB} = -10$ V; f = 1 MHz	–	15	pF
f_T	transition frequency	$I_C = 50$ mA; $V_{CE} = -10$ V; f = 100 MHz; note 1			
	2PB1219AQ		100	–	MHz
	2PB1219AR		120	–	MHz
	2PB1219AS		140	–	MHz

Note

1. Pulse test: $t_p \leq 300$ μs; $\delta \leq 0.02$.

PACKAGE OUTLINE

Plastic surface mounted package; 3 leads **SOT323**

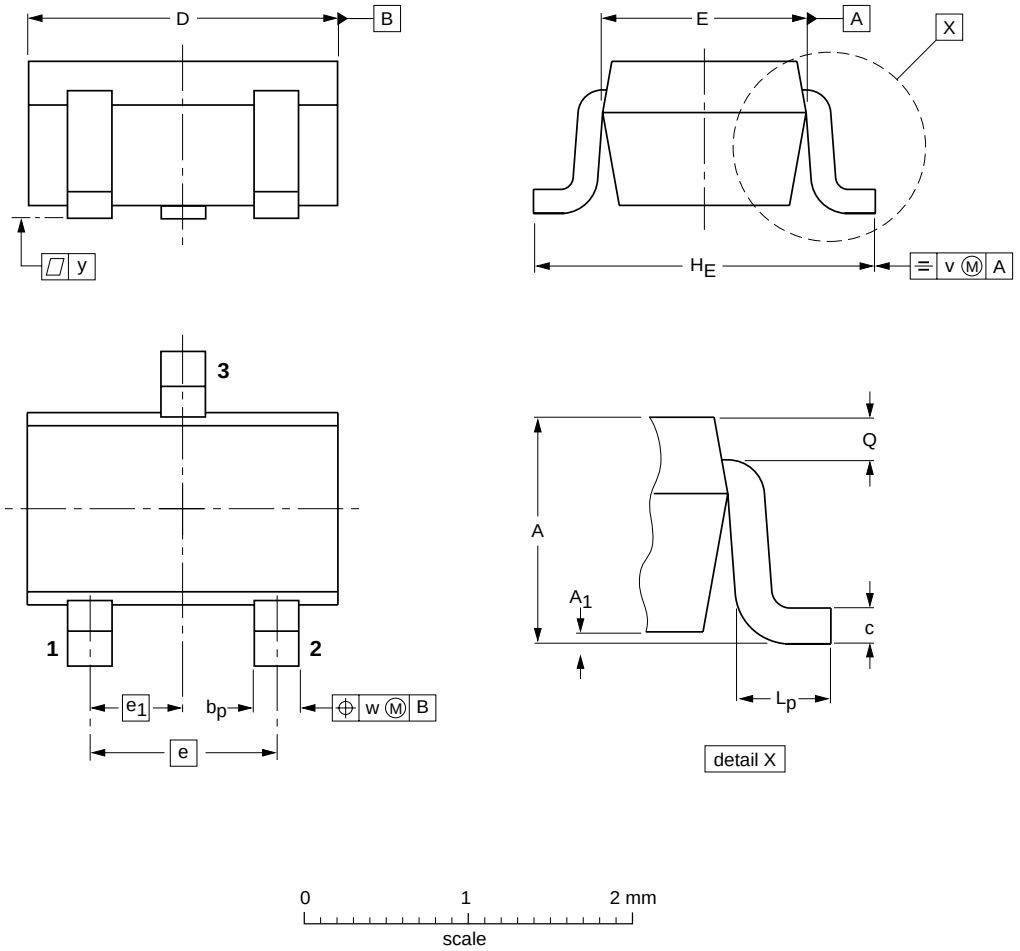

DIMENSIONS (mm are the original dimensions)

UNIT	A	A_1 max	b_p	c	D	E	e	e_1	H_E	L_p	Q	v	w
mm	1.1 0.8	0.1	0.4 0.3	0.25 0.10	2.2 1.8	1.35 1.15	1.3	0.65	2.2 2.0	0.45 0.15	0.23 0.13	0.2	0.2

OUTLINE VERSION	REFERENCES				EUROPEAN PROJECTION	ISSUE DATE
	IEC	JEDEC	EIAJ			
SOT323			SC-70			97-02-28

DATA SHEET STATUS

DOCUMENT STATUS[1]	PRODUCT STATUS[2]	DEFINITION
Objective data sheet	Development	This document contains data from the objective specification for product development.
Preliminary data sheet	Qualification	This document contains data from the preliminary specification.
Product data sheet	Production	This document contains the product specification.

Notes

1. Please consult the most recently issued document before initiating or completing a design.
2. The product status of device(s) described in this document may have changed since this document was published and may differ in case of multiple devices. The latest product status information is available on the Internet at URL http://www.nxp.com.

DISCLAIMERS

General — Information in this document is believed to be accurate and reliable. However, NXP Semiconductors does not give any representations or warranties, expressed or implied, as to the accuracy or completeness of such information and shall have no liability for the consequences of use of such information.

Right to make changes — NXP Semiconductors reserves the right to make changes to information published in this document, including without limitation specifications and product descriptions, at any time and without notice. This document supersedes and replaces all information supplied prior to the publication hereof.

Suitability for use — NXP Semiconductors products are not designed, authorized or warranted to be suitable for use in medical, military, aircraft, space or life support equipment, nor in applications where failure or malfunction of an NXP Semiconductors product can reasonably be expected to result in personal injury, death or severe property or environmental damage. NXP Semiconductors accepts no liability for inclusion and/or use of NXP Semiconductors products in such equipment or applications and therefore such inclusion and/or use is at the customer's own risk.

Applications — Applications that are described herein for any of these products are for illustrative purposes only. NXP Semiconductors makes no representation or warranty that such applications will be suitable for the specified use without further testing or modification.

Limiting values — Stress above one or more limiting values (as defined in the Absolute Maximum Ratings System of IEC 60134) may cause permanent damage to the device. Limiting values are stress ratings only and operation of the device at these or any other conditions above those given in the Characteristics sections of this document is not implied. Exposure to limiting values for extended periods may affect device reliability.

Terms and conditions of sale — NXP Semiconductors products are sold subject to the general terms and conditions of commercial sale, as published at http://www.nxp.com/profile/terms, including those pertaining to warranty, intellectual property rights infringement and limitation of liability, unless explicitly otherwise agreed to in writing by NXP Semiconductors. In case of any inconsistency or conflict between information in this document and such terms and conditions, the latter will prevail.

No offer to sell or license — Nothing in this document may be interpreted or construed as an offer to sell products that is open for acceptance or the grant, conveyance or implication of any license under any copyrights, patents or other industrial or intellectual property rights.

Export control — This document as well as the item(s) described herein may be subject to export control regulations. Export might require a prior authorization from national authorities.

Quick reference data — The Quick reference data is an extract of the product data given in the Limiting values and Characteristics sections of this document, and as such is not complete, exhaustive or legally binding.

NXP Semiconductors

Customer notification

This data sheet was changed to reflect the new company name NXP Semiconductors. No changes were made to the content, except for the legal definitions and disclaimers.

Contact information

For additional information please visit: **http://www.nxp.com**
For sales offices addresses send e-mail to: **salesaddresses@nxp.com**

© NXP B.V. 2009

All rights are reserved. Reproduction in whole or in part is prohibited without the prior written consent of the copyright owner.

The information presented in this document does not form part of any quotation or contract, is believed to be accurate and reliable and may be changed without notice. No liability will be accepted by the publisher for any consequence of its use. Publication thereof does not convey nor imply any license under patent- or other industrial or intellectual property rights.

Printed in The Netherlands 115002/00/03/pp6 Date of release: 1999 Apr 12 Document order number: 9397 750 05589

founded by

PHILIPS

Mouser Electronics

Authorized Distributor

Click to View Pricing, Inventory, Delivery & Lifecycle Information:

NXP:

2PB1219AQ /T3 2PB1219AQ T/R 2PB1219AR /T3 2PB1219AR T/R 2PB1219AS /T3 2PB1219AS T/R
2PB1219AQ,135 2PB1219AQ,115 2PB1219AR,135 2PB1219AR,115 2PB1219AS,135 2PB1219AS,115

О компании

ООО "ТрейдЭлектроникс" - это оперативные поставки широкого спектра электронных компонентов отечественного и импортного производства напрямую от производителей и с крупнейших мировых складов. Реализуемая нашей компанией продукция насчитывает более полумиллиона наименований.

Благодаря этому наша компания предлагает к поставке практически не ограниченный ассортимент компонентов как оптовыми, мелкооптовыми партиями, так и в розницу.

Наличие собственной эффективной системы логистики обеспечивает надежную поставку продукции по конкурентным ценам в точно указанные сроки.

Срок поставки со стоков в **Европе и Америке – от 3 до 14 дней.**

Срок поставки из **Азии – от 10 дней.**

Благодаря развитой сети поставщиков, помогаем в поиске и приобретении экзотичных или снятых с производства компонентов.

Предоставляем спец цены на элементы для создания инженерных сэмплов.

Упорный труд, качественный результат дают нам право быть уверенными в себе и надежными для наших клиентов.

Наша компания это:

- Гарантия качества поставляемой продукции
- Широкий ассортимент
- Минимальные сроки поставок
- Техническая поддержка
- Подбор комплектации
- Индивидуальный подход
- Гибкое ценообразование

Наша организация особенно сильна в поставках модулей, микросхем, пассивных компонентов, ксайленсах (XC), EPF, EPM и силовой электроники.

Большой выбор предлагаемой продукции, различные виды оплаты и доставки, позволят Вам сэкономить время и получить максимум выгоды от сотрудничества с нами!

Trade Electronics.ru

гарантия бесперебойности производства и качества выпускаемой продукции

Перечень производителей, продукцию которых мы поставляем на российский рынок

AMD
ANALOG DEVICES
BOURNS
Coilcraft
élantec Semiconductor, Inc.
HARRIS
Infineon
JRC
MICREL
MOTOROLA
nichicon
PHILIPS
ROHM
SGS-THOMSON
Sipex
TAIYO YUDEN
TOKO
ZILOG
Winbond
Allegro
ATMEL
BURR - BROWN
EXAR
HITACHI
intel
Lattice
muRata
OKI
QUALCOMM
SAMSUNG
SHARP
SONY
TDK
TOSHIBA
KYOCERA
ALTERA
AVX
CITILYST
CYPRESS
FAIRCHILD SEMICONDUCTOR
HOLTEK
International IOR Rectifier
LINEAR TECHNOLOGY
MITSUBISHI
National Semiconductor
ON Semiconductor
REALTEK
SANYO
SHINDENGEN
SGS
TECCOR
TUNDRA
XILINX
Amphenol
Bay Linear
CIRRUS LOGIC
DALLAS
FUJITSU
IDT
intersil
MAXIM
molex
NEC
Panasonic
RENESAS
SII
SIEMENS
ST
Texas Instruments
VISHAY
ZETEX SEMICONDUCTORS

Trade Electronics.ru

гарантия бесперебойности производства и качества выпускаемой продукции

С удовольствием будем прорабатывать для Вас поставки всех необходимых компонентов по текущим запросам для скорейшего выявления групп элементов, по которым сотрудничество именно с нашей компанией будет для Вас максимально выгодным!

С уважением,

Менеджер отдела продаж ООО

«Трейд Электроникс»

Шишлаков Евгений

8 (495)668-30-28 доб 169

manager28@tradeelectronics.ru

http://www.tradeelectronics.ru/