The product information in this catalog is for reference only. Please request the Engineering Drawing for the most current and accurate design information.
All non-RoHS products have been discontinued, or will be discontinued soon. Please check the products status on the Hirose website RoHS search at www.hirose-connectors.com, or contact your Hirose sales representative.

FINGER-LOCK COAXIAL CONNECTORS

(LOW-PROFILE MICROMINIATURE HIGH-FREQUENCY CONNECTORS)

D.C.~1500MHz

GENERAL

The FL (finger-lock) series connectors are low-profile microminiature coaxial connectors intended for high-density packaging of components on printed circuit boards. The FL series is ideal for high-density circuit board wiring in signal transmission applications at high frequencies up to 1 GHz.

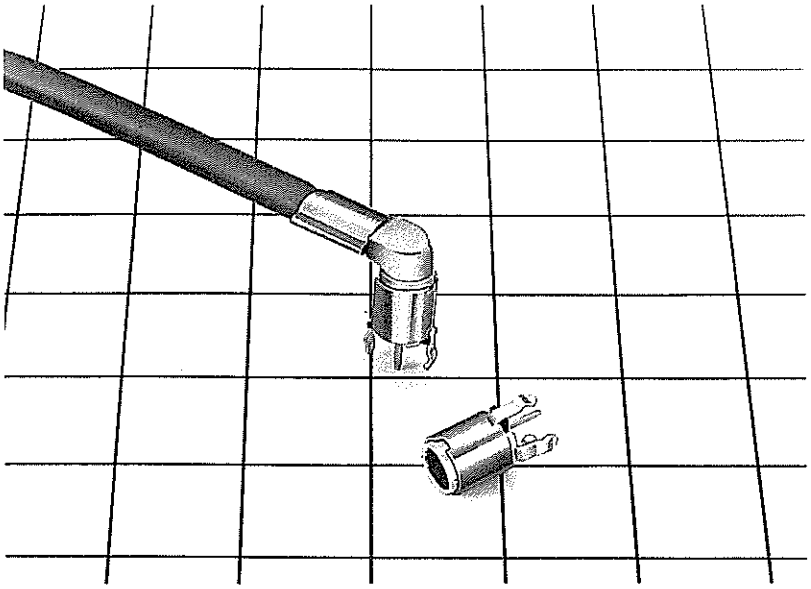

FEATURES

(1) Low Profile.
Fully mated, the FL series is only 10.5 mm, (0.413") in height, with a maximum diameter of 5 mm (0.197).

(2) Low Cost.
Unique design and production methods assure quality and competitive pricing.

(3) Fully Solderless Termination.
The FL series plug uses solderless crimping for both center conductors and outer conductors thus providing improved reliability and savings in assembly time.

(4) High Reliability.
An exclusive Hirose interface design, using combined axial forces, allows consistent performance under vibration and assures simple and positive locking.

(5) High-level Matching.
Maximum V.S.W.R. is only 1.2 at frequencies up to 1 GHz.

(6) Recommended Cable.
Cable #1.5D-QEW and 1.5C-QEW•CW, manufactured by Fujikura Electric Wires Co., Ltd., are recommended for optimal performance. Contact factory for information regarding use with other cable.

APPLICATIONS

Typical applications include cellular telephones, radio communications equipment, electronic measuring instruments, CATV, control units, etc.

The product information in this catalog is for reference only. Please request the Engineering Drawing for the most current and accurate design information.
All non-RoHS products have been discontinued, or will be discontinued soon. Please check the products status on the Hirose website RoHS search at www.hirose-connectors.com, or contact your Hirose sales representative.

MATERIAL AND FINISH

Part name	Material	Finish
Shell	Brass or phosphor bronze	Silver plating
Center contact (male)	Brass	Gold plating
Center contact (female)	Phosphor bronze	Gold plating
Insulation	Polybutylene terephthalate (PBT)	Black

PERFORMANCE CHARACTERISTICS

(1) General performance characteristics

Item	Specification
Characteristic impedance	50Ω
Insulation resistance	1000MΩ or more (at 250 VDC)
Contact resistance	10 mΩ or less for both center and outer conductors (at 1 ADC)
Withstanding voltage	250 VAC (rms) for one minute
Coupling/removal force	300 gf or more
Life of contacts	50 times of use

(2) V.S.W.R.

a. When used on 50Ω lines

From DC to 1 GHz 1.2 or less
From 1 GHz to 1.5 GHz 1.25 or less

b. When used on 75Ω lines

With FL-LP-1.5C•QEW•CW connectors, the FL series can also be used on 75Ω lines. However, the operating frequency is limited to a maximum of 500 MHz since the characteristic impedance of the connector body is 50 Ω. V.S.W.R at this time is as follows:

From DC to 140 MHz 1.15 or less
From 140 MHz to 500 MHz 1.25 or less

SPECIFIED CABLE

The dimensions, construction, and materials of the cables for use with the FL series are as follows (use only these cables, since equivalent cables produced by other manufacturers differ in dimensional tolerance, material, etc.):

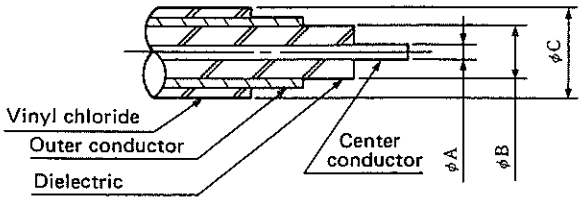

Cable name	Dimensions			Materials			Cable manufacturer
	φA	φB	φC	Center conductor	Dielectric	Outer conductor	
1.5D-QEW	7/0.18(0.54)	1.6 ± 0.05	3.4 ± 0.2	Annealed copper wire	Crosslinked polyethylene	Annealed copper wire	Fujikura Electric Wires Co., Ltd.
1.5C-QEW•CW	0.26	1.6 ± 0.05	3.4 ± 0.3	Copper welded wire	Crosslinked polyethylene	Annealed copper wire	Fujikura Electric Wires Co., Ltd.

The product information in this catalog is for reference only. Please request the Engineering Drawing for the most current and accurate design information.
All non-RoHS products have been discontinued, or will be discontinued soon. Please check the products status on the Hirose website RoHS search at www.hirose-connectors.com, or contact your Hirose sales representative.

PLUGS

The following FL series products are available:

HRS No.	Part No.	Applicable cable
CL331-0001-6-40	FL-LP-1.5DW(40)	1.5D-QEW

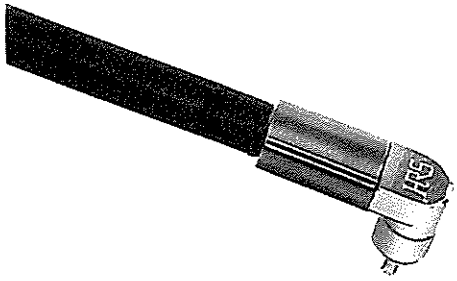

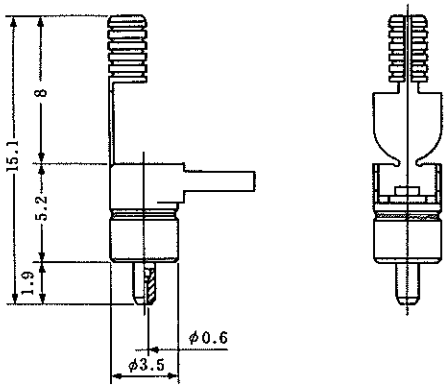

This product is provided with a crimp sleeve.

HRS No.	Part No.	Applicable cable
CL331-0007-2-40	FL-LP-1.5C.QEW.CW(40)	1.5C-QEW.CW

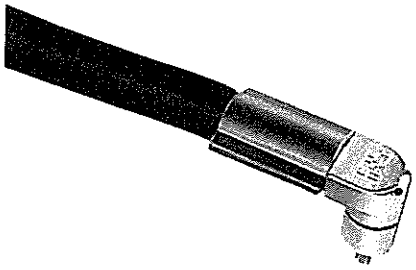

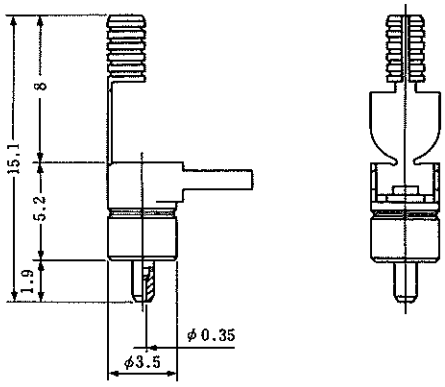

This product is provided with a crimp sleeve.

This connector is specially designed for use with 75Ω cable 1.5C-QEW·CW.

The product information in this catalog is for reference only. Please request the Engineering Drawing for the most current and accurate design information.
All non-RoHS products have been discontinued, or will be discontinued soon. Please check the products status on the Hirose website RoHS search at www.hirose-connectors.com, or contact your Hirose sales representative.

RECEPTACLES

HRS No.	Part No.
331-0066-1	FL-R-PC-11

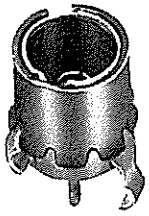

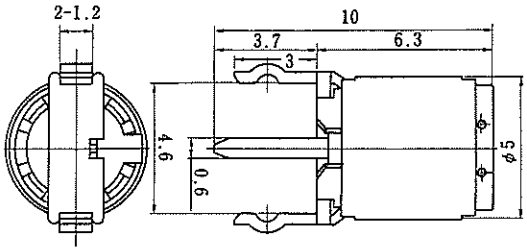

HRS No.	Part No.
331-0065-9	FL-R-PC-10

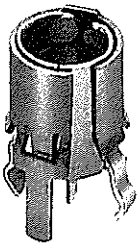

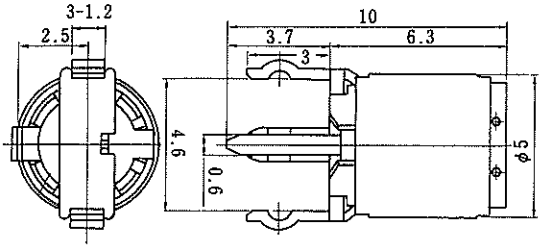

HRS No.	Part No.
331-0053-0	FL-R-PC-(3)

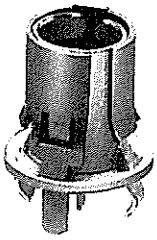

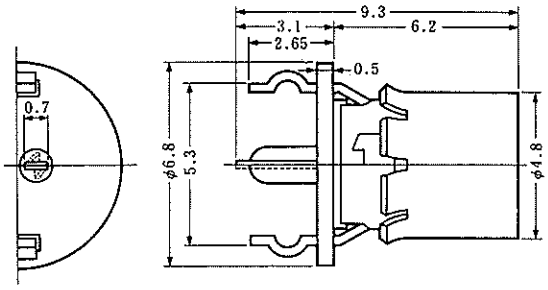

Teflon washer included to prevent potential shorting between connector and PCB traces.

The product information in this catalog is for reference only. Please request the Engineering Drawing for the most current and accurate design information.
All non-RoHS products have been discontinued, or will be discontinued soon. Please check the products status on the Hirose website RoHS search at www.hirose-connectors.com, or contact your Hirose sales representative.

CONVERTER ADAPTERS

For converter adapters for connecting the FL series to other series, see the CL311BWA series.

ATTACHMENTS

HRS No.	Part No.
331-0042-3-40	FL-harness inspection receptacle(40)

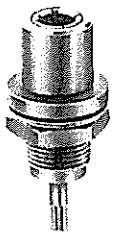

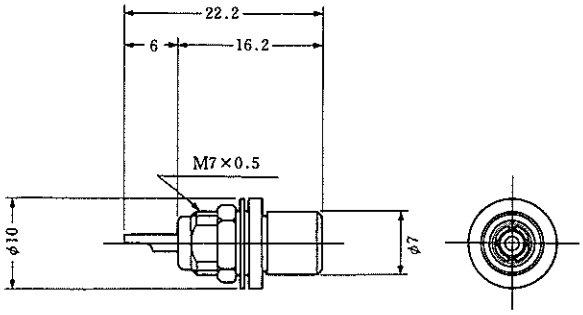

This receptacle is used for checking the continuity, withstand voltages, etc. of harness products.

HRS No.	Part No.
331-0048-0	FL-LP-N2

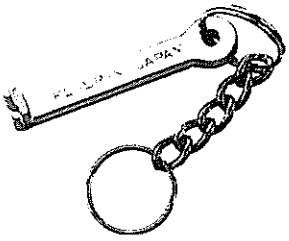

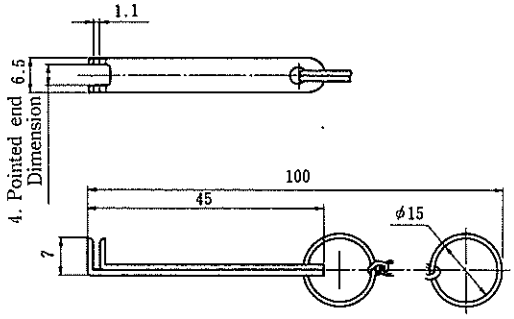

This jig is not suitable for heat contractibility tube shielding with crimping sleeve.

The product information in this catalog is for reference only. Please request the Engineering Drawing for the most current and accurate design information.
All non-RoHS products have been discontinued, or will be discontinued soon. Please check the products status on the Hirose website RoHS search at www.hirose-connectors.com, or contact your Hirose sales representative.

LAYOUT DIAGRAMS FOR PRINTED CIRCUIT BOARDS:

Prepare printed circuit boards in strict accordance with the diagrams shown below. Note that an excessive thru-hole diameter may cause solder to flow onto the printed-circuit-board mounting side during automatic soldering. This solder flow could damage the connector.

Example 1: Square type Land

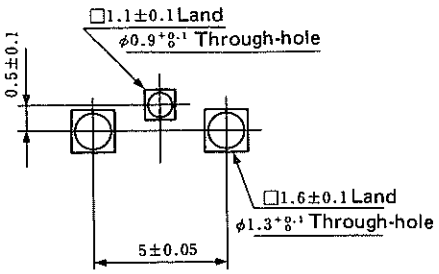

FL-R-PC-11

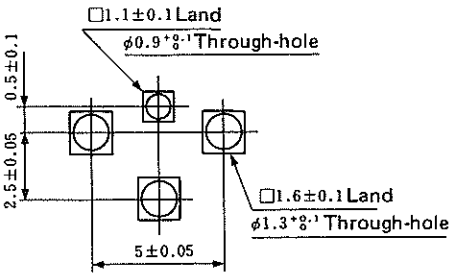

FL-R-PC-10
FL-R-PC(3)

Example 2: Round type Land

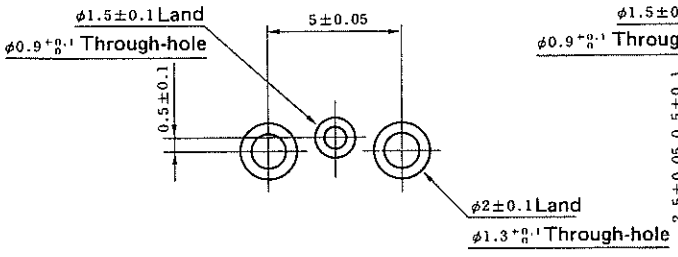

FL-R-PC-11

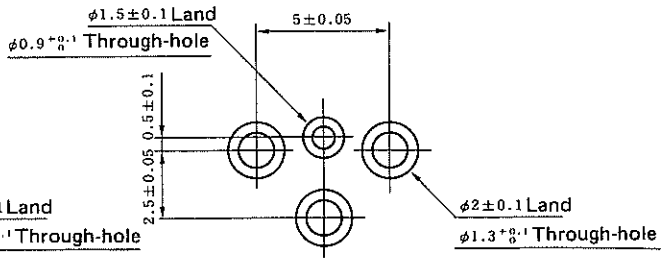

FL-R-PC-10
FL-R-PC(3)

Note: Dimensions of Lands show an example.

PANEL-MOUNTING HOLE DIAGRAM FOR FL HARNESS INSPECTION RECEPTACLES

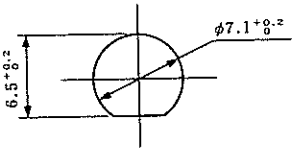

The product information in this catalog is for reference only. Please request the Engineering Drawing for the most current and accurate design information.
All non-RoHS products have been discontinued, or will be discontinued soon. Please check the products status on the Hirose website RoHS search at www.hirose-connectors.com, or contact your Hirose sales representative.

PRECAUTIONS ON USE

(1) High-frequency leakage.
The FL-LP-1.5DW connector may allow high-frequency leakage from the gap in its L-bend. This leakage may be approximately 5 dB (at 900 MHz) than our UM (SMB) connectors. Please contact the factory for high-frequency leakage test data, if necessary.

(2) Mounting the receptacles on printed circuit boards.

a. Use the FL-R-PC(3) receptacle when drawing patterns on printed-circuit-board mounting side. (This receptacle has an added insulating washer). Note that using the FL-R-PC-11or FL-R-PC-10receptacles may cause short circuiting between the central pattern and the outer conductor.

b. Each of our receptacles is designed to prevent flux from flowing into the center conductor contacts, thus permitting soldering in an automatic solder bath. The hole dimensions, however, must be exactly as specified in LAY-OUT DIAGRAMS FOR PRINTED CIRCUIT BOARDS.

Note: Excessive thru-hole diameter may cause solder to flow onto the printed-circuit-board mounting side during automatic soldering and damage the connector.

The soldering conditions:

Soldering temperature	250°C or less
Soldering time	5 sec or less

Inflow of solder may also occur due to factors other than the soldering temperature and soldering time. Contact the factory for details.

(3) Connector Insertion and Removal.

a. To connect the FL series, align the coupling axes of both connectors and then snap the connectors together. Do not insert the connector at an angle.

b. To release the connector, hook the tip of the FL-LP-N2 removal jig onto the connector lid, then pull the jig vertically along the connector coupling axis. If the removal jig is not used, hold the connector carefully by hand and pull it out along the coupling axis. Do not pull the attached cable when removing the connector. This will damage the connector.

The product information in this catalog is for reference only. Please request the Engineering Drawing for the most current and accurate design information.
All non-RoHS products have been discontinued, or will be discontinued soon. Please check the products status on the Hirose website RoHS search at www.hirose-connectors.com, or contact your Hirose sales representative.

HI-FLEX CONNECTING PRESSES AND ATTACHMENTS

Hi-Flex Connecting Press

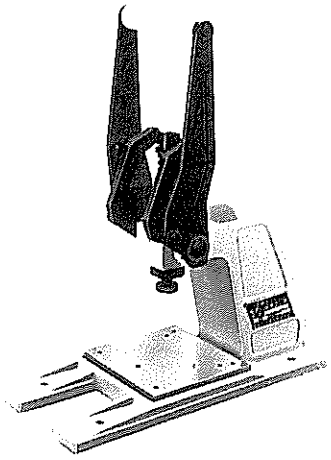

Product No.	Height	Width	Depth	Weight
Hi-Flex connecting press	440 mm	160 mm	350 mm	13 kg

Guide Plate With Block

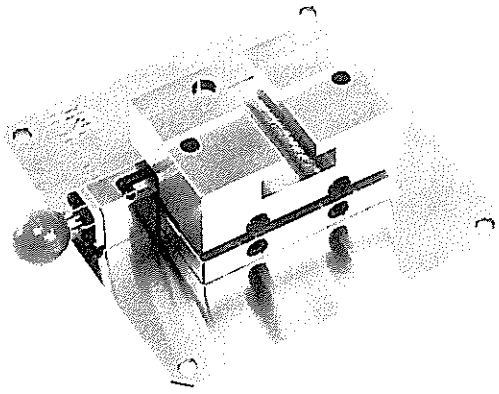

Product No.	Applicable connector
FL-LP-C (1.5D)	FL-LP-1.5DW
FL-LP-C (1.5C)	FL-LP-1.5C•QEW•CW

The product information in this catalog is for reference only. Please request the Engineering Drawing for the most current and accurate design information.
All non-RoHS products have been discontinued, or will be discontinued soon. Please check the products status on the Hirose website RoHS search at www.hirose-connectors.com, or contact your Hirose sales representative.

TERMINATION METHODS 1(FL-LP-1.5DW, FL-LP-1.5C.QEW.CW)

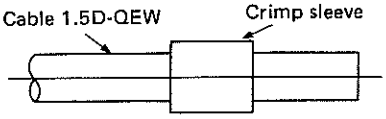

Fig. 1

1. Installing the crimp sleeve.
Mount the crimp sleeve on the cable as shown in Figure 1.

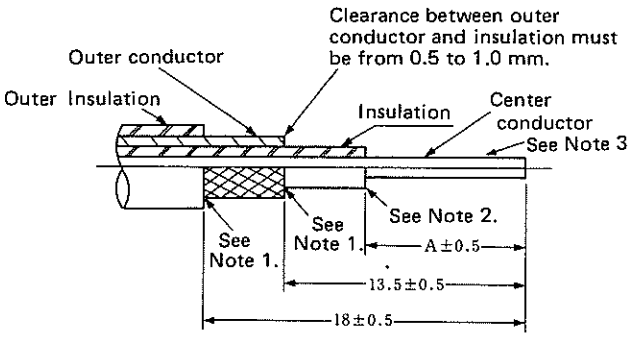

Fig. 2

2. Cable Preparation

(1) Strip the outer insulation to 18 ± 0.5 mm from the cable end shown in Figure 2. Cut the outer conductor of the cable to 13.5 ± 0.5 mm. Cut the insulation by dimension "A" specified in the table below.

(2) After preparing the cable per #1, wipe the center conductor with an alcohol-dampened cloth to remove any polythylene residue from the surface of the center conductor.

Note 1: Do not damage the outer or center conductors when cutting the insulation and outer insulation.
Note 2: Cut the insulation uniformly. Do not pull the insulation while cutting it.
Note 3: Stranded wires of center conductor should not be spread out or bent.

The specified value of dimension "A" is shown below for each connector part number.

Connector part No.	Dimension A
FL-LP-1.5DW	11 ± 0.5
FL-LP-1.5C·QEW·CW	11 ± 0.5

* Jig (FL-LP-S) for this cable end treatment is available.

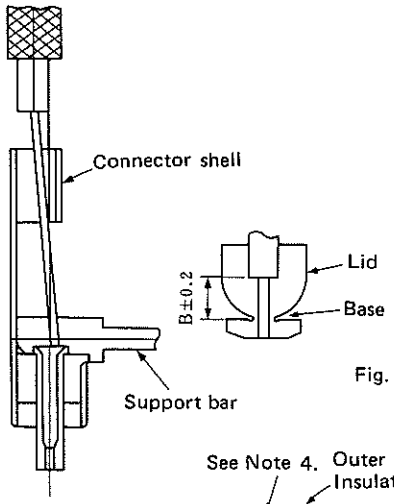

Fig. 3

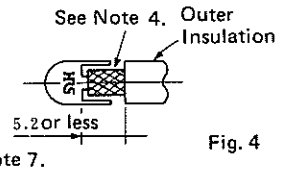

Fig. 4

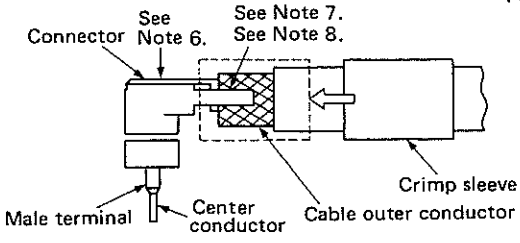

Fig. 5

3. Inserting the cable into the connector

(1) Pass the cable center conductor through the connector shell, as shown in Figure 3. Then insert the center conductor into the hole in the male terminal while making sure that the connector shell passes between the outer conductor and the cable insulation. Insertion will be completed when the cable insulation reaches the section of dimension "B" specified in the table below.
Note 4: The end of the outer conductor must be uniform with respect to the connector shell.
Note 5: After insertion, there must be a clearance of about 2 mm between the cable center conductor and the end face of the male terminal.

(2) Bend the connector lid, as shown in Figure 5.
Note 6: Directly press the lid to bend it. Do not hold the connector by the connector shell when bending the connector lid.
Note 7: Place the outer conductor in the support bar.

(3) The clearance between the outer insulation and the end face of the LP shell must be 5.2 mm or less.

(4) Slide the crimp sleeve further in up to the base of the support bar. (Fig. 5 dotted line section)
Note 8: At this time, the support bar must be inside the crimp sleeve.
The specified value of dimension "B" is shown in the table below for each connector part number.

Connector part No.	Dimension B
FL-LP-1.5DW	2
FL-LP-1.5C·QEW·CW	2

(5) Visually check the cable center conductor to ensure that its end is uniform with respect to the end of the male terminal. If the conductor does not have a uniform end, pull out hidden strands with pillars, etc.

The product information in this catalog is for reference only. Please request the Engineering Drawing for the most current and accurate design information.
All non-RoHS products have been discontinued, or will be discontinued soon. Please check the products status on the Hirose website RoHS search at www.hirose-connectors.com, or contact your Hirose sales representative.

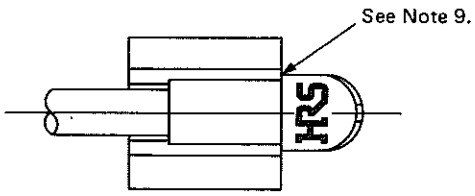

Fig. 6

4. Crimp connection of the outer conductor

(1) Insert the mating section of the connector into the hole of the crimp connection jig, as shown in Figure 6.
Note 9: After insertion, make sure that the crimp sleeve is inserted fully in the base of the support bar.

(2) Fully depress the lever of the crimp connection jig to make the connection.

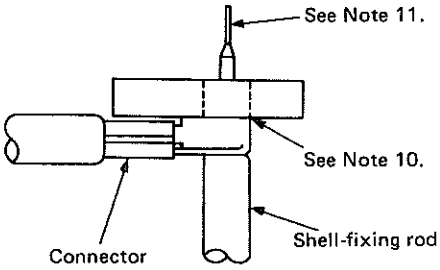

Fig. 7

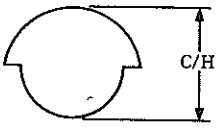

This shows one example of crimp connection.

Fig. 8

5. Crimp connection of the center conductor

(1) Insert the mating section of the connector into the hole of the crimp connection jig, as shown in Figure 7, and press the shell-fixing rod firmly against the shell.
Note 10: After insertion, make sure that the shell is inserted fully into the hole of the jig.

(2) Fully depress the lever of the crimp connecting jig to make the connection. After connection, measure dimension C/H with a micrometer and check that the measured value is within the specifications shown in the table below.

Connector part No.	C/H
FL-LP-1.5DW	0.81 ~ 0.85
FL-LP-1.5C•QEW•CW	0.87 ~ 0.92

Note 11: The section of the center conductor protruding from the end of the male terminal will have been cut off by this assembly operation. If this section still remains uncut, break and remove it by hand.

* For this crimp-connection process, the FL-LP-C (1.5D) or FL-LP-C (1.5C) jigs are available.

The product information in this catalog is for reference only. Please request the Engineering Drawing for the most current and accurate design information.
All non-RoHS products have been discontinued, or will be discontinued soon. Please check the products status on the Hirose website RoHS search at www.hirose-connectors.com, or contact your Hirose sales representative.

TERMINATION METHODS 2 (FL-P-1.5DW-1)

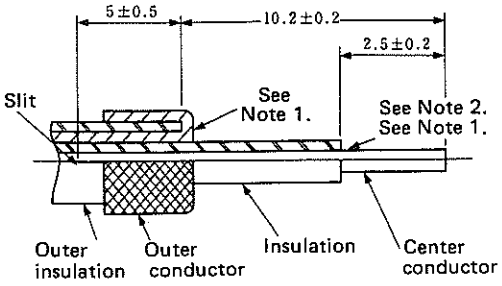

1. Cable preparation

(1) Strip the cable outer insulation by 10.2 ± 0.2 mm from the end.
(2) Make a 5 ± 0.5 mm slit in the cable insulation.
(3) Fold back the outer conductor and cut the center conductor to 2.5 ± 0.2 mm from the end.

Note 1: Do not damage the outer or center conductors when stripping the insulation and outer insulation.

Note 2: Cut the insulation uniformly, do not pull the insulation when cutting it.

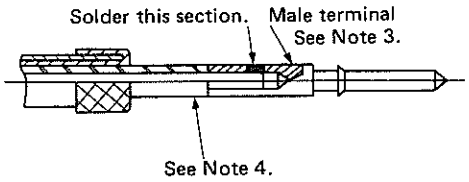

2. Soldering the center conductor

Solder the male terminal to the cable center conductor.

Note 3: Pre-solder the male terminal.

Note 4: Carry out the soldering operation to prevent melting of the end portion of the insulation due to heat.

Note 5: After soldering, remove excess solder from the soldered portion.

Note 6: Use a soldering iron with a heating capacity of 20 to 30 watts.

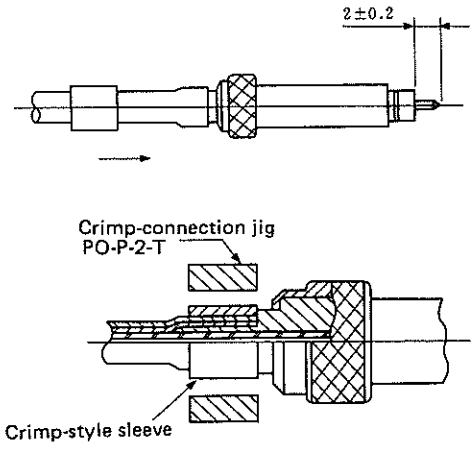

3. Inserting the cable into the connector

(1) Place the heat-shrinkable tube and the crimp sleeve onto the cable. Insert the block into the connector until the central terminal emerges 2 ± 0.2 mm cut from the shell end.
(2) Fully slide the solderless sleeve in, and then crimp it with the PO-P-2-T crimp-connection jig.

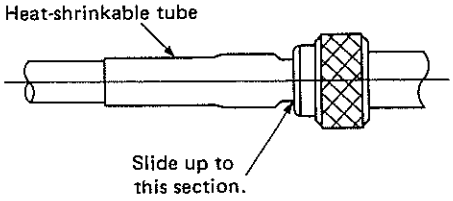

4. Mounting the heat-shrinkable tube

Slide the heat-shrinkable tube to the position shown, and then shrink it with a heat gun. Take great care during shrinking not to melt the cable outer insulation.

О компании

ООО "ТрейдЭлектроникс" - это оперативные поставки широкого спектра электронных компонентов отечественного и импортного производства напрямую от производителей и с крупнейших мировых складов. Реализуемая нашей компанией продукция насчитывает более полумиллиона наименований.

Благодаря этому наша компания предлагает к поставке практически не ограниченный ассортимент компонентов как оптовыми, мелкооптовыми партиями, так и в розницу.

Наличие собственной эффективной системы логистики обеспечивает надежную поставку продукции по конкурентным ценам в точно указанные сроки.

Срок поставки со стоков в **Европе и Америке – от 3 до 14 дней.**

Срок поставки из **Азии – от 10 дней.**

Благодаря развитой сети поставщиков, помогаем в поиске и приобретении экзотичных или снятых с производства компонентов.

Предоставляем спец цены на элементы для создания инженерных сэмплов.

Упорный труд, качественный результат дают нам право быть уверенными в себе и надежными для наших клиентов.

Наша компания это:

- Гарантия качества поставляемой продукции
- Широкий ассортимент
- Минимальные сроки поставок
- Техническая поддержка
- Подбор комплектации
- Индивидуальный подход
- Гибкое ценообразование

Наша организация особенно сильна в поставках модулей, микросхем, пассивных компонентов, ксайленсах (XC), EPF, EPM и силовой электроники.

Большой выбор предлагаемой продукции, различные виды оплаты и доставки, позволят Вам сэкономить время и получить максимум выгоды от сотрудничества с нами!

Trade Electronics.ru

гарантия бесперебойности производства и качества выпускаемой продукции

Перечень производителей, продукцию которых мы поставляем на российский рынок

AMD
ANALOG DEVICES
BOURNS
Coilcraft
élantec Semiconductor, Inc.
HARRIS
Infineon
JRC
MICREL
MOTOROLA
nichicon
PHILIPS
ROHM
SGS-THOMSON
Sipex
TAIYO YUDEN
TOKO
ZILOG
Winbond
Allegro
ATMEL
BURR - BROWN
EXAR
HITACHI
intel
Lattice
muRata
OKI
QUALCOMM
SAMSUNG
SHARP
SONY
TDK
TOSHIBA
KYOCERA
ALTERA
AVX
CITILYST
CYPRESS
FAIRCHILD SEMICONDUCTOR
HOLTEK
International IOR Rectifier
LINEAR TECHNOLOGY
MITSUBISHI
National Semiconductor
ON Semiconductor
REALTEK
SANYO
SHINDENGEN
SGS
TECCOR
TUNDRA
XILINX
Amphenol
Bay Linear
CIRRUS LOGIC
DALLAS
FUJITSU
IDT
intersil
MAXIM
molex
NEC
Panasonic
RENESAS
SII
SIEMENS
ST
Texas Instruments
VISHAY
ZETEX SEMICONDUCTORS

Trade Electronics.ru

гарантия бесперебойности производства и качества выпускаемой продукции

С удовольствием будем прорабатывать для Вас поставки всех необходимых компонентов по текущим запросам для скорейшего выявления групп элементов, по которым сотрудничество именно с нашей компанией будет для Вас максимально выгодным!

С уважением,

Менеджер отдела продаж ООО

«Трейд Электроникс»

Шишлаков Евгений

8 (495)668-30-28 доб 169

manager28@tradeelectronics.ru

http://www.tradeelectronics.ru/