74HC4051; 74HCT4051

8-channel analog multiplexer/demultiplexer

Rev. 6 — 13 December 2011 Product data sheet

1. General description

The 74HC4051; 74HCT4051 is a high-speed Si-gate CMOS device and is pin compatible with Low-power Schottky TTL (LSTTL). The device is specified in compliance with JEDEC standard no. 7A.

The 74HC4051; 74HCT4051 is an 8-channel analog multiplexer/demultiplexer with three digital select inputs (S0 to S2), an active-LOW enable input ($\overline{E}$), eight independent inputs/outputs (Y0 to Y7) and a common input/output (Z). With $\overline{E}$ LOW, one of the eight switches is selected (low impedance ON-state) by S0 to S2. With $\overline{E}$ HIGH, all switches are in the high-impedance OFF-state, independent of S0 to S2.

V_{CC} and GND are the supply voltage pins for the digital control inputs (S0 to S2, and $\overline{E}$). The V_{CC} to GND ranges are 2.0 V to 10.0 V for 74HC4051 and 4.5 V to 5.5 V for 74HCT4051. The analog inputs/outputs (Y0 to Y7, and Z) can swing between V_{CC} as a positive limit and V_{EE} as a negative limit. $V_{CC} - V_{EE}$ may not exceed 10.0 V.

For operation as a digital multiplexer/demultiplexer, V_{EE} is connected to GND (typically ground).

2. Features and benefits

- Wide analog input voltage range from –5 V to +5 V
- Low ON resistance:
  - 80 Ω (typical) at $V_{CC} - V_{EE}$ = 4.5 V
  - 70 Ω (typical) at $V_{CC} - V_{EE}$ = 6.0 V
  - 60 Ω (typical) at $V_{CC} - V_{EE}$ = 9.0 V
- Logic level translation: to enable 5 V logic to communicate with ±5 V analog signals
- Typical ‘break before make’ built-in
- ESD protection:
  - HBM JESD22-A114F exceeds 2000 V
  - MM JESD22-A115-A exceeds 200 V
- Multiple package options
- Specified from –40 °C to +85 °C and –40 °C to +125 °C

3. Applications

- Analog multiplexing and demultiplexing
- Digital multiplexing and demultiplexing
- Signal gating

4. Ordering information

Table 1. Ordering information

Type number	Package			
	Temperature range	Name	Description	Version
74HC4051N	–40 °C to +125 °C	DIP16	plastic dual in-line package; 16 leads (300 mil)	SOT38-4
74HCT4051N				
74HC4051D	–40 °C to +125 °C	SO16	plastic small outline package; 16 leads; body width 3.9 mm	SOT109-1
74HCT4051D				
74HC4051DB	–40 °C to +125 °C	SSOP16	plastic shrink small outline package; 16 leads; body width 5.3 mm	SOT338-1
74HCT4051DB				
74HC4051PW	–40 °C to +125 °C	TSSOP16	plastic thin shrink small outline package; 16 leads; body width 4.4 mm	SOT403-1
74HCT4051PW				
74HC4051BQ	–40 °C to +125 °C	DHVQFN16	plastic dual in-line compatible thermal enhanced very thin quad flat package; no leads; 16 terminals; body 2.5 × 3.5 × 0.85 mm	SOT763-1
74HCT4051BQ				

5. Functional diagram

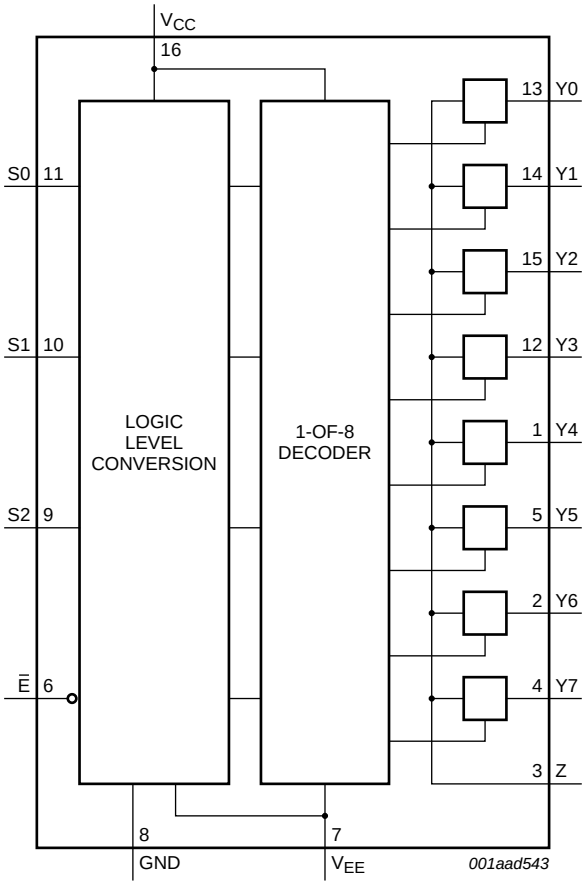

Fig 1. Functional diagram

All information provided in this document is subject to legal disclaimers.

© NXP B.V. 2011. All rights reserved.

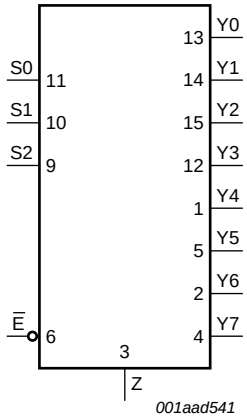

Fig 2. Logic symbol

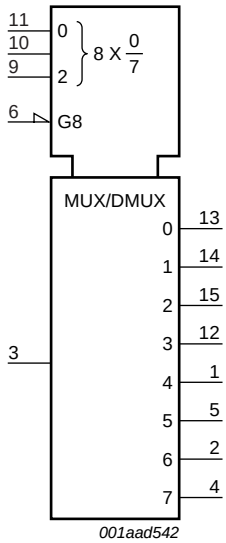

Fig 3. IEC logic symbol

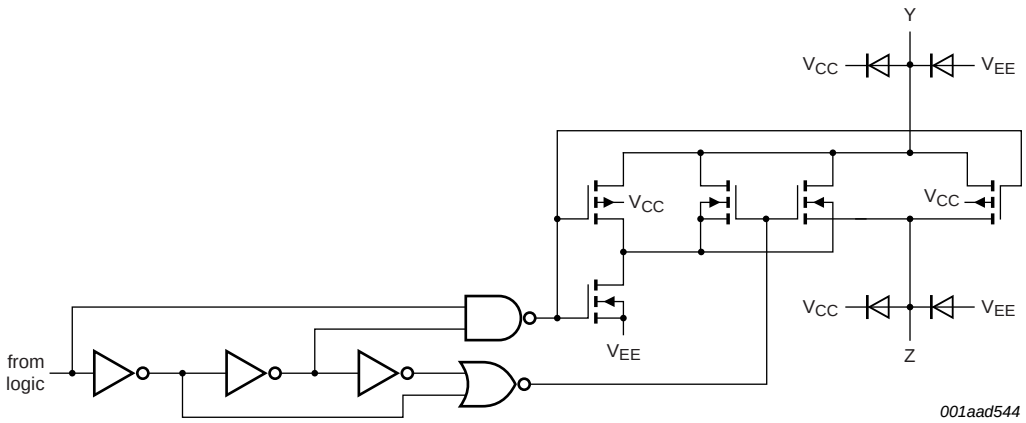

Fig 4. Schematic diagram (one switch)

All information provided in this document is subject to legal disclaimers.

© NXP B.V. 2011. All rights reserved.

6. Pinning information

6.1 Pinning

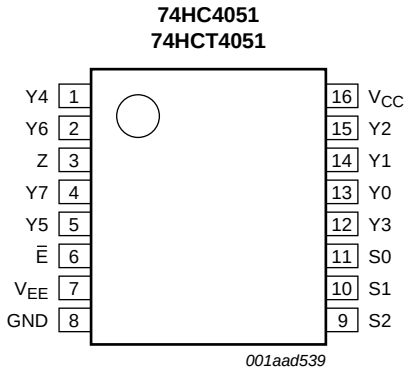

Fig 5. Pin configuration DIP16, SO16, and (T)SSOP16

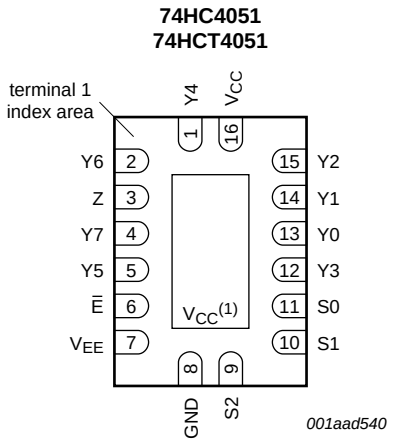

(1) This is not a supply pin. The substrate is attached to this pad using conductive die attach material. There is no electrical or mechanical requirement to solder this pad. However, if it is soldered, the solder land should remain floating or be connected to V_{CC}.

Fig 6. Pin configuration DHVQFN16

6.2 Pin description

Table 2. Pin description

Symbol	Pin	Description
$\overline{E}$	6	enable input (active LOW)
V_{EE}	7	supply voltage
GND	8	ground supply voltage
S0, S1, S2	11, 10, 9	select input
Y0, Y1, Y2, Y3, Y4, Y5, Y6, Y7	13, 14, 15, 12, 1, 5, 2, 4	independent input or output
Z	3	common output or input
V_{CC}	16	supply voltage

All information provided in this document is subject to legal disclaimers.

© NXP B.V. 2011. All rights reserved.

7. Functional description

7.1 Function table

Table 3. Function table[1]

Input				Channel ON
$\overline{E}$	S2	S1	S0	
L	L	L	L	Y0 to Z
L	L	L	H	Y1 to Z
L	L	H	L	Y2 to Z
L	L	H	H	Y3 to Z
L	H	L	L	Y4 to Z
L	H	L	H	Y5 to Z
L	H	H	L	Y6 to Z
L	H	H	H	Y7 to Z
H	X	X	X	switches off

[1] H = HIGH voltage level;
L = LOW voltage level;
X = don't care.

8. Limiting values

Table 4. Limiting values

In accordance with the Absolute Maximum Rating System (IEC 60134). Voltages are referenced to V_{SS} = 0 V (ground).

Symbol	Parameter	Conditions		Min	Max	Unit
V_{CC}	supply voltage		[1]	−0.5	+11.0	V
I_{IK}	input clamping current	$V_I < -0.5$ V or $V_I > V_{CC} + 0.5$ V		-	±20	mA
I_{SK}	switch clamping current	$V_{SW} < -0.5$ V or $V_{SW} > V_{CC} + 0.5$ V		-	±20	mA
I_{SW}	switch current	-0.5 V $< V_{SW} < V_{CC} + 0.5$ V		-	±25	mA
I_{EE}	supply current			-	±20	mA
I_{CC}	supply current			-	50	mA
I_{GND}	ground current			-	−50	mA
T_{stg}	storage temperature			−65	+150	°C
P_{tot}	total power dissipation	DIP16 package	[2]	-	750	mW
		SO16, (T)SSOP16, and DHVQFN16 package	[3]	-	500	mW
P	power dissipation	per switch		-	100	mW

[1] To avoid drawing V_{CC} current out of terminal Z, when switch current flows into terminals Yn, the voltage drop across the bidirectional switch must not exceed 0.4 V. If the switch current flows into terminal Z, no V_{CC} current will flow out of terminals Yn, and in this case there is no limit for the voltage drop across the switch, but the voltages at Yn and Z may not exceed V_{CC} or V_{EE}.

[2] For DIP16 packages: above 70 °C the value of P_{tot} derates linearly with 12 mW/K.

[3] For SO16 packages: above 70 °C the value of P_{tot} derates linearly with 8 mW/K.
For SSOP16 and TSSOP16 packages: above 60 °C the value of P_{tot} derates linearly with 5.5 mW/K.
For DHVQFN16 packages: above 60 °C the value of P_{tot} derates linearly with 4.5 mW/K.

All information provided in this document is subject to legal disclaimers.

© NXP B.V. 2011. All rights reserved.

9. Recommended operating conditions

Table 5. Recommended operating conditions

Symbol	Parameter	Conditions	74HC4051			74HCT4051			Unit
			Min	Typ	Max	Min	Typ	Max	
V_{CC}	supply voltage	see Figure 7 and Figure 8							
		V_{CC} – GND	2.0	5.0	10.0	4.5	5.0	5.5	V
		V_{CC} – V_{EE}	2.0	5.0	10.0	2.0	5.0	10.0	V
V_I	input voltage		GND	-	V_{CC}	GND	-	V_{CC}	V
V_{SW}	switch voltage		V_{EE}	-	V_{CC}	V_{EE}	-	V_{CC}	V
T_{amb}	ambient temperature		–40	+25	+125	–40	+25	+125	°C
$\Delta t/\Delta V$	input transition rise and fall rate	V_{CC} = 2.0 V	-	-	625	-	-	-	ns/V
		V_{CC} = 4.5 V	-	1.67	139	-	1.67	139	ns/V
		V_{CC} = 6.0 V	-	-	83	-	-	-	ns/V
		V_{CC} = 10.0 V	-	-	31	-	-	-	ns/V

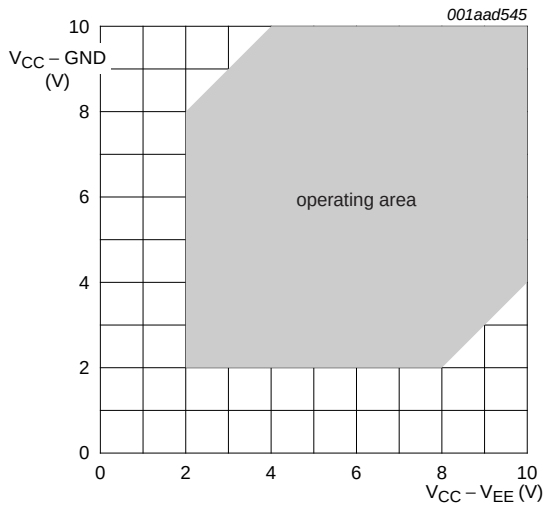

Fig 7. Guaranteed operating area as a function of the supply voltages for 74HC4051

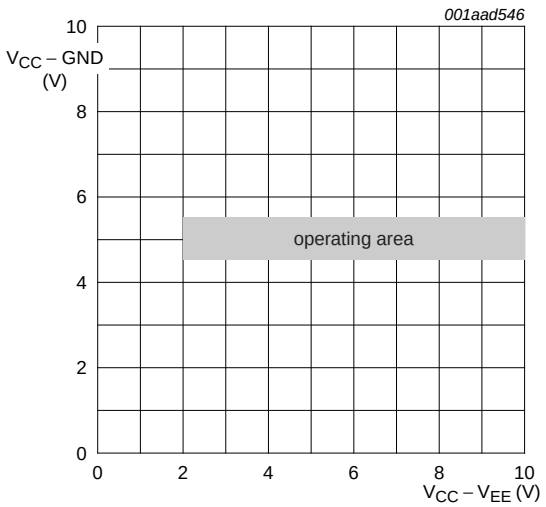

Fig 8. Guaranteed operating area as a function of the supply voltages for 74HCT4051

All information provided in this document is subject to legal disclaimers.

© NXP B.V. 2011. All rights reserved.

10. Static characteristics

Table 6. R_{ON} resistance per switch for 74HC4051 and 74HCT4051

$V_I = V_{IH}$ or V_{IL}; for test circuit see Figure 9.
V_{is} is the input voltage at a Yn or Z terminal, whichever is assigned as an input.
V_{os} is the output voltage at a Yn or Z terminal, whichever is assigned as an output.
For 74HC4051: $V_{CC} - GND$ or $V_{CC} - V_{EE}$ = 2.0 V, 4.5 V, 6.0 V and 9.0 V.
For 74HCT4051: $V_{CC} - GND$ = 4.5 V and 5.5 V, $V_{CC} - V_{EE}$ = 2.0 V, 4.5 V, 6.0 V and 9.0 V.

Symbol	Parameter	Conditions		Min	Typ	Max	Unit
T_{amb} = 25 °C							
$R_{ON(peak)}$	ON resistance (peak)	$V_{is} = V_{CC}$ to V_{EE}					
		V_{CC} = 2.0 V; V_{EE} = 0 V; I_{SW} = 100 μA	[1]	-	-	-	Ω
		V_{CC} = 4.5 V; V_{EE} = 0 V; I_{SW} = 1000 μA		-	100	180	Ω
		V_{CC} = 6.0 V; V_{EE} = 0 V; I_{SW} = 1000 μA		-	90	160	Ω
		V_{CC} = 4.5 V; V_{EE} = –4.5 V; I_{SW} = 1000 μA		-	70	130	Ω
$R_{ON(rail)}$	ON resistance (rail)	$V_{is} = V_{EE}$					
		V_{CC} = 2.0 V; V_{EE} = 0 V; I_{SW} = 100 μA	[1]	-	150	-	Ω
		V_{CC} = 4.5 V; V_{EE} = 0 V; I_{SW} = 1000 μA		-	80	140	Ω
		V_{CC} = 6.0 V; V_{EE} = 0 V; I_{SW} = 1000 μA		-	70	120	Ω
		V_{CC} = 4.5 V; V_{EE} = –4.5 V; I_{SW} = 1000 μA		-	60	105	Ω
		$V_{is} = V_{CC}$					
		V_{CC} = 2.0 V; V_{EE} = 0 V; I_{SW} = 100 μA	[1]	-	150	-	Ω
		V_{CC} = 4.5 V; V_{EE} = 0 V; I_{SW} = 1000 μA		-	90	160	Ω
		V_{CC} = 6.0 V; V_{EE} = 0 V; I_{SW} = 1000 μA		-	80	140	Ω
		V_{CC} = 4.5 V; V_{EE} = –4.5 V; I_{SW} = 1000 μA		-	65	120	Ω
ΔR_{ON}	ON resistance mismatch between channels	$V_{is} = V_{CC}$ to V_{EE}					
		V_{CC} = 2.0 V; V_{EE} = 0 V	[1]	-	-	-	Ω
		V_{CC} = 4.5 V; V_{EE} = 0 V		-	9	-	Ω
		V_{CC} = 6.0 V; V_{EE} = 0 V		-	8	-	Ω
		V_{CC} = 4.5 V; V_{EE} = –4.5 V		-	6	-	Ω
T_{amb} = –40 °C to +85 °C							
$R_{ON(peak)}$	ON resistance (peak)	$V_{is} = V_{CC}$ to V_{EE}					
		V_{CC} = 2.0 V; V_{EE} = 0 V; I_{SW} = 100 μA	[1]	-	-	-	Ω
		V_{CC} = 4.5 V; V_{EE} = 0 V; I_{SW} = 1000 μA		-	-	225	Ω
		V_{CC} = 6.0 V; V_{EE} = 0 V; I_{SW} = 1000 μA		-	-	200	Ω
		V_{CC} = 4.5 V; V_{EE} = –4.5 V; I_{SW} = 1000 μA		-	-	165	Ω

All information provided in this document is subject to legal disclaimers.

© NXP B.V. 2011. All rights reserved.

Table 6. R_{ON} resistance per switch for 74HC4051 and 74HCT4051 *...continued*

$V_I = V_{IH}$ or V_{IL}; for test circuit see Figure 9.
V_{is} is the input voltage at a Yn or Z terminal, whichever is assigned as an input.
V_{os} is the output voltage at a Yn or Z terminal, whichever is assigned as an output.
For 74HC4051: $V_{CC} - GND$ or $V_{CC} - V_{EE}$ = 2.0 V, 4.5 V, 6.0 V and 9.0 V.
For 74HCT4051: $V_{CC} - GND$ = 4.5 V and 5.5 V, $V_{CC} - V_{EE}$ = 2.0 V, 4.5 V, 6.0 V and 9.0 V.

Symbol	Parameter	Conditions		Min	Typ	Max	Unit
$R_{ON(rail)}$	ON resistance (rail)	$V_{is} = V_{EE}$					
		V_{CC} = 2.0 V; V_{EE} = 0 V; I_{SW} = 100 μA	[1]	-	-	-	Ω
		V_{CC} = 4.5 V; V_{EE} = 0 V; I_{SW} = 1000 μA		-	-	175	Ω
		V_{CC} = 6.0 V; V_{EE} = 0 V; I_{SW} = 1000 μA		-	-	150	Ω
		V_{CC} = 4.5 V; V_{EE} = –4.5 V; I_{SW} = 1000 μA		-	-	130	Ω
		$V_{is} = V_{CC}$					
		V_{CC} = 2.0 V; V_{EE} = 0 V; I_{SW} = 100 μA	[1]	-	-	-	Ω
		V_{CC} = 4.5 V; V_{EE} = 0 V; I_{SW} = 1000 μA		-	-	200	Ω
		V_{CC} = 6.0 V; V_{EE} = 0 V; I_{SW} = 1000 μA		-	-	175	Ω
		V_{CC} = 4.5 V; V_{EE} = –4.5 V; I_{SW} = 1000 μA		-	-	150	Ω
T_{amb} = –40 °C to +125 °C							
$R_{ON(peak)}$	ON resistance (peak)	$V_{is} = V_{CC}$ to V_{EE}					
		V_{CC} = 2.0 V; V_{EE} = 0 V; I_{SW} = 100 μA	[1]	-	-	-	Ω
		V_{CC} = 4.5 V; V_{EE} = 0 V; I_{SW} = 1000 μA		-	-	270	Ω
		V_{CC} = 6.0 V; V_{EE} = 0 V; I_{SW} = 1000 μA		-	-	240	Ω
		V_{CC} = 4.5 V; V_{EE} = –4.5 V; I_{SW} = 1000 μA		-	-	195	Ω
$R_{ON(rail)}$	ON resistance (rail)	$V_{is} = V_{EE}$					
		V_{CC} = 2.0 V; V_{EE} = 0 V; I_{SW} = 100 μA	[1]	-	-	-	Ω
		V_{CC} = 4.5 V; V_{EE} = 0 V; I_{SW} = 1000 μA		-	-	210	Ω
		V_{CC} = 6.0 V; V_{EE} = 0 V; I_{SW} = 1000 μA		-	-	180	Ω
		V_{CC} = 4.5 V; V_{EE} = –4.5 V; I_{SW} = 1000 μA		-	-	160	Ω
		$V_{is} = V_{CC}$					
		V_{CC} = 2.0 V; V_{EE} = 0 V; I_{SW} = 100 μA	[1]	-	-	-	Ω
		V_{CC} = 4.5 V; V_{EE} = 0 V; I_{SW} = 1000 μA		-	-	240	Ω
		V_{CC} = 6.0 V; V_{EE} = 0 V; I_{SW} = 1000 μA		-	-	210	Ω
		V_{CC} = 4.5 V; V_{EE} = –4.5 V; I_{SW} = 1000 μA		-	-	180	Ω

[1] When supply voltages ($V_{CC} - V_{EE}$) near 2.0 V the analog switch ON resistance becomes extremely non-linear. When using a supply of 2 V, it is recommended to use these devices only for transmitting digital signals.

All information provided in this document is subject to legal disclaimers.

© NXP B.V. 2011. All rights reserved.

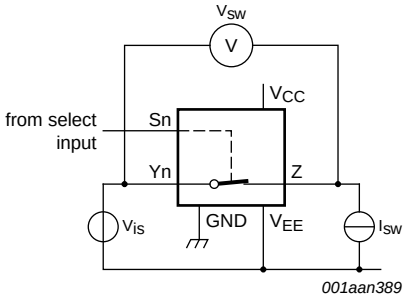

V_{is} = 0 V to (V_{CC} – V_{EE}).

$$R_{ON} = \frac{V_{sw}}{I_{sw}}$$

Fig 9. Test circuit for measuring R_{ON}

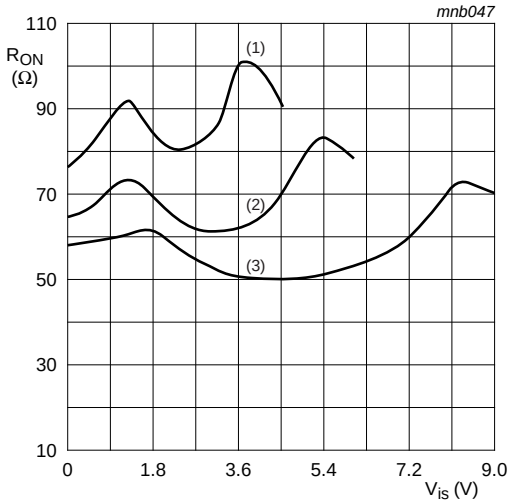

V_{is} = 0 V to (V_{CC} – V_{EE}).

(1) V_{CC} = 4.5 V

(2) V_{CC} = 6 V

(3) V_{CC} = 9 V

Fig 10. Typical R_{ON} as a function of input voltage V_{is}

Table 7. Static characteristics for 74HC4051

Voltages are referenced to GND (ground = 0 V).

V_{is} is the input voltage at pins Yn or Z, whichever is assigned as an input.

V_{os} is the output voltage at pins Z or Yn, whichever is assigned as an output.

Symbol	Parameter	Conditions	Min	Typ	Max	Unit
T_{amb} = 25 °C						
V_{IH}	HIGH-level input voltage	V_{CC} = 2.0 V	1.5	1.2	-	V
		V_{CC} = 4.5 V	3.15	2.4	-	V
		V_{CC} = 6.0 V	4.2	3.2	-	V
		V_{CC} = 9.0 V	6.3	4.7	-	V
V_{IL}	LOW-level input voltage	V_{CC} = 2.0 V	-	0.8	0.5	V
		V_{CC} = 4.5 V	-	2.1	1.35	V
		V_{CC} = 6.0 V	-	2.8	1.8	V
		V_{CC} = 9.0 V	-	4.3	2.7	V
I_I	input leakage current	V_{EE} = 0 V; V_I = V_{CC} or GND				
		V_{CC} = 6.0 V	-	-	±0.1	μA
		V_{CC} = 10.0 V	-	-	±0.2	μA
$I_{S(OFF)}$	OFF-state leakage current	V_{CC} = 10.0 V; V_{EE} = 0 V; V_I = V_{IH} or V_{IL}; $\|V_{SW}\|$ = V_{CC} – V_{EE}; see Figure 11				
		per channel	-	-	±0.1	μA
		all channels	-	-	±0.4	μA
$I_{S(ON)}$	ON-state leakage current	V_I = V_{IH} or V_{IL}; $\|V_{SW}\|$ = V_{CC} – V_{EE}; V_{CC} = 10.0 V; V_{EE} = 0 V; see Figure 12	-	-	±0.4	μA

All information provided in this document is subject to legal disclaimers.

© NXP B.V. 2011. All rights reserved.

Table 7. Static characteristics for 74HC4051 *...continued*

Voltages are referenced to GND (ground = 0 V).
V_{is} is the input voltage at pins Yn or Z, whichever is assigned as an input.
V_{os} is the output voltage at pins Z or Yn, whichever is assigned as an output.

Symbol	Parameter	Conditions	Min	Typ	Max	Unit
I_{CC}	supply current	V_{EE} = 0 V; V_I = V_{CC} or GND; V_{is} = V_{EE} or V_{CC}; V_{os} = V_{CC} or V_{EE}				
		V_{CC} = 6.0 V	-	-	8.0	μA
		V_{CC} = 10.0 V	-	-	16.0	μA
C_I	input capacitance		-	3.5	-	pF
C_{sw}	switch capacitance	independent pins Yn	-	5	-	pF
		common pins Z	-	25	-	pF
T_{amb} = –40 °C to +85 °C						
V_{IH}	HIGH-level input voltage	V_{CC} = 2.0 V	1.5	-	-	V
		V_{CC} = 4.5 V	3.15	-	-	V
		V_{CC} = 6.0 V	4.2	-	-	V
		V_{CC} = 9.0 V	6.3	-	-	V
V_{IL}	LOW-level input voltage	V_{CC} = 2.0 V	-	-	0.5	V
		V_{CC} = 4.5 V	-	-	1.35	V
		V_{CC} = 6.0 V	-	-	1.8	V
		V_{CC} = 9.0 V	-	-	2.7	V
I_I	input leakage current	V_{EE} = 0 V; V_I = V_{CC} or GND				
		V_{CC} = 6.0 V	-	-	±1.0	μA
		V_{CC} = 10.0 V	-	-	±2.0	μA
$I_{S(OFF)}$	OFF-state leakage current	V_{CC} = 10.0 V; V_{EE} = 0 V; V_I = V_{IH} or V_{IL}; $\|V_{SW}\|$ = V_{CC} – V_{EE}; see Figure 11				
		per channel	-	-	±1.0	μA
		all channels	-	-	±4.0	μA
$I_{S(ON)}$	ON-state leakage current	V_I = V_{IH} or V_{IL}; $\|V_{SW}\|$ = V_{CC} – V_{EE}; V_{CC} = 10.0 V; V_{EE} = 0 V; see Figure 12	-	-	±4.0	μA
I_{CC}	supply current	V_{EE} = 0 V; V_I = V_{CC} or GND; V_{is} = V_{EE} or V_{CC}; V_{os} = V_{CC} or V_{EE}				
		V_{CC} = 6.0 V	-	-	80.0	μA
		V_{CC} = 10.0 V	-	-	160.0	μA
T_{amb} = –40 °C to +125 °C						
V_{IH}	HIGH-level input voltage	V_{CC} = 2.0 V	1.5	-	-	V
		V_{CC} = 4.5 V	3.15	-	-	V
		V_{CC} = 6.0 V	4.2	-	-	V
		V_{CC} = 9.0 V	6.3	-	-	V
V_{IL}	LOW-level input voltage	V_{CC} = 2.0 V	-	-	0.5	V
		V_{CC} = 4.5 V	-	-	1.35	V
		V_{CC} = 6.0 V	-	-	1.8	V
		V_{CC} = 9.0 V	-	-	2.7	V

All information provided in this document is subject to legal disclaimers.

© NXP B.V. 2011. All rights reserved.

Table 7. Static characteristics for 74HC4051 *...continued*

Voltages are referenced to GND (ground = 0 V).
V_{is} is the input voltage at pins Yn or Z, whichever is assigned as an input.
V_{os} is the output voltage at pins Z or Yn, whichever is assigned as an output.

Symbol	Parameter	Conditions	Min	Typ	Max	Unit
I_I	input leakage current	V_{EE} = 0 V; V_I = V_{CC} or GND				
		V_{CC} = 6.0 V	-	-	±1.0	μA
		V_{CC} = 10.0 V	-	-	±2.0	μA
$I_{S(OFF)}$	OFF-state leakage current	V_{CC} = 10.0 V; V_{EE} = 0 V; V_I = V_{IH} or V_{IL}; $\|V_{SW}\|$ = V_{CC} − V_{EE}; see Figure 11				
		per channel	-	-	±1.0	μA
		all channels	-	-	±4.0	μA
$I_{S(ON)}$	ON-state leakage current	V_I = V_{IH} or V_{IL}; $\|V_{SW}\|$ = V_{CC} − V_{EE}; V_{CC} = 10.0 V; V_{EE} = 0 V; see Figure 12	-	-	±4.0	μA
I_{CC}	supply current	V_{EE} = 0 V; V_I = V_{CC} or GND; V_{is} = V_{EE} or V_{CC}; V_{os} = V_{CC} or V_{EE}				
		V_{CC} = 6.0 V	-	-	160.0	μA
		V_{CC} = 10.0 V	-	-	320.0	μA

Table 8. Static characteristics for 74HCT4051

Voltages are referenced to GND (ground = 0 V).
V_{is} is the input voltage at pins Yn or Z, whichever is assigned as an input.
V_{os} is the output voltage at pins Z or Yn, whichever is assigned as an output.

Symbol	Parameter	Conditions	Min	Typ	Max	Unit
T_{amb} = 25 °C						
V_{IH}	HIGH-level input voltage	V_{CC} = 4.5 V to 5.5 V	2.0	1.6	-	V
V_{IL}	LOW-level input voltage	V_{CC} = 4.5 V to 5.5 V	-	1.2	0.8	V
I_I	input leakage current	V_I = V_{CC} or GND; V_{CC} = 5.5 V; V_{EE} = 0 V	-	-	±0.1	μA
$I_{S(OFF)}$	OFF-state leakage current	V_{CC} = 10.0 V; V_{EE} = 0 V; V_I = V_{IH} or V_{IL}; $\|V_{SW}\|$ = V_{CC} − V_{EE}; see Figure 11				
		per channel	-	-	±0.1	μA
		all channels	-	-	±0.4	μA
$I_{S(ON)}$	ON-state leakage current	V_{CC} = 10.0 V; V_{EE} = 0 V; V_I = V_{IH} or V_{IL}; $\|V_{SW}\|$ = V_{CC} − V_{EE}; see Figure 12	-	-	±0.4	μA
I_{CC}	supply current	V_I = V_{CC} or GND; V_{is} = V_{EE} or V_{CC}; V_{os} = V_{CC} or V_{EE}				
		V_{CC} = 5.5 V; V_{EE} = 0 V	-	-	8.0	μA
		V_{CC} = 5.0 V; V_{EE} = −5.0 V	-	-	16.0	μA
ΔI_{CC}	additional supply current	per input; V_I = V_{CC} − 2.1 V; other inputs at V_{CC} or GND; V_{CC} = 4.5 V to 5.5 V; V_{EE} = 0 V	-	50	180	μA
C_I	input capacitance		-	3.5	-	pF
C_{sw}	switch capacitance	independent pins Yn	-	5	-	pF
		common pins Z	-	25	-	pF

All information provided in this document is subject to legal disclaimers.

© NXP B.V. 2011. All rights reserved.

Table 8. Static characteristics for 74HCT4051 *...continued*

Voltages are referenced to GND (ground = 0 V).
V_{is} is the input voltage at pins Yn or Z, whichever is assigned as an input.
V_{os} is the output voltage at pins Z or Yn, whichever is assigned as an output.

Symbol	Parameter	Conditions	Min	Typ	Max	Unit
T_{amb} = –40 °C to +85 °C						
V_{IH}	HIGH-level input voltage	V_{CC} = 4.5 V to 5.5 V	2.0	-	-	V
V_{IL}	LOW-level input voltage	V_{CC} = 4.5 V to 5.5 V	-	-	0.8	V
I_I	input leakage current	$V_I = V_{CC}$ or GND; V_{CC} = 5.5 V; V_{EE} = 0 V	-	-	±1.0	μA
$I_{S(OFF)}$	OFF-state leakage current	V_{CC} = 10.0 V; V_{EE} = 0 V; $V_I = V_{IH}$ or V_{IL}; $\|V_{SW}\| = V_{CC} - V_{EE}$; see Figure 11				
		per channel	-	-	±1.0	μA
		all channels	-	-	±4.0	μA
$I_{S(ON)}$	ON-state leakage current	V_{CC} = 10.0 V; V_{EE} = 0 V; $V_I = V_{IH}$ or V_{IL}; $\|V_{SW}\| = V_{CC} - V_{EE}$; see Figure 12	-	-	±4.0	μA
I_{CC}	supply current	$V_I = V_{CC}$ or GND; $V_{is} = V_{EE}$ or V_{CC}; $V_{os} = V_{CC}$ or V_{EE}				
		V_{CC} = 5.5 V; V_{EE} = 0 V	-	-	80.0	μA
		V_{CC} = 5.0 V; V_{EE} = –5.0 V	-	-	160.0	μA
ΔI_{CC}	additional supply current	per input; $V_I = V_{CC}$ – 2.1 V; other inputs at V_{CC} or GND; V_{CC} = 4.5 V to 5.5 V; V_{EE} = 0 V	-	-	225	μA
T_{amb} = –40 °C to +125 °C						
V_{IH}	HIGH-level input voltage	V_{CC} = 4.5 V to 5.5 V	2.0	-	-	V
V_{IL}	LOW-level input voltage	V_{CC} = 4.5 V to 5.5 V	-	-	0.8	V
I_I	input leakage current	$V_I = V_{CC}$ or GND; V_{CC} = 5.5 V; V_{EE} = 0 V	-	-	±1.0	μA
$I_{S(OFF)}$	OFF-state leakage current	V_{CC} = 10.0 V; V_{EE} = 0 V; $V_I = V_{IH}$ or V_{IL}; $\|V_{SW}\| = V_{CC} - V_{EE}$; see Figure 11				
		per channel	-	-	±1.0	μA
		all channels	-	-	±4.0	μA
$I_{S(ON)}$	ON-state leakage current	V_{CC} = 10.0 V; V_{EE} = 0 V; $V_I = V_{IH}$ or V_{IL}; $\|V_{SW}\| = V_{CC} - V_{EE}$; see Figure 12	-	-	±4.0	μA
I_{CC}	supply current	$V_I = V_{CC}$ or GND; $V_{is} = V_{EE}$ or V_{CC}; $V_{os} = V_{CC}$ or V_{EE}				
		V_{CC} = 5.5 V; V_{EE} = 0 V	-	-	160.0	μA
		V_{CC} = 5.0 V; V_{EE} = –5.0 V	-	-	320.0	μA
ΔI_{CC}	additional supply current	per input; $V_I = V_{CC}$ – 2.1 V; other inputs at V_{CC} or GND; V_{CC} = 4.5 V to 5.5 V; V_{EE} = 0 V	-	-	245	μA

All information provided in this document is subject to legal disclaimers.

© NXP B.V. 2011. All rights reserved.

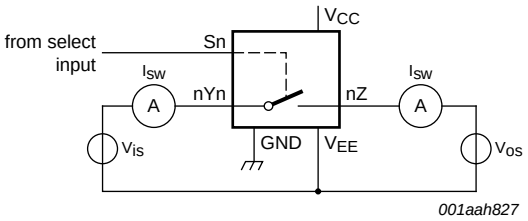

$V_{is} = V_{CC}$ and $V_{os} = V_{EE}$.

$V_{is} = V_{EE}$ and $V_{os} = V_{CC}$.

Fig 11. Test circuit for measuring OFF-state current

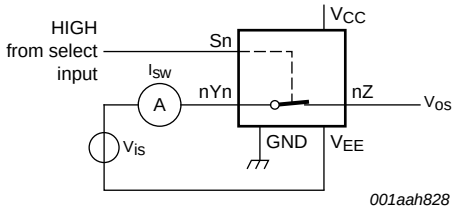

$V_{is} = V_{CC}$ and V_{os} = open-circuit.

$V_{is} = V_{EE}$ and V_{os} = open-circuit.

Fig 12. Test circuit for measuring ON-state current

11. Dynamic characteristics

Table 9. Dynamic characteristics for 74HC4051

GND = 0 V; $t_r = t_f$ = 6 ns; C_L = 50 pF; for test circuit see Figure 15.
V_{is} is the input voltage at a Yn or Z terminal, whichever is assigned as an input.
V_{os} is the output voltage at a Yn or Z terminal, whichever is assigned as an output.

Symbol	Parameter	Conditions		Min	Typ	Max	Unit
T_{amb} = 25 °C							
t_{pd}	propagation delay	V_{is} to V_{os}; $R_L = \infty\ \Omega$; see Figure 13	[1]				
		V_{CC} = 2.0 V; V_{EE} = 0 V		-	14	60	ns
		V_{CC} = 4.5 V; V_{EE} = 0 V		-	5	12	ns
		V_{CC} = 6.0 V; V_{EE} = 0 V		-	4	10	ns
		V_{CC} = 4.5 V; V_{EE} = −4.5 V		-	4	8	ns

All information provided in this document is subject to legal disclaimers.

© NXP B.V. 2011. All rights reserved.

Table 9. Dynamic characteristics for 74HC4051 *...continued*

GND = 0 V; $t_r = t_f = 6$ ns; $C_L = 50$ pF; for test circuit see Figure 15.
V_{is} is the input voltage at a Yn or Z terminal, whichever is assigned as an input.
V_{os} is the output voltage at a Yn or Z terminal, whichever is assigned as an output.

Symbol	Parameter	Conditions		Min	Typ	Max	Unit
t_{on}	turn-on time	$\overline{E}$ to V_{os}; $R_L = \infty\ \Omega$; see Figure 14	[2]				
		V_{CC} = 2.0 V; V_{EE} = 0 V		-	72	345	ns
		V_{CC} = 4.5 V; V_{EE} = 0 V		-	29	69	ns
		V_{CC} = 5.0 V; V_{EE} = 0 V; C_L = 15 pF		-	22	-	ns
		V_{CC} = 6.0 V; V_{EE} = 0 V		-	21	59	ns
		V_{CC} = 4.5 V; V_{EE} = −4.5 V		-	18	51	ns
		Sn to V_{os}; $R_L = \infty\ \Omega$; see Figure 14	[2]				
		V_{CC} = 2.0 V; V_{EE} = 0 V		-	66	345	ns
		V_{CC} = 4.5 V; V_{EE} = 0 V		-	28	69	ns
		V_{CC} = 5.0 V; V_{EE} = 0 V; C_L = 15 pF		-	20	-	ns
		V_{CC} = 6.0 V; V_{EE} = 0 V		-	19	59	ns
		V_{CC} = 4.5 V; V_{EE} = −4.5 V		-	16	51	ns
t_{off}	turn-off time	$\overline{E}$ to V_{os}; R_L = 1 kΩ; see Figure 14	[3]				
		V_{CC} = 2.0 V; V_{EE} = 0 V		-	58	290	ns
		V_{CC} = 4.5 V; V_{EE} = 0 V		-	31	58	ns
		V_{CC} = 5.0 V; V_{EE} = 0 V; C_L = 15 pF		-	18	-	ns
		V_{CC} = 6.0 V; V_{EE} = 0 V		-	17	49	ns
		V_{CC} = 4.5 V; V_{EE} = −4.5 V		-	18	42	ns
		Sn to V_{os}; R_L = 1 kΩ; see Figure 14	[3]				
		V_{CC} = 2.0 V; V_{EE} = 0 V		-	61	290	ns
		V_{CC} = 4.5 V; V_{EE} = 0 V		-	25	58	ns
		V_{CC} = 5.0 V; V_{EE} = 0 V; C_L = 15 pF		-	19	-	ns
		V_{CC} = 6.0 V; V_{EE} = 0 V		-	18	49	ns
		V_{CC} = 4.5 V; V_{EE} = −4.5 V		-	18	42	ns
C_{PD}	power dissipation capacitance	per switch; V_I = GND to V_{CC}	[4]	-	25	-	pF
T_{amb} = −40 °C to +85 °C							
t_{pd}	propagation delay	V_{is} to V_{os}; $R_L = \infty\ \Omega$; see Figure 13	[1]				
		V_{CC} = 2.0 V; V_{EE} = 0 V		-	-	75	ns
		V_{CC} = 4.5 V; V_{EE} = 0 V		-	-	15	ns
		V_{CC} = 6.0 V; V_{EE} = 0 V		-	-	13	ns
		V_{CC} = 4.5 V; V_{EE} = −4.5 V		-	-	10	ns

All information provided in this document is subject to legal disclaimers.

© NXP B.V. 2011. All rights reserved.

Table 9. Dynamic characteristics for 74HC4051 *...continued*

GND = 0 V; $t_r = t_f = 6$ ns; $C_L = 50$ pF; for test circuit see Figure 15.
V_{is} is the input voltage at a Yn or Z terminal, whichever is assigned as an input.
V_{os} is the output voltage at a Yn or Z terminal, whichever is assigned as an output.

Symbol	Parameter	Conditions		Min	Typ	Max	Unit
t_{on}	turn-on time	$\overline{E}$ to V_{os}; $R_L = \infty\ \Omega$; see Figure 14	[2]				
		V_{CC} = 2.0 V; V_{EE} = 0 V		-	-	430	ns
		V_{CC} = 4.5 V; V_{EE} = 0 V		-	-	86	ns
		V_{CC} = 6.0 V; V_{EE} = 0 V		-	-	73	ns
		V_{CC} = 4.5 V; V_{EE} = −4.5 V		-	-	64	ns
		Sn to V_{os}; $R_L = \infty\ \Omega$; see Figure 14	[2]				
		V_{CC} = 2.0 V; V_{EE} = 0 V		-	-	430	ns
		V_{CC} = 4.5 V; V_{EE} = 0 V		-	-	86	ns
		V_{CC} = 6.0 V; V_{EE} = 0 V		-	-	73	ns
		V_{CC} = 4.5 V; V_{EE} = −4.5 V		-	-	64	ns
t_{off}	turn-off time	$\overline{E}$ to V_{os}; R_L = 1 kΩ; see Figure 14	[3]				
		V_{CC} = 2.0 V; V_{EE} = 0 V		-	-	365	ns
		V_{CC} = 4.5 V; V_{EE} = 0 V		-	-	73	ns
		V_{CC} = 6.0 V; V_{EE} = 0 V		-	-	62	ns
		V_{CC} = 4.5 V; V_{EE} = −4.5 V		-	-	53	ns
		Sn to V_{os}; R_L = 1 kΩ; see Figure 14	[3]				
		V_{CC} = 2.0 V; V_{EE} = 0 V		-	-	365	ns
		V_{CC} = 4.5 V; V_{EE} = 0 V		-	-	73	ns
		V_{CC} = 6.0 V; V_{EE} = 0 V		-	-	62	ns
		V_{CC} = 4.5 V; V_{EE} = −4.5 V		-	-	53	ns
T_{amb} = −40 °C to +125 °C							
t_{pd}	propagation delay	V_{is} to V_{os}; $R_L = \infty\ \Omega$; see Figure 13	[1]				
		V_{CC} = 2.0 V; V_{EE} = 0 V		-	-	90	ns
		V_{CC} = 4.5 V; V_{EE} = 0 V		-	-	18	ns
		V_{CC} = 6.0 V; V_{EE} = 0 V		-	-	15	ns
		V_{CC} = 4.5 V; V_{EE} = −4.5 V		-	-	12	ns
t_{on}	turn-on time	$\overline{E}$ to V_{os}; $R_L = \infty\ \Omega$; see Figure 14	[2]				
		V_{CC} = 2.0 V; V_{EE} = 0 V		-	-	520	ns
		V_{CC} = 4.5 V; V_{EE} = 0 V		-	-	104	ns
		V_{CC} = 6.0 V; V_{EE} = 0 V		-	-	88	ns
		V_{CC} = 4.5 V; V_{EE} = −4.5 V		-	-	77	ns
		Sn to V_{os}; $R_L = \infty\ \Omega$; see Figure 14	[2]				
		V_{CC} = 2.0 V; V_{EE} = 0 V		-	-	520	ns
		V_{CC} = 4.5 V; V_{EE} = 0 V		-	-	104	ns
		V_{CC} = 6.0 V; V_{EE} = 0 V		-	-	88	ns
		V_{CC} = 4.5 V; V_{EE} = −4.5 V		-	-	77	ns

All information provided in this document is subject to legal disclaimers.

© NXP B.V. 2011. All rights reserved.

Table 9. Dynamic characteristics for 74HC4051 *...continued*

GND = 0 V; $t_r = t_f = 6$ ns; $C_L = 50$ pF; for test circuit see Figure 15.
V_{is} is the input voltage at a Yn or Z terminal, whichever is assigned as an input.
V_{os} is the output voltage at a Yn or Z terminal, whichever is assigned as an output.

Symbol	Parameter	Conditions		Min	Typ	Max	Unit
t_{off}	turn-off time	$\overline{E}$ to V_{os}; $R_L = 1$ kΩ; see Figure 14	[3]				
		$V_{CC} = 2.0$ V; $V_{EE} = 0$ V		-	-	435	ns
		$V_{CC} = 4.5$ V; $V_{EE} = 0$ V		-	-	87	ns
		$V_{CC} = 6.0$ V; $V_{EE} = 0$ V		-	-	74	ns
		$V_{CC} = 4.5$ V; $V_{EE} = -4.5$ V		-	-	72	ns
		Sn to V_{os}; $R_L = 1$ kΩ; see Figure 14	[3]				
		$V_{CC} = 2.0$ V; $V_{EE} = 0$ V		-	-	435	ns
		$V_{CC} = 4.5$ V; $V_{EE} = 0$ V		-	-	87	ns
		$V_{CC} = 6.0$ V; $V_{EE} = 0$ V		-	-	74	ns
		$V_{CC} = 4.5$ V; $V_{EE} = -4.5$ V		-	-	72	ns

[1] t_{pd} is the same as t_{PHL} and t_{PLH}.

[2] t_{on} is the same as t_{PZH} and t_{PZL}.

[3] t_{off} is the same as t_{PHZ} and t_{PLZ}.

[4] C_{PD} is used to determine the dynamic power dissipation (P_D in μW).
$P_D = C_{PD} \times V_{CC}^2 \times f_i \times N + \Sigma\{(C_L + C_{sw}) \times V_{CC}^2 \times f_o\}$ where:
f_i = input frequency in MHz;
f_o = output frequency in MHz;
N = number of inputs switching;
$\Sigma\{(C_L + C_{sw}) \times V_{CC}^2 \times f_o\}$ = sum of outputs;
C_L = output load capacitance in pF;
C_{sw} = switch capacitance in pF;
V_{CC} = supply voltage in V.

Table 10. Dynamic characteristics for 74HCT4051

GND = 0 V; $t_r = t_f = 6$ ns; $C_L = 50$ pF; for test circuit see Figure 15.
V_{is} is the input voltage at a Yn or Z terminal, whichever is assigned as an input.
V_{os} is the output voltage at a Yn or Z terminal, whichever is assigned as an output.

Symbol	Parameter	Conditions		Min	Typ	Max	Unit
T_{amb} = 25 °C							
t_{pd}	propagation delay	V_{is} to V_{os}; $R_L = \infty$ Ω; see Figure 13	[1]				
		$V_{CC} = 4.5$ V; $V_{EE} = 0$ V		-	5	12	ns
		$V_{CC} = 4.5$ V; $V_{EE} = -4.5$ V		-	4	8	ns
t_{on}	turn-on time	$\overline{E}$ to V_{os}; $R_L = 1$ kΩ; see Figure 14	[2]				
		$V_{CC} = 4.5$ V; $V_{EE} = 0$ V		-	26	55	ns
		$V_{CC} = 5.0$ V; $V_{EE} = 0$ V; $C_L = 15$ pF		-	22	-	ns
		$V_{CC} = 4.5$ V; $V_{EE} = -4.5$ V		-	16	39	ns
		Sn to V_{os}; $R_L = 1$ kΩ; see Figure 14	[2]				
		$V_{CC} = 4.5$ V; $V_{EE} = 0$ V		-	28	55	ns
		$V_{CC} = 5.0$ V; $V_{EE} = 0$ V; $C_L = 15$ pF		-	24	-	ns
		$V_{CC} = 4.5$ V; $V_{EE} = -4.5$ V		-	16	39	ns

All information provided in this document is subject to legal disclaimers.

© NXP B.V. 2011. All rights reserved.

Table 10. Dynamic characteristics for 74HCT4051 *...continued*

GND = 0 V; $t_r = t_f = 6$ ns; $C_L = 50$ pF; for test circuit see Figure 15.
V_{is} is the input voltage at a Yn or Z terminal, whichever is assigned as an input.
V_{os} is the output voltage at a Yn or Z terminal, whichever is assigned as an output.

Symbol	Parameter	Conditions		Min	Typ	Max	Unit
t_{off}	turn-off time	$\overline{E}$ to V_{os}; $R_L = 1$ kΩ; see Figure 14	[3]				
		$V_{CC} = 4.5$ V; $V_{EE} = 0$ V		-	19	45	ns
		$V_{CC} = 5.0$ V; $V_{EE} = 0$ V; $C_L = 15$ pF		-	16	-	ns
		$V_{CC} = 4.5$ V; $V_{EE} = -4.5$ V		-	16	32	ns
		Sn to V_{os}; $R_L = 1$ kΩ; see Figure 14	[3]				
		$V_{CC} = 4.5$ V; $V_{EE} = 0$ V		-	23	45	ns
		$V_{CC} = 5.0$ V; $V_{EE} = 0$ V; $C_L = 15$ pF		-	20	-	ns
		$V_{CC} = 4.5$ V; $V_{EE} = -4.5$ V		-	16	32	ns
C_{PD}	power dissipation capacitance	per switch; V_I = GND to $V_{CC} - 1.5$ V	[4]	-	25	-	pF
$T_{amb} = -40$ °C to +85 °C							
t_{pd}	propagation delay	V_{is} to V_{os}; $R_L = \infty$ Ω; see Figure 13	[1]				
		$V_{CC} = 4.5$ V; $V_{EE} = 0$ V		-	-	15	ns
		$V_{CC} = 4.5$ V; $V_{EE} = -4.5$ V		-	-	10	ns
t_{on}	turn-on time	$\overline{E}$ to V_{os}; $R_L = 1$ kΩ; see Figure 14	[2]				
		$V_{CC} = 4.5$ V; $V_{EE} = 0$ V		-	-	69	ns
		$V_{CC} = 4.5$ V; $V_{EE} = -4.5$ V		-	-	49	ns
		Sn to V_{os}; $R_L = 1$ kΩ; see Figure 14	[2]				
		$V_{CC} = 4.5$ V; $V_{EE} = 0$ V		-	-	69	ns
		$V_{CC} = 4.5$ V; $V_{EE} = -4.5$ V		-	-	49	ns
t_{off}	turn-off time	$\overline{E}$ to V_{os}; $R_L = 1$ kΩ; see Figure 14	[3]				
		$V_{CC} = 4.5$ V; $V_{EE} = 0$ V		-	-	56	ns
		$V_{CC} = 4.5$ V; $V_{EE} = -4.5$ V		-	-	40	ns
		Sn to V_{os}; $R_L = 1$ kΩ; see Figure 14	[3]				
		$V_{CC} = 4.5$ V; $V_{EE} = 0$ V		-	-	56	ns
		$V_{CC} = 4.5$ V; $V_{EE} = -4.5$ V		-	-	40	ns
$T_{amb} = -40$ °C to +125 °C							
t_{pd}	propagation delay	V_{is} to V_{os}; $R_L = \infty$ Ω; see Figure 13	[1]				
		$V_{CC} = 4.5$ V; $V_{EE} = 0$ V		-	-	18	ns
		$V_{CC} = 4.5$ V; $V_{EE} = -4.5$ V		-	-	12	ns
t_{on}	turn-on time	$\overline{E}$ to V_{os}; $R_L = 1$ kΩ; see Figure 14	[2]				
		$V_{CC} = 4.5$ V; $V_{EE} = 0$ V		-	-	83	ns
		$V_{CC} = 4.5$ V; $V_{EE} = -4.5$ V		-	-	59	ns
		Sn to V_{os}; $R_L = 1$ kΩ; see Figure 14	[2]				
		$V_{CC} = 4.5$ V; $V_{EE} = 0$ V		-	-	83	ns
		$V_{CC} = 4.5$ V; $V_{EE} = -4.5$ V		-	-	59	ns

All information provided in this document is subject to legal disclaimers.

© NXP B.V. 2011. All rights reserved.

Table 10. Dynamic characteristics for 74HCT4051 *...continued*

GND = 0 V; $t_r = t_f = 6$ ns; $C_L = 50$ pF; for test circuit see Figure 15.
V_{is} is the input voltage at a Yn or Z terminal, whichever is assigned as an input.
V_{os} is the output voltage at a Yn or Z terminal, whichever is assigned as an output.

Symbol	Parameter	Conditions		Min	Typ	Max	Unit
t_{off}	turn-off time	$\overline{E}$ to V_{os}; $R_L = 1$ kΩ; see Figure 14	[3]				
		$V_{CC} = 4.5$ V; $V_{EE} = 0$ V		-	-	68	ns
		$V_{CC} = 4.5$ V; $V_{EE} = -4.5$ V		-	-	48	ns
		Sn to V_{os}; $R_L = 1$ kΩ; see Figure 14	[3]				
		$V_{CC} = 4.5$ V; $V_{EE} = 0$ V		-	-	68	ns
		$V_{CC} = 4.5$ V; $V_{EE} = -4.5$ V		-	-	48	ns

[1] t_{pd} is the same as t_{PHL} and t_{PLH}.

[2] t_{on} is the same as t_{PZH} and t_{PZL}.

[3] t_{off} is the same as t_{PHZ} and t_{PLZ}.

[4] C_{PD} is used to determine the dynamic power dissipation (P_D in μW).
$P_D = C_{PD} \times V_{CC}^2 \times f_i \times N + \Sigma\{(C_L + C_{sw}) \times V_{CC}^2 \times f_o\}$ where:
f_i = input frequency in MHz;
f_o = output frequency in MHz;
N = number of inputs switching;
$\Sigma\{(C_L + C_{sw}) \times V_{CC}^2 \times f_o\}$ = sum of outputs;
C_L = output load capacitance in pF;
C_{sw} = switch capacitance in pF;
V_{CC} = supply voltage in V.

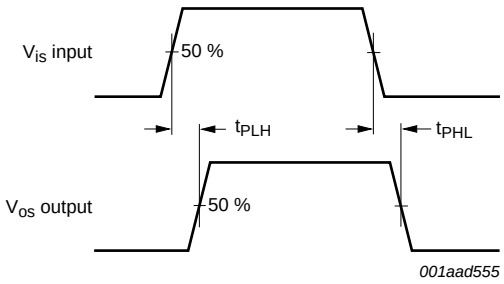

Fig 13. Input (V_{is}) to output (V_{os}) propagation delays

All information provided in this document is subject to legal disclaimers.

© NXP B.V. 2011. All rights reserved.

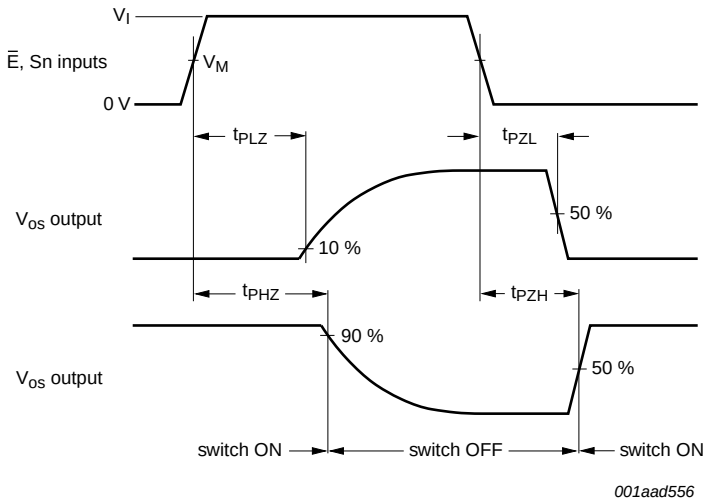

For 74HC4051: $V_M = 0.5 \times V_{CC}$.

For 74HCT4051: $V_M = 1.3$ V.

Fig 14. Turn-on and turn-off times

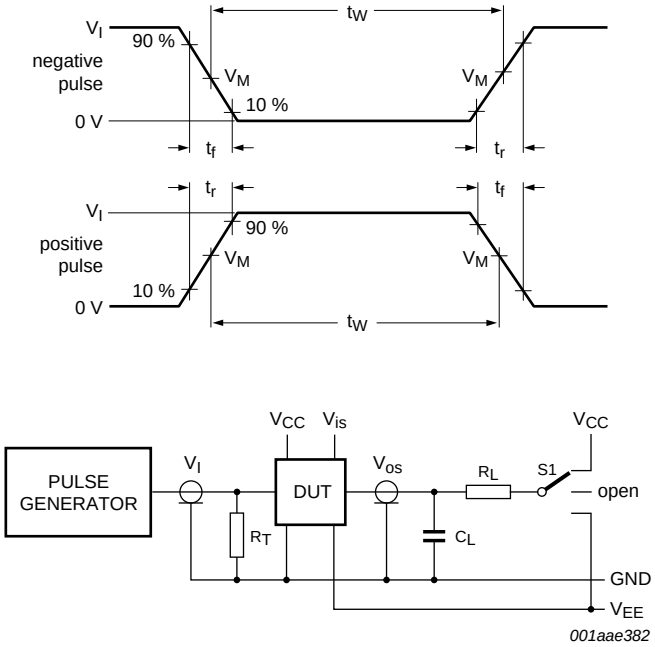

Definitions for test circuit; see Table 11:

R_T = termination resistance should be equal to the output impedance Z_o of the pulse generator.

C_L = load capacitance including jig and probe capacitance.

R_L = load resistance.

S1 = Test selection switch.

Fig 15. Test circuit for measuring AC performance

All information provided in this document is subject to legal disclaimers.

© NXP B.V. 2011. All rights reserved.

Table 11. Test data

Test	Input				Load		S1 position
	V_I	V_{is}	t_r, t_f		C_L	R_L	
			at f_{max}	other[1]			
t_{PHL}, t_{PLH}	[2]	pulse	< 2 ns	6 ns	50 pF	1 kΩ	open
t_{PZH}, t_{PHZ}	[2]	V_{CC}	< 2 ns	6 ns	50 pF	1 kΩ	V_{EE}
t_{PZL}, t_{PLZ}	[2]	V_{EE}	< 2 ns	6 ns	50 pF	1 kΩ	V_{CC}

[1] $t_r = t_f = 6$ ns; when measuring f_{max}, there is no constraint to t_r and t_f with 50 % duty factor.

[2] V_I values:

a) For 74HC4051: $V_I = V_{CC}$

b) For 74HCT4051: $V_I = 3$ V

12. Additional dynamic characteristics

Table 12. Additional dynamic characteristics

Recommended conditions and typical values; GND = 0 V; T_{amb} = 25 °C; C_L = 50 pF.
V_{is} is the input voltage at pins nYn or nZ, whichever is assigned as an input.
V_{os} is the output voltage at pins nYn or nZ, whichever is assigned as an output.

Symbol	Parameter	Conditions		Min	Typ	Max	Unit
d_{sin}	sine-wave distortion	f_i = 1 kHz; R_L = 10 kΩ; see Figure 16					
		V_{is} = 4.0 V (p-p); V_{CC} = 2.25 V; V_{EE} = −2.25 V		-	0.04	-	%
		V_{is} = 8.0 V (p-p); V_{CC} = 4.5 V; V_{EE} = −4.5 V		-	0.02	-	%
		f_i = 10 kHz; R_L = 10 kΩ; see Figure 16					
		V_{is} = 4.0 V (p-p); V_{CC} = 2.25 V; V_{EE} = −2.25 V		-	0.12	-	%
		V_{is} = 8.0 V (p-p); V_{CC} = 4.5 V; V_{EE} = −4.5 V		-	0.06	-	%
α_{iso}	isolation (OFF-state)	R_L = 600 Ω; f_i = 1 MHz; see Figure 17					
		V_{CC} = 2.25 V; V_{EE} = −2.25 V	[1]	-	−50	-	dB
		V_{CC} = 4.5 V; V_{EE} = −4.5 V	[1]	-	−50	-	dB
V_{ct}	crosstalk voltage	peak-to-peak value; between control and any switch; R_L = 600 Ω; f_i = 1 MHz; $\overline{E}$ or Sn square wave between V_{CC} and GND; $t_r = t_f$ = 6 ns; see Figure 18					
		V_{CC} = 4.5 V; V_{EE} = 0 V		-	110	-	mV
		V_{CC} = 4.5 V; V_{EE} = −4.5 V		-	220	-	mV
$f_{(-3dB)}$	−3 dB frequency response	R_L = 50 Ω; see Figure 19					
		V_{CC} = 2.25 V; V_{EE} = −2.25 V	[2]	-	170	-	MHz
		V_{CC} = 4.5 V; V_{EE} = −4.5 V	[2]	-	180	-	MHz

[1] Adjust input voltage V_{is} to 0 dBm level (0 dBm = 1 mW into 600 Ω).

[2] Adjust input voltage V_{is} to 0 dBm level at V_{os} for 1 MHz (0 dBm = 1 mW into 50 Ω).

All information provided in this document is subject to legal disclaimers.

© NXP B.V. 2011. All rights reserved.

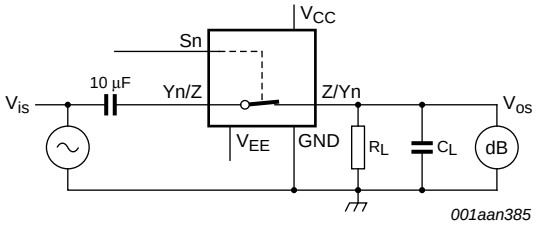

Fig 16. Test circuit for measuring sine-wave distortion

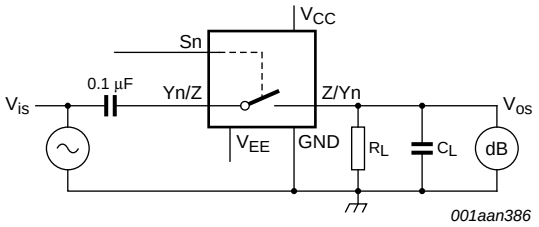

V_{CC} = 4.5 V; GND = 0 V; V_{EE} = −4.5 V; R_L = 600 Ω; R_S = 1 kΩ.

a. Test circuit

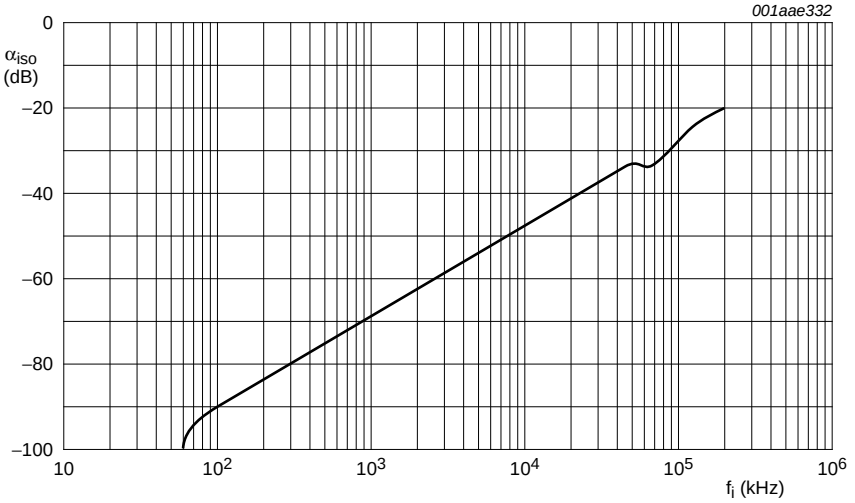

b. Isolation (OFF-state) as a function of frequency

Fig 17. Test circuit for measuring isolation (OFF-state)

All information provided in this document is subject to legal disclaimers.

© NXP B.V. 2011. All rights reserved.

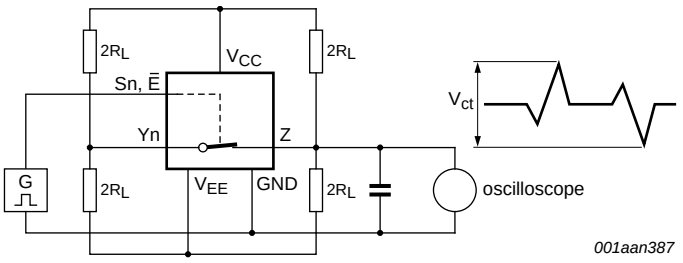

Fig 18. Test circuit for measuring crosstalk between control input and any switch

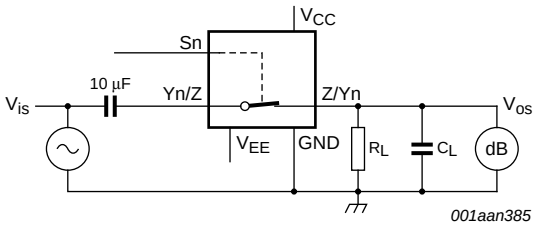

V_{CC} = 4.5 V; GND = 0 V; V_{EE} = −4.5 V; R_L = 50 Ω; R_S = 1 kΩ.

a. Test circuit

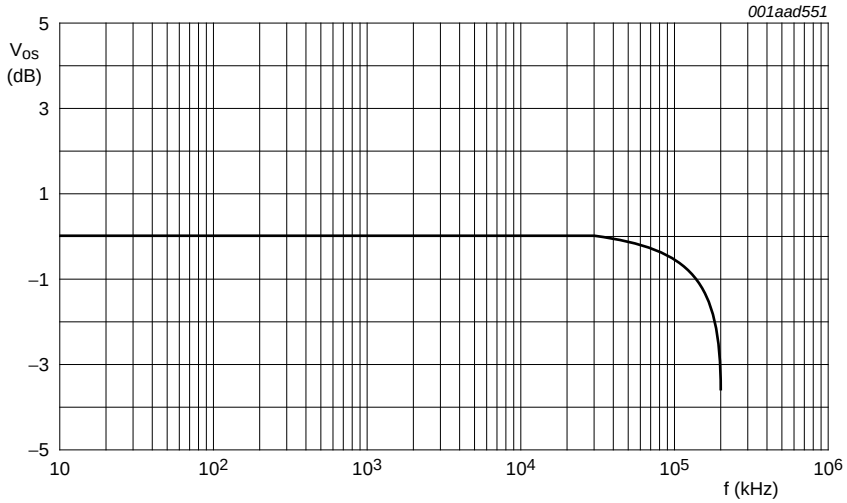

b. Typical frequency response

Fig 19. Test circuit for frequency response

All information provided in this document is subject to legal disclaimers.

© NXP B.V. 2011. All rights reserved.

13. Package outline

DIP16: plastic dual in-line package; 16 leads (300 mil) **SOT38-4**

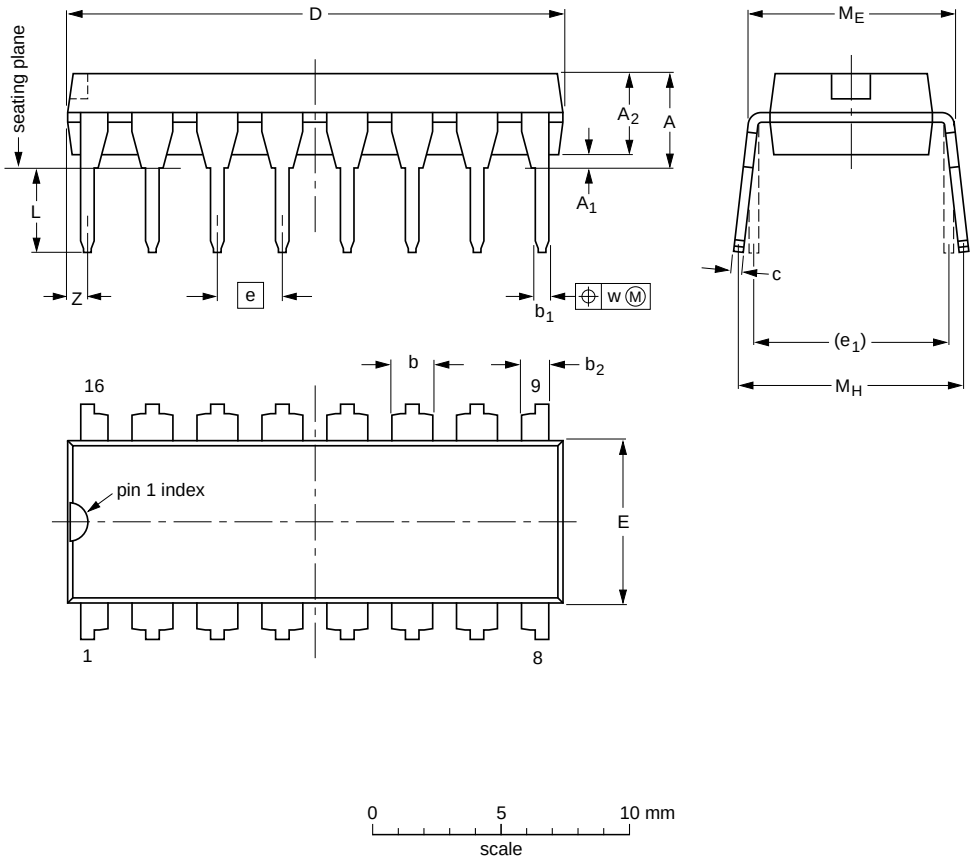

DIMENSIONS (inch dimensions are derived from the original mm dimensions)

UNIT	A max.	A_1 min.	A_2 max.	b	b_1	b_2	c	D (1)	E (1)	e	e_1	L	M_E	M_H	w	Z (1) max.
mm	4.2	0.51	3.2	1.73 1.30	0.53 0.38	1.25 0.85	0.36 0.23	19.50 18.55	6.48 6.20	2.54	7.62	3.60 3.05	8.25 7.80	10.0 8.3	0.254	0.76
inches	0.17	0.02	0.13	0.068 0.051	0.021 0.015	0.049 0.033	0.014 0.009	0.77 0.73	0.26 0.24	0.1	0.3	0.14 0.12	0.32 0.31	0.39 0.33	0.01	0.03

Note

1. Plastic or metal protrusions of 0.25 mm (0.01 inch) maximum per side are not included.

OUTLINE VERSION	REFERENCES				EUROPEAN PROJECTION	ISSUE DATE
	IEC	JEDEC	JEITA			
SOT38-4						~~95-01-14~~ 03-02-13

Fig 20. Package outline SOT38-4 (DIP16)

All information provided in this document is subject to legal disclaimers.

© NXP B.V. 2011. All rights reserved.

SO16: plastic small outline package; 16 leads; body width 3.9 mm **SOT109-1**

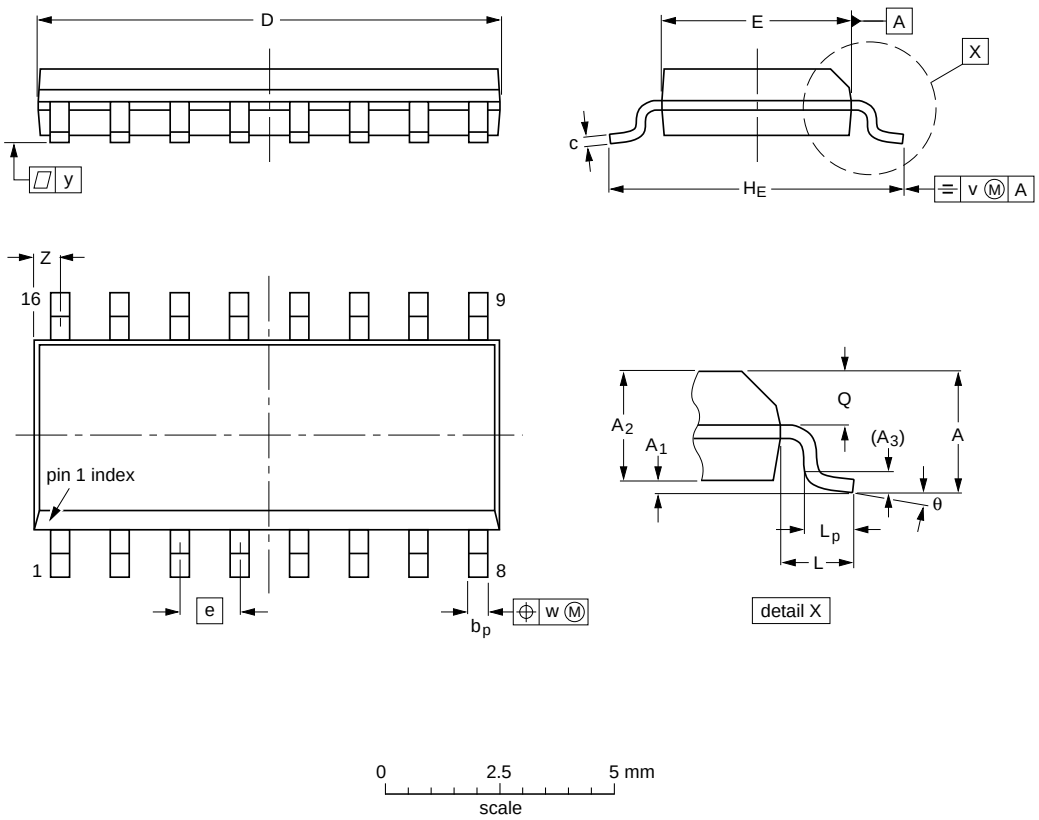

DIMENSIONS (inch dimensions are derived from the original mm dimensions)

UNIT	A max.	A_1	A_2	A_3	b_p	c	D(1)	E(1)	e	H_E	L	L_p	Q	v	w	y	Z(1)	θ
mm	1.75	0.25 0.10	1.45 1.25	0.25	0.49 0.36	0.25 0.19	10.0 9.8	4.0 3.8	1.27	6.2 5.8	1.05	1.0 0.4	0.7 0.6	0.25	0.25	0.1	0.7 0.3	8° 0°
inches	0.069	0.010 0.004	0.057 0.049	0.01	0.019 0.014	0.0100 0.0075	0.39 0.38	0.16 0.15	0.05	0.244 0.228	0.041	0.039 0.016	0.028 0.020	0.01	0.01	0.004	0.028 0.012	

Note

1. Plastic or metal protrusions of 0.15 mm (0.006 inch) maximum per side are not included.

OUTLINE VERSION	REFERENCES				EUROPEAN PROJECTION	ISSUE DATE
	IEC	JEDEC	JEITA			
SOT109-1	076E07	MS-012				~~99-12-27~~ 03-02-19

Fig 21. Package outline SOT109-1 (SO16)

All information provided in this document is subject to legal disclaimers.

© NXP B.V. 2011. All rights reserved.

SSOP16: plastic shrink small outline package; 16 leads; body width 5.3 mm **SOT338-1**

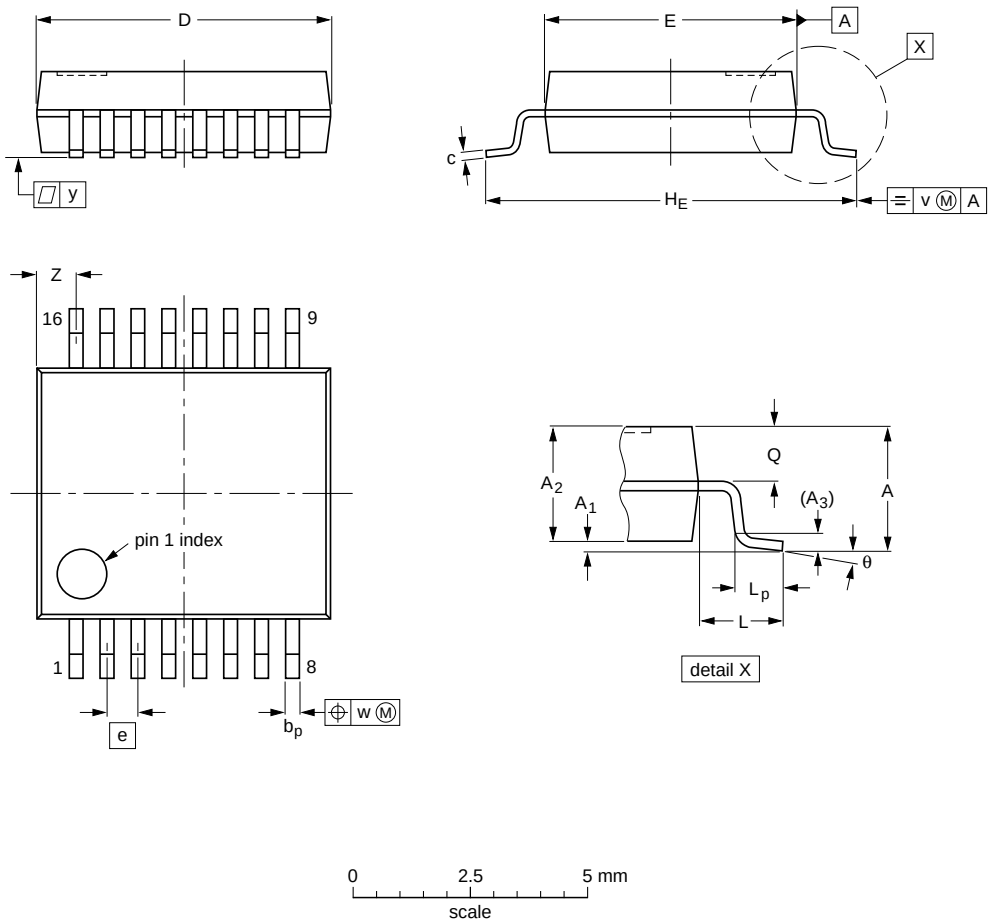

DIMENSIONS (mm are the original dimensions)

UNIT	A max.	A_1	A_2	A_3	b_p	c	D (1)	E (1)	e	H_E	L	L_p	Q	v	w	y	Z (1)	θ
mm	2	0.21 0.05	1.80 1.65	0.25	0.38 0.25	0.20 0.09	6.4 6.0	5.4 5.2	0.65	7.9 7.6	1.25	1.03 0.63	0.9 0.7	0.2	0.13	0.1	1.00 0.55	8° 0°

Note

1. Plastic or metal protrusions of 0.25 mm maximum per side are not included.

OUTLINE VERSION	REFERENCES				EUROPEAN PROJECTION	ISSUE DATE
	IEC	JEDEC	JEITA			
SOT338-1		MO-150				~~99-12-27~~ 03-02-19

Fig 22. Package outline SOT338-1 (SSOP16)

All information provided in this document is subject to legal disclaimers.

© NXP B.V. 2011. All rights reserved.

TSSOP16: plastic thin shrink small outline package; 16 leads; body width 4.4 mm **SOT403-1**

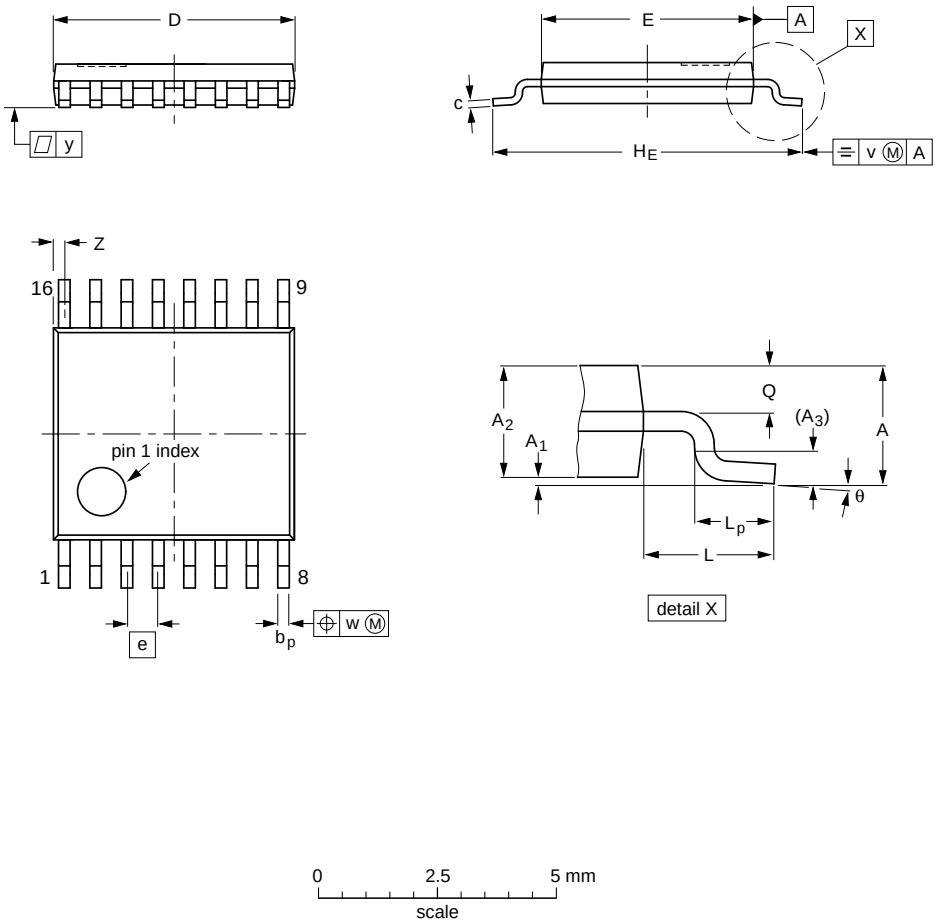

DIMENSIONS (mm are the original dimensions)

UNIT	A max.	A_1	A_2	A_3	b_p	c	D (1)	E (2)	e	H_E	L	L_p	Q	v	w	y	Z (1)	θ
mm	1.1	0.15 0.05	0.95 0.80	0.25	0.30 0.19	0.2 0.1	5.1 4.9	4.5 4.3	0.65	6.6 6.2	1	0.75 0.50	0.4 0.3	0.2	0.13	0.1	0.40 0.06	8° 0°

Notes

1. Plastic or metal protrusions of 0.15 mm maximum per side are not included.
2. Plastic interlead protrusions of 0.25 mm maximum per side are not included.

OUTLINE VERSION	REFERENCES				EUROPEAN PROJECTION	ISSUE DATE
	IEC	JEDEC	JEITA			
SOT403-1		MO-153				~~99-12-27~~ 03-02-18

Fig 23. Package outline SOT403-1 (TSSOP16)

All information provided in this document is subject to legal disclaimers.

© NXP B.V. 2011. All rights reserved.

DHVQFN16: plastic dual in-line compatible thermal enhanced very thin quad flat package; no leads; 16 terminals; body 2.5 x 3.5 x 0.85 mm **SOT763-1**

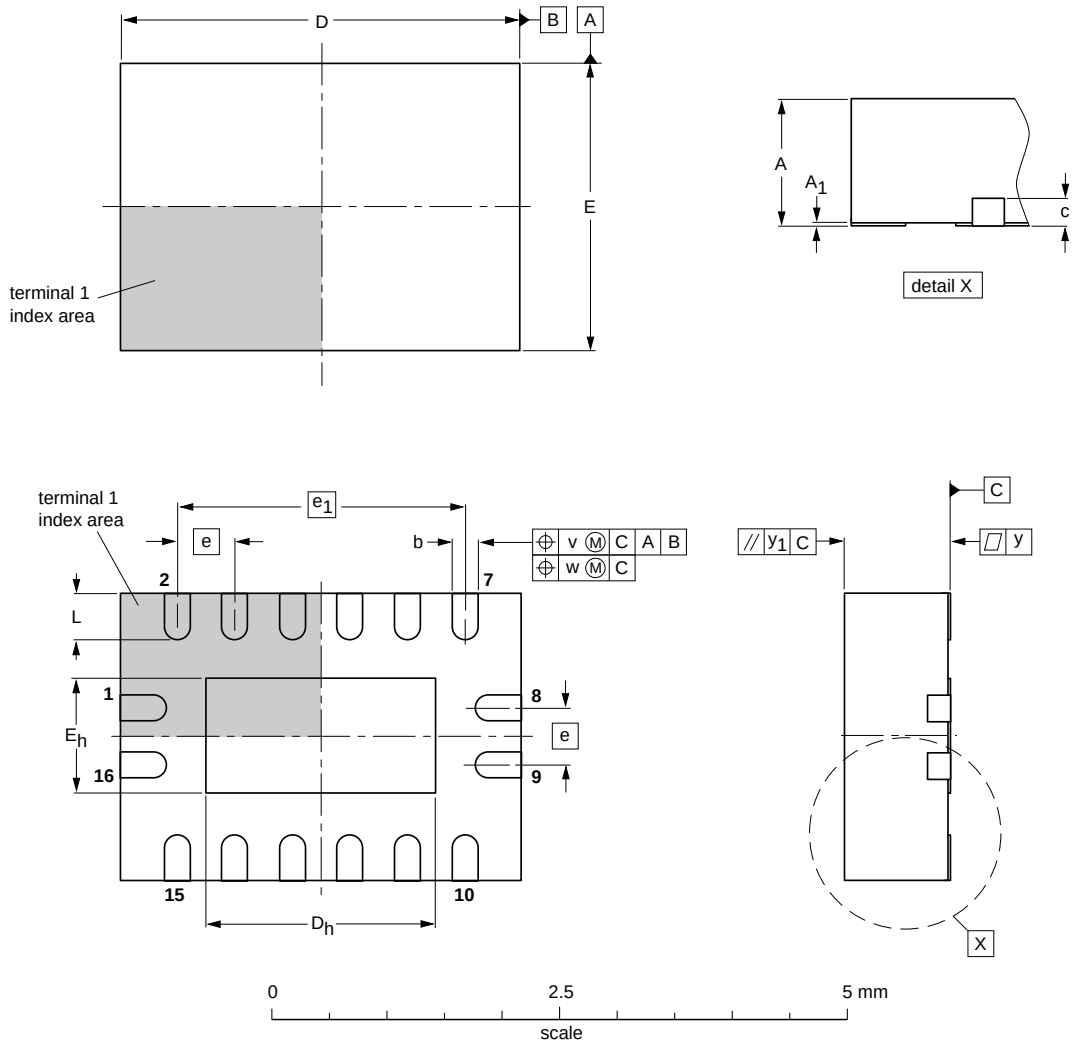

DIMENSIONS (mm are the original dimensions)

UNIT	A(1) max.	A_1	b	c	D(1)	D_h	E(1)	E_h	e	e_1	L	v	w	y	y_1
mm	1	0.05 0.00	0.30 0.18	0.2	3.6 3.4	2.15 1.85	2.6 2.4	1.15 0.85	0.5	2.5	0.5 0.3	0.1	0.05	0.05	0.1

Note

1. Plastic or metal protrusions of 0.075 mm maximum per side are not included.

OUTLINE VERSION	REFERENCES				EUROPEAN PROJECTION	ISSUE DATE
	IEC	JEDEC	JEITA			
SOT763-1	- - -	MO-241	- - -			~~02-10-17~~ 03-01-27

Fig 24. Package outline SOT763-1 (DHVQFN16)

All information provided in this document is subject to legal disclaimers.

© NXP B.V. 2011. All rights reserved.

14. Abbreviations

Table 13. Abbreviations

Acronym	Description
CMOS	Complementary Metal-Oxide Semiconductor
ESD	ElectroStatic Discharge
HBM	Human Body Model
MM	Machine Model
TTL	Transistor-Transistor Logic

15. Revision history

Table 14. Revision history

Document ID	Release date	Data sheet status	Change notice	Supersedes
74HC_HCT4051 v.6	20111213	Product data sheet	-	74HC_HCT4051 v.5
Modifications:	• Legal pages updated.			
74HC_HCT4051 v.5	20110513	Product data sheet	-	74HC_HCT4051 v.4
74HC_HCT4051 v.4	20110117	Product data sheet	-	74HC_HCT4051 v.3
74HC_HCT4051 v.3	20051219	Product specification	-	74HC_HCT4051_CNV_2

All information provided in this document is subject to legal disclaimers.

© NXP B.V. 2011. All rights reserved.

16. Legal information

16.1 Data sheet status

Document status[1][2]	Product status[3]	Definition
Objective [short] data sheet	Development	This document contains data from the objective specification for product development.
Preliminary [short] data sheet	Qualification	This document contains data from the preliminary specification.
Product [short] data sheet	Production	This document contains the product specification.

[1] Please consult the most recently issued document before initiating or completing a design.

[2] The term 'short data sheet' is explained in section "Definitions".

[3] The product status of device(s) described in this document may have changed since this document was published and may differ in case of multiple devices. The latest product status information is available on the Internet at URL http://www.nxp.com.

16.2 Definitions

Draft — The document is a draft version only. The content is still under internal review and subject to formal approval, which may result in modifications or additions. NXP Semiconductors does not give any representations or warranties as to the accuracy or completeness of information included herein and shall have no liability for the consequences of use of such information.

Short data sheet — A short data sheet is an extract from a full data sheet with the same product type number(s) and title. A short data sheet is intended for quick reference only and should not be relied upon to contain detailed and full information. For detailed and full information see the relevant full data sheet, which is available on request via the local NXP Semiconductors sales office. In case of any inconsistency or conflict with the short data sheet, the full data sheet shall prevail.

Product specification — The information and data provided in a Product data sheet shall define the specification of the product as agreed between NXP Semiconductors and its customer, unless NXP Semiconductors and customer have explicitly agreed otherwise in writing. In no event however, shall an agreement be valid in which the NXP Semiconductors product is deemed to offer functions and qualities beyond those described in the Product data sheet.

16.3 Disclaimers

Limited warranty and liability — Information in this document is believed to be accurate and reliable. However, NXP Semiconductors does not give any representations or warranties, expressed or implied, as to the accuracy or completeness of such information and shall have no liability for the consequences of use of such information.

In no event shall NXP Semiconductors be liable for any indirect, incidental, punitive, special or consequential damages (including - without limitation - lost profits, lost savings, business interruption, costs related to the removal or replacement of any products or rework charges) whether or not such damages are based on tort (including negligence), warranty, breach of contract or any other legal theory.

Notwithstanding any damages that customer might incur for any reason whatsoever, NXP Semiconductors' aggregate and cumulative liability towards customer for the products described herein shall be limited in accordance with the *Terms and conditions of commercial sale* of NXP Semiconductors.

Right to make changes — NXP Semiconductors reserves the right to make changes to information published in this document, including without limitation specifications and product descriptions, at any time and without notice. This document supersedes and replaces all information supplied prior to the publication hereof.

Suitability for use — NXP Semiconductors products are not designed, authorized or warranted to be suitable for use in life support, life-critical or safety-critical systems or equipment, nor in applications where failure or malfunction of an NXP Semiconductors product can reasonably be expected to result in personal injury, death or severe property or environmental damage. NXP Semiconductors accepts no liability for inclusion and/or use of NXP Semiconductors products in such equipment or applications and therefore such inclusion and/or use is at the customer's own risk.

Applications — Applications that are described herein for any of these products are for illustrative purposes only. NXP Semiconductors makes no representation or warranty that such applications will be suitable for the specified use without further testing or modification.

Customers are responsible for the design and operation of their applications and products using NXP Semiconductors products, and NXP Semiconductors accepts no liability for any assistance with applications or customer product design. It is customer's sole responsibility to determine whether the NXP Semiconductors product is suitable and fit for the customer's applications and products planned, as well as for the planned application and use of customer's third party customer(s). Customers should provide appropriate design and operating safeguards to minimize the risks associated with their applications and products.

NXP Semiconductors does not accept any liability related to any default, damage, costs or problem which is based on any weakness or default in the customer's applications or products, or the application or use by customer's third party customer(s). Customer is responsible for doing all necessary testing for the customer's applications and products using NXP Semiconductors products in order to avoid a default of the applications and the products or of the application or use by customer's third party customer(s). NXP does not accept any liability in this respect.

Limiting values — Stress above one or more limiting values (as defined in the Absolute Maximum Ratings System of IEC 60134) will cause permanent damage to the device. Limiting values are stress ratings only and (proper) operation of the device at these or any other conditions above those given in the Recommended operating conditions section (if present) or the Characteristics sections of this document is not warranted. Constant or repeated exposure to limiting values will permanently and irreversibly affect the quality and reliability of the device.

Terms and conditions of commercial sale — NXP Semiconductors products are sold subject to the general terms and conditions of commercial sale, as published at http://www.nxp.com/profile/terms, unless otherwise agreed in a valid written individual agreement. In case an individual agreement is concluded only the terms and conditions of the respective agreement shall apply. NXP Semiconductors hereby expressly objects to applying the customer's general terms and conditions with regard to the purchase of NXP Semiconductors products by customer.

No offer to sell or license — Nothing in this document may be interpreted or construed as an offer to sell products that is open for acceptance or the grant, conveyance or implication of any license under any copyrights, patents or other industrial or intellectual property rights.

Export control — This document as well as the item(s) described herein may be subject to export control regulations. Export might require a prior authorization from competent authorities.

All information provided in this document is subject to legal disclaimers.

© NXP B.V. 2011. All rights reserved.

Non-automotive qualified products — Unless this data sheet expressly states that this specific NXP Semiconductors product is automotive qualified, the product is not suitable for automotive use. It is neither qualified nor tested in accordance with automotive testing or application requirements. NXP Semiconductors accepts no liability for inclusion and/or use of non-automotive qualified products in automotive equipment or applications.

In the event that customer uses the product for design-in and use in automotive applications to automotive specifications and standards, customer (a) shall use the product without NXP Semiconductors' warranty of the product for such automotive applications, use and specifications, and (b) whenever customer uses the product for automotive applications beyond NXP Semiconductors' specifications such use shall be solely at customer's own risk, and (c) customer fully indemnifies NXP Semiconductors for any liability, damages or failed product claims resulting from customer design and use of the product for automotive applications beyond NXP Semiconductors' standard warranty and NXP Semiconductors' product specifications.

16.4 Trademarks

Notice: All referenced brands, product names, service names and trademarks are the property of their respective owners.

17. Contact information

For more information, please visit: **http://www.nxp.com**

For sales office addresses, please send an email to: **salesaddresses@nxp.com**

All information provided in this document is subject to legal disclaimers.

© NXP B.V. 2011. All rights reserved.

18. Contents

1 General description 1
2 Features and benefits 1
3 Applications 1
4 Ordering information 2
5 Functional diagram 2
6 Pinning information 4
6.1 Pinning 4
6.2 Pin description 4
7 Functional description 5
7.1 Function table 5
8 Limiting values 5
9 Recommended operating conditions 6
10 Static characteristics 7
11 Dynamic characteristics 13
12 Additional dynamic characteristics 20
13 Package outline 23
14 Abbreviations 28
15 Revision history 28
16 Legal information 29
16.1 Data sheet status 29
16.2 Definitions 29
16.3 Disclaimers 29
16.4 Trademarks 30
17 Contact information 30
18 Contents 31

Please be aware that important notices concerning this document and the product(s) described herein, have been included in section 'Legal information'.

© NXP B.V. 2011. All rights reserved.

For more information, please visit: http://www.nxp.com
For sales office addresses, please send an email to: salesaddresses@nxp.com

Date of release: 13 December 2011
Document identifier: 74HC_HCT4051

О компании

ООО "ТрейдЭлектроникс" - это оперативные поставки широкого спектра электронных компонентов отечественного и импортного производства напрямую от производителей и с крупнейших мировых складов. Реализуемая нашей компанией продукция насчитывает более полумиллиона наименований.

Благодаря этому наша компания предлагает к поставке практически не ограниченный ассортимент компонентов как оптовыми, мелкооптовыми партиями, так и в розницу.

Наличие собственной эффективной системы логистики обеспечивает надежную поставку продукции по конкурентным ценам в точно указанные сроки.

Срок поставки со стоков в **Европе и Америке – от 3 до 14 дней.**

Срок поставки из **Азии – от 10 дней.**

Благодаря развитой сети поставщиков, помогаем в поиске и приобретении экзотичных или снятых с производства компонентов.

Предоставляем спец цены на элементы для создания инженерных сэмплов.

Упорный труд, качественный результат дают нам право быть уверенными в себе и надежными для наших клиентов.

Наша компания это:

- Гарантия качества поставляемой продукции
- Широкий ассортимент
- Минимальные сроки поставок
- Техническая поддержка
- Подбор комплектации
- Индивидуальный подход
- Гибкое ценообразование

Наша организация особенно сильна в поставках модулей, микросхем, пассивных компонентов, ксайленсах (XC), EPF, EPM и силовой электроники.

Большой выбор предлагаемой продукции, различные виды оплаты и доставки, позволят Вам сэкономить время и получить максимум выгоды от сотрудничества с нами!

Trade Electronics.ru

гарантия бесперебойности производства и качества выпускаемой продукции

Перечень производителей, продукцию которых мы поставляем на российский рынок

AMD
ANALOG DEVICES
BOURNS
Coilcraft
élantec Semiconductor, Inc.
HARRIS
Infineon
JRC
MICREL
MOTOROLA
nichicon
PHILIPS
ROHM
SGS-THOMSON
Sipex
TAIYO YUDEN
TOKO
ZILOG
Winbond
Allegro
ATMEL
BURR - BROWN
EXAR
HITACHI
intel
Lattice
muRata
OKI
QUALCOMM
SAMSUNG
SHARP
SONY
TDK
TOSHIBA
KYOCERA
ALTERA
AVX
CITILYST
CYPRESS
FAIRCHILD SEMICONDUCTOR
HOLTEK
International IOR Rectifier
LINEAR TECHNOLOGY
MITSUBISHI
National Semiconductor
ON Semiconductor
REALTEK
SANYO
SHINDENGEN
SGS
TECCOR
TUNDRA
XILINX
Amphenol
Bay Linear
CIRRUS LOGIC
DALLAS
FUJITSU
IDT
intersil
MAXIM
molex
NEC
Panasonic
RENESAS
SII
SIEMENS
ST
Texas Instruments
VISHAY
ZETEX SEMICONDUCTORS

Trade Electronics.ru

гарантия бесперебойности производства и качества выпускаемой продукции

С удовольствием будем прорабатывать для Вас поставки всех необходимых компонентов по текущим запросам для скорейшего выявления групп элементов, по которым сотрудничество именно с нашей компанией будет для Вас максимально выгодным!

С уважением,

Менеджер отдела продаж ООО

«Трейд Электроникс»

Шишлаков Евгений

8 (495)668-30-28 доб 169

manager28@tradeelectronics.ru

http://www.tradeelectronics.ru/