FAIRCHILD SEMICONDUCTOR®

January 2008

74AC240, 74ACT240
Octal Buffer/Line Driver with 3-STATE Outputs

Features

- I_{CC} and I_{OZ} reduced by 50%
- Inverting 3-STATE outputs drive bus lines or buffer memory address registers
- Outputs source/sink 24mA
- ACT240 has TTL-compatible inputs

General Description

The AC/ACT240 is an octal buffer and line driver designed to be employed as a memory address driver, clock driver and bus oriented transmitter or receiver which provides improved PC board density.

Ordering Information

Order Number	Package Number	Package Description
74AC240SC	M20B	20-Lead Small Outline Integrated Circuit (SOIC), JEDEC MS-013, 0.300" Wide
74AC240SJ	M20D	20-Lead Small Outline Package (SOP), EIAJ TYPE II, 5.3mm Wide
74AC240MTC	MTC20	20-Lead Thin Shrink Small Outline Package (TSSOP), JEDEC MO-153, 4.4mm Wide
74AC240PC	N20A	20-Lead Plastic Dual-In-Line Package (PDIP), JEDEC MS-001, 0.300" Wide
74ACT240SC	M20B	20-Lead Small Outline Integrated Circuit (SOIC), JEDEC MS-013, 0.300" Wide
74ACT240SJ	M20D	20-Lead Small Outline Package (SOP), EIAJ TYPE II, 5.3mm Wide
74ACT240MTC	MTC20	20-Lead Thin Shrink Small Outline Package (TSSOP), JEDEC MO-153, 4.4mm Wide
74ACT240PC	N20A	20-Lead Plastic Dual-In-Line Package (PDIP), JEDEC MS-001, 0.300" Wide

Device also available in Tape and Reel. Specify by appending suffix letter “X” to the ordering number.

All packages are lead free per JEDEC: J-STD-020B standard.

©2006 Fairchild Semiconductor Corporation

Connection Diagram

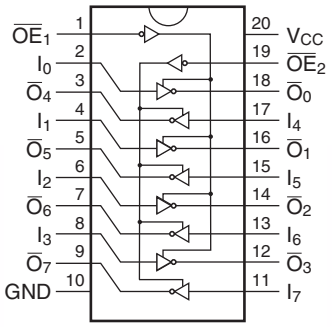

Logic Symbol

IEEE/IEC

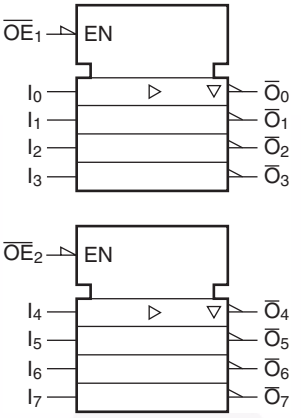

Pin Description

Pin Names	Description
$\overline{OE}_1$, $\overline{OE}_2$	3-STATE Output Enable Inputs
I_0–I_7	Inputs
$\overline{O}_0$–$\overline{O}_7$	Outputs

Truth Tables

Inputs		Outputs (Pins 12, 14, 16, 18)
$\overline{OE}_1$	I_n	
L	L	H
L	H	L
H	X	Z

Inputs		Outputs (Pins 3, 5, 7, 9)
$\overline{OE}_2$	I_n	
L	L	H
L	H	L
H	X	Z

H = HIGH Voltage Level

L = LOW Voltage Level

X = Immaterial

Z = High Impedance

Absolute Maximum Ratings

Stresses exceeding the absolute maximum ratings may damage the device. The device may not function or be operable above the recommended operating conditions and stressing the parts to these levels is not recommended. In addition, extended exposure to stresses above the recommended operating conditions may affect device reliability. The absolute maximum ratings are stress ratings only.

Symbol	Parameter	Rating
V_{CC}	Supply Voltage	–0.5V to +7.0V
I_{IK}	DC Input Diode Current $V_I = -0.5V$	–20mA
	$V_I = V_{CC} + 0.5$	+20mA
V_I	DC Input Voltage	–0.5V to V_{CC} + 0.5V
I_{OK}	DC Output Diode Current $V_O = -0.5V$	–20mA
	$V_O = V_{CC} + 0.5V$	+20mA
V_O	DC Output Voltage	–0.5V to V_{CC} + 0.5V
I_O	DC Output Source or Sink Current	±50mA
I_{CC} or I_{GND}	DC V_{CC} or Ground Current per Output Pin	±50mA
T_{STG}	Storage Temperature	–65°C to +150°C
T_J	Junction Temperature	140°C

Recommended Operating Conditions

The Recommended Operating Conditions table defines the conditions for actual device operation. Recommended operating conditions are specified to ensure optimal performance to the datasheet specifications. Fairchild does not recommend exceeding them or designing to absolute maximum ratings.

Symbol	Parameter	Rating
V_{CC}	Supply Voltage AC	2.0V to 6.0V
	ACT	4.5V to 5.5V
V_I	Input Voltage	0V to V_{CC}
V_O	Output Voltage	0V to V_{CC}
T_A	Operating Temperature	–40°C to +85°C
$\Delta V / \Delta t$	Minimum Input Edge Rate, AC Devices: V_{IN} from 30% to 70% of V_{CC}, V_{CC} @ 3.3V, 4.5V, 5.5V	125mV/ns
$\Delta V / \Delta t$	Minimum Input Edge Rate, ACT Devices: V_{IN} from 0.8V to 2.0V, V_{CC} @ 4.5V, 5.5V	125mV/ns

DC Electrical Characteristics for AC

Symbol	Parameter	V_{CC} (V)	Conditions	$T_A = +25°C$ Typ.	$T_A = -40°C$ to $+85°C$ Guaranteed Limits		Units
V_{IH}	Minimum HIGH Level Input Voltage	3.0	V_{OUT} = 0.1V or V_{CC} – 0.1V	1.5	2.1	2.1	V
		4.5		2.25	3.15	3.15	
		5.5		2.75	3.85	3.85	
V_{IL}	Maximum LOW Level Input Voltage	3.0	V_{OUT} = 0.1V or V_{CC} – 0.1V	1.5	0.9	0.9	V
		4.5		2.25	1.35	1.35	
		5.5		2.75	1.65	1.65	
V_{OH}	Minimum HIGH Level Output Voltage	3.0	I_{OUT} = –50μA	2.99	2.9	2.9	V
		4.5		4.49	4.4	4.4	
		5.5		5.49	5.4	5.4	
		3.0	$V_{IN} = V_{IL}$ or V_{IH}, I_{OH} = –12mA		2.56	2.46	
		4.5	$V_{IN} = V_{IL}$ or V_{IH}, I_{OH} = –24mA		3.86	3.76	
		5.5	$V_{IN} = V_{IL}$ or V_{IH}, I_{OH} = –24mA(1)		4.86	4.76	
V_{OL}	Maximum LOW Level Output Voltage	3.0	I_{OUT} = 50μA	0.002	0.1	0.1	V
		4.5		0.001	0.1	0.1	
		5.5		0.001	0.1	0.1	
		3.0	$V_{IN} = V_{IL}$ or V_{IH}, I_{OL} = 12mA		0.36	0.44	
		4.5	$V_{IN} = V_{IL}$ or V_{IH}, I_{OL} = 24mA		0.36	0.44	
		5.5	$V_{IN} = V_{IL}$ or V_{IH}, I_{OL} = 24mA(1)		0.36	0.44	
I_{IN}(2)	Maximum Input Leakage Current	5.5	$V_I = V_{CC}$, GND		±0.1	±1.0	μA
I_{OZ}	Maximum 3-STATE Leakage Current	5.5	V_I (OE) = V_{IL}, V_{IH}; $V_I = V_{CC}$, GND; $V_O = V_{CC}$, GND		±0.25	±2.5	μA
I_{OLD}	Minimum Dynamic Output Current(3)	5.5	V_{OLD} = 1.65V Max.			75	mA
I_{OHD}		5.5	V_{OHD} = 3.85V Min.			-75	mA
I_{CC}(2)	Maximum Quiescent Supply Current	5.5	$V_{IN} = V_{CC}$ or GND		4.0	40.0	μA

Notes:

1. All outputs loaded; thresholds on input associated with output under test.
2. I_{IN} and I_{CC} @ 3.0V are guaranteed to be less than or equal to the respective limit @ 5.5V V_{CC}.
3. Maximum test duration 2.0ms, one output loaded at a time.

DC Electrical Characteristics for ACT

Symbol	Parameter	V_{CC} (V)	Conditions	$T_A = +25°C$ Typ.	$T_A = -40°C$ to $+85°C$ Guaranteed Limits		Units
V_{IH}	Minimum HIGH Level Input Voltage	4.5	$V_{OUT} = 0.1V$ or $V_{CC} - 0.1V$	1.5	2.0	2.0	V
		5.5		1.5	2.0	2.0	
V_{IL}	Maximum LOW Level Input Voltage	4.5	$V_{OUT} = 0.1V$ or $V_{CC} - 0.1V$	1.5	0.8	0.8	V
		5.5		1.5	0.8	0.8	
V_{OH}	Minimum HIGH Level Output Voltage	4.5	$I_{OUT} = -50\mu A$	4.49	4.4	4.4	V
		5.5		5.49	5.4	5.4	
		4.5	$V_{IN} = V_{IL}$ or V_{IH}, $I_{OH} = -24mA$		3.86	3.76	
		5.5	$V_{IN} = V_{IL}$ or V_{IH}, $I_{OH} = -24mA$(4)		4.86	4.76	
V_{OL}	Maximum LOW Level Output Voltage	4.5	$I_{OUT} = 50\mu A$	0.001	0.1	0.1	V
		5.5		0.001	0.1	0.1	
		4.5	$V_{IN} = V_{IL}$ or V_{IH}, $I_{OL} = 24mA$		0.36	0.44	
		5.5	$V_{IN} = V_{IL}$ or V_{IH}, $I_{OL} = 24mA$(4)		0.36	0.44	
I_{IN}	Maximum Input Leakage Current	5.5	$V_I = V_{CC}$, GND		±0.1	±1.0	μA
I_{OZ}	Maximum 3-STATE Leakage Current	5.5	$V_I = V_{IL}$, V_{IH}; $V_O = V_{CC}$, GND		±0.25	±2.5	μA
I_{CCT}	Maximum I_{CC}/Input	5.5	$V_I = V_{CC} - 2.1V$	0.6		1.5	mA
I_{OLD}	Minimum Dynamic Output Current(5)	5.5	$V_{OLD} = 1.65V$ Max.			75	mA
I_{OHD}		5.5	$V_{OHD} = 3.85V$ Min.			–75	mA
I_{CC}	Maximum Quiescent Supply Current	5.5	$V_{IN} = V_{CC}$ or GND		4.0	40.0	μA

Notes:

4. All outputs loaded; thresholds on input associated with output under test.
5. Maximum test duration 2.0ms, one output loaded at a time.

AC Electrical Characteristics for AC

Symbol	Parameter	V_{CC} (V)[6]	$T_A = +25°C$, $C_L = 50pF$			$T_A = -40°C$ to $+85°C$, $C_L = 50pF$		Units
			Min.	Typ.	Max.	Min.	Max.	
t_{PLH}	Propagation Delay Data to Output	3.3	1.5	6.0	8.0	1.0	9.0	ns
		5.0	1.5	4.5	6.5	1.0	7.0	
t_{PHL}	Propagation Delay Data to Output	3.3	1.5	5.5	8.0	1.0	8.5	ns
		5.0	1.5	4.5	6.0	1.0	6.5	
t_{PZH}	Output Enable Time	3.3	1.5	6.0	10.5	1.0	11.0	ns
		5.0	1.5	5.0	7.0	1.0	8.0	
t_{PZL}	Output Enable Time	3.3	1.5	7.0	10.0	1.0	11.0	ns
		5.0	1.5	5.5	8.0	1.0	8.5	
t_{PHZ}	Output Disable Time	3.3	1.5	7.0	10.0	1.0	10.5	ns
		5.0	1.5	6.5	9.0	1.0	9.5	
t_{PLZ}	Output Disable Time	3.3	1.5	7.5	10.5	1.0	11.5	ns
		5.0	1.5	6.5	9.0	1.0	9.5	

Note:

6. Voltage range 3.3 is 3.3V ± 0.3V. Voltage range 5.0 is 5.0V ± 0.5V.

AC Electrical Characteristics for ACT

Symbol	Parameter	V_{CC} (V)[7]	$T_A = +25°C$, $C_L = 50pF$			$T_A = -40°C$ to $+85°C$, $C_L = 50pF$		Units
			Min.	Typ.	Max.	Min.	Max.	
t_{PLH}	Propagation Delay, Data to Output	5.0	1.5	6.0	8.5	1.5	9.5	ns
t_{PHL}	Propagation Delay, Data to Output	5.0	1.5	5.5	7.5	1.5	8.5	ns
t_{PZH}	Output Enable Time	5.0	1.5	7.0	8.5	1.0	9.5	ns
t_{PZL}	Output Enable Time	5.0	2.0	7.0	9.5	1.5	10.5	ns
t_{PHZ}	Output Disable Time	5.0	2.0	8.0	9.5	2.0	10.5	ns
t_{PLZ}	Output Disable Time	5.0	2.5	6.5	10.0	2.0	10.5	ns

Note:

7. Voltage range 5.0 is 5.0V ± 0.5V.

Capacitance

Symbol	Parameter	Conditions	Typ.	Units
C_{IN}	Input Capacitance	V_{CC} = OPEN	4.5	pF
C_{PD}	Power Dissipation Capacitance	V_{CC} = 5.0V	45.0	pF

Physical Dimensions

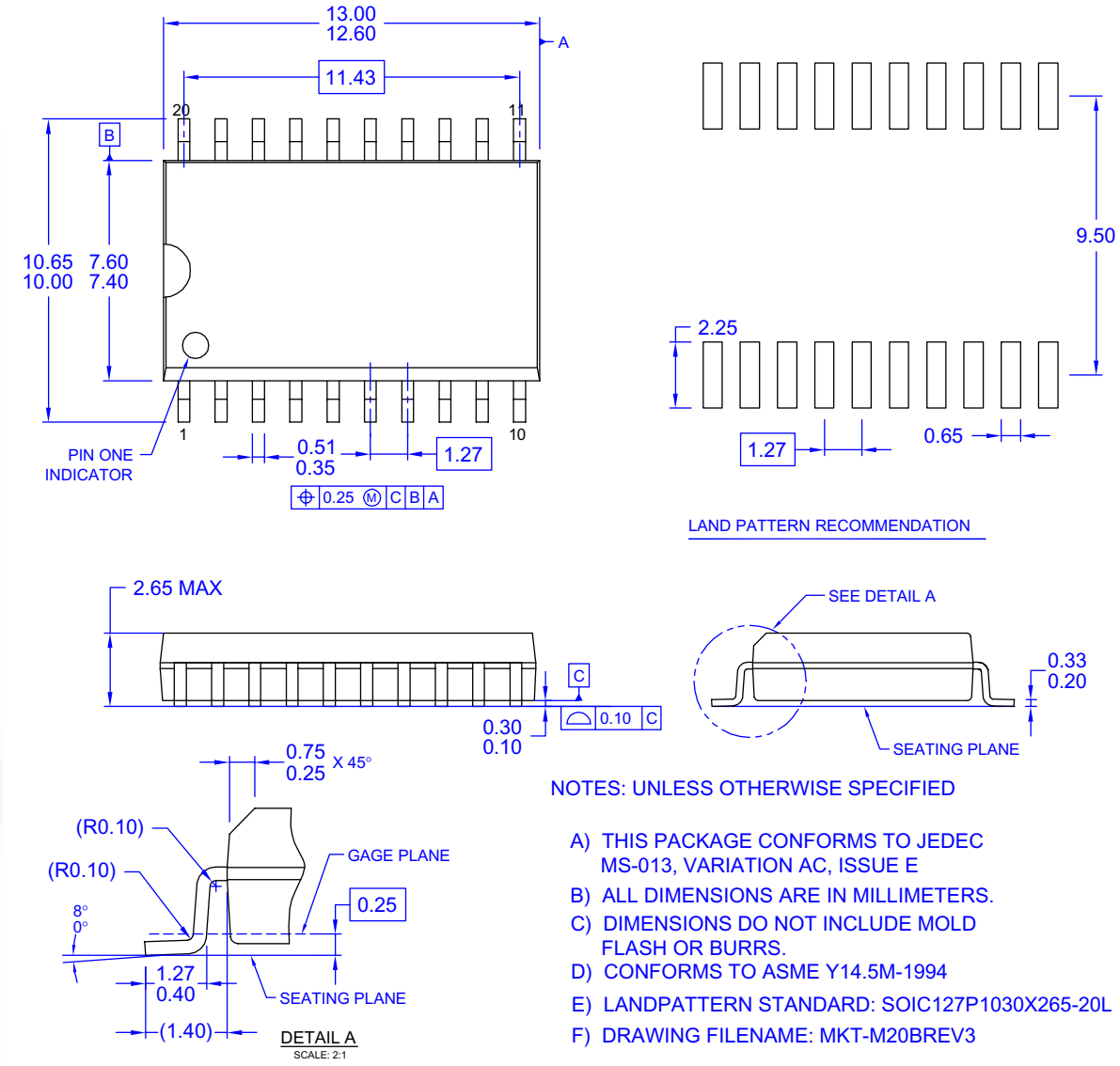

Figure 1. 20-Lead Small Outline Integrated Circuit (SOIC), JEDEC MS-013, 0.300" Wide

Package drawings are provided as a service to customers considering Fairchild components. Drawings may change in any manner without notice. Please note the revision and/or date on the drawing and contact a Fairchild Semiconductor representative to verify or obtain the most recent revision. Package specifications do not expand the terms of Fairchild's worldwide terms and conditions, specifically the warranty therein, which covers Fairchild products.

Always visit Fairchild Semiconductor's online packaging area for the most recent package drawings:

http://www.fairchildsemi.com/packaging/

Physical Dimensions (Continued)

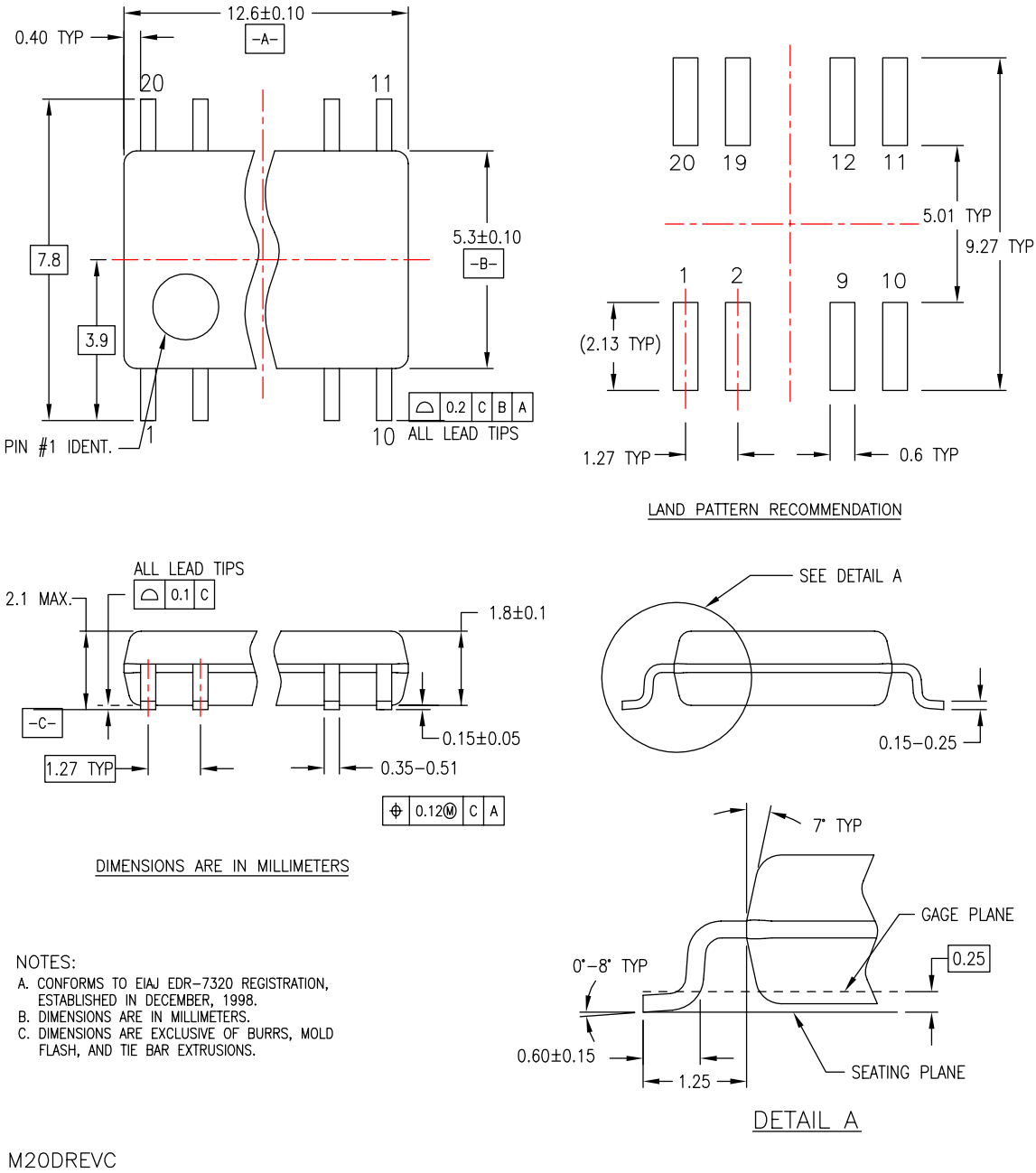

NOTES:
A. CONFORMS TO EIAJ EDR-7320 REGISTRATION, ESTABLISHED IN DECEMBER, 1998.
B. DIMENSIONS ARE IN MILLIMETERS.
C. DIMENSIONS ARE EXCLUSIVE OF BURRS, MOLD FLASH, AND TIE BAR EXTRUSIONS.

Figure 2. 20-Lead Small Outline Package (SOP), EIAJ TYPE II, 5.3mm Wide

Package drawings are provided as a service to customers considering Fairchild components. Drawings may change in any manner without notice. Please note the revision and/or date on the drawing and contact a Fairchild Semiconductor representative to verify or obtain the most recent revision. Package specifications do not expand the terms of Fairchild's worldwide terms and conditions, specifically the warranty therein, which covers Fairchild products.

Always visit Fairchild Semiconductor's online packaging area for the most recent package drawings:

http://www.fairchildsemi.com/packaging/

Physical Dimensions (Continued)

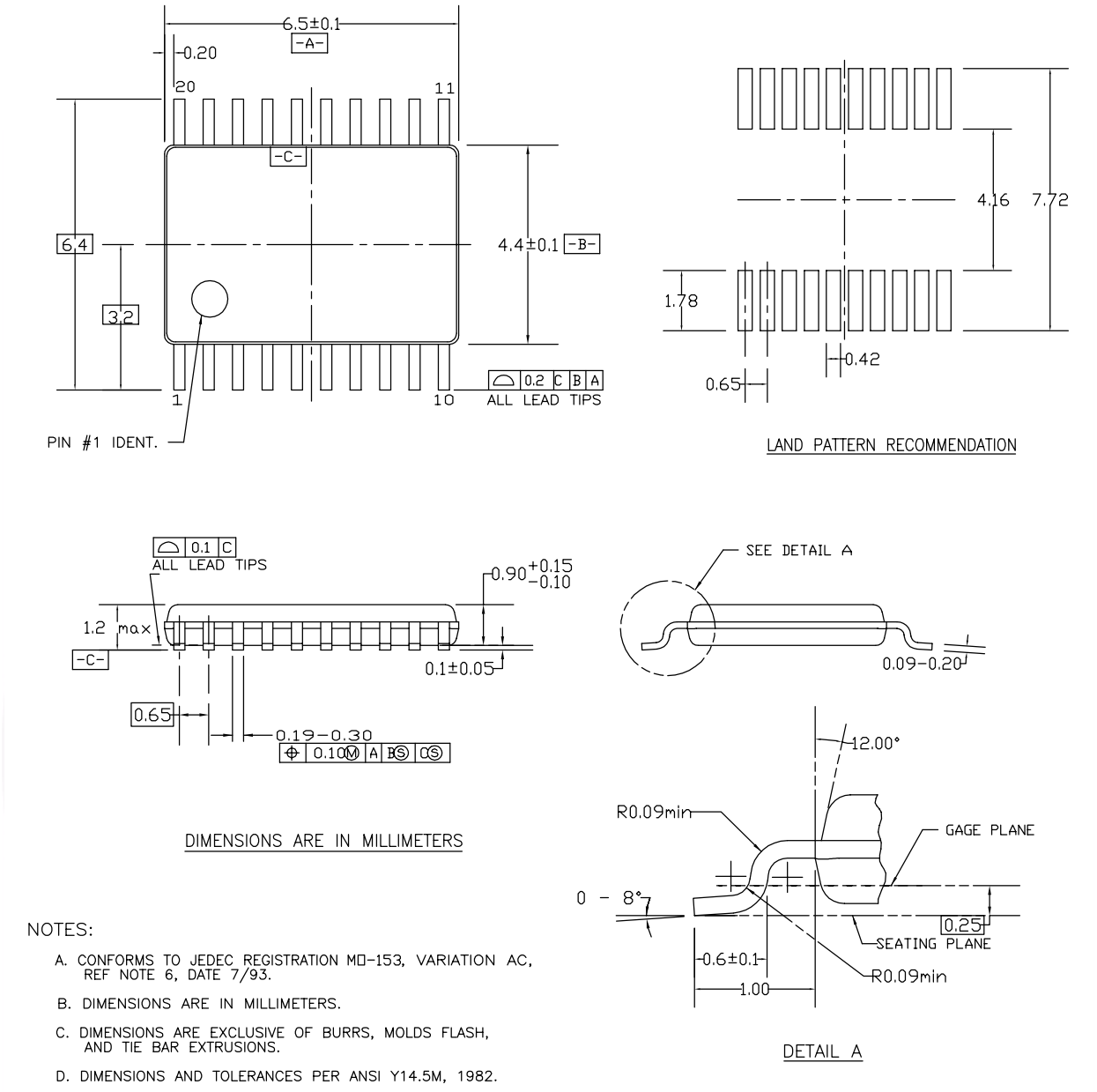

NOTES:

A. CONFORMS TO JEDEC REGISTRATION MO-153, VARIATION AC, REF NOTE 6, DATE 7/93.

B. DIMENSIONS ARE IN MILLIMETERS.

C. DIMENSIONS ARE EXCLUSIVE OF BURRS, MOLDS FLASH, AND TIE BAR EXTRUSIONS.

D. DIMENSIONS AND TOLERANCES PER ANSI Y14.5M, 1982.

MTC20REVD1

Figure 3. 20-Lead Thin Shrink Small Outline Package (TSSOP), JEDEC MO-153, 4.4mm Wide

Package drawings are provided as a service to customers considering Fairchild components. Drawings may change in any manner without notice. Please note the revision and/or date on the drawing and contact a Fairchild Semiconductor representative to verify or obtain the most recent revision. Package specifications do not expand the terms of Fairchild's worldwide terms and conditions, specifically the warranty therein, which covers Fairchild products.

Always visit Fairchild Semiconductor's online packaging area for the most recent package drawings:

http://www.fairchildsemi.com/packaging/

Physical Dimensions (Continued)

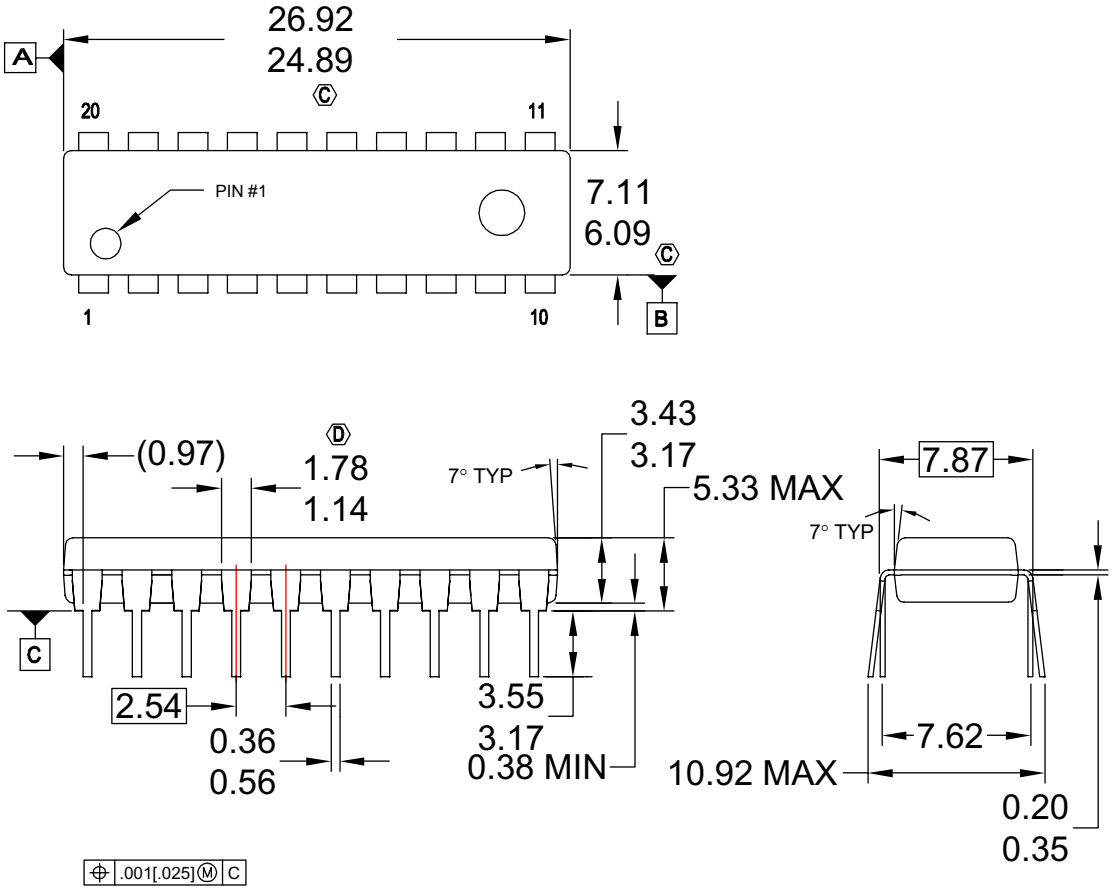

NOTES:

A. CONFORMS TO JEDEC REGISTRATION MS-001, VARIATIONS AD.

B. ALL DIMENSIONS ARE IN MILLIMETERS

C. DOES NOT INCLUDE MOLD FLASH OR PROTRUSIONS. MOLD FLASH OR PROTRUSIONS SHALL NOT EXCEED 0.25MM.

D. DOES NOT INCLUDE DAMBAR PROTRUSIONS. DAMBAR PROTRUSIONS SHALL NOT EXCEED 0.25MM.

E. DIMENSIONING AND TOLERANCING PER ASME Y14.5M-1994.

F. DRAWING FILE NAME: N20AREV8

Figure 4. 20-Lead Plastic Dual-In-Line Package (PDIP), JEDEC MS-001, 0.300" Wide

Package drawings are provided as a service to customers considering Fairchild components. Drawings may change in any manner without notice. Please note the revision and/or date on the drawing and contact a Fairchild Semiconductor representative to verify or obtain the most recent revision. Package specifications do not expand the terms of Fairchild's worldwide terms and conditions, specifically the warranty therein, which covers Fairchild products.

Always visit Fairchild Semiconductor's online packaging area for the most recent package drawings:

http://www.fairchildsemi.com/packaging/

FAIRCHILD SEMICONDUCTOR®

TRADEMARKS

The following includes registered and unregistered trademarks and service marks, owned by Fairchild Semiconductor and/or its global subsidiaries, and is not intended to be an exhaustive list of all such trademarks.

ACEx®
Build it Now™
CorePLUS™
CROSSVOLT™
CTL™
Current Transfer Logic™
EcoSPARK®
EZSWITCH™ *
E2™
F®
Fairchild®
Fairchild Semiconductor®
FACT Quiet Series™
FACT®
FAST®
FastvCore™
FlashWriter® *
FPS™
FRFET®
Global Power Resource℠
Green FPS™
Green FPS™ e-Series™
GTO™
i-Lo™
IntelliMAX™
ISOPLANAR™
MegaBuck™
MICROCOUPLER™
MicroFET™
MicroPak™
MillerDrive™
Motion-SPM™
OPTOLOGIC®
OPTOPLANAR®
PDP-SPM™
Power220®
Power247®
POWEREDGE®
Power-SPM™
PowerTrench®
Programmable Active Droop™
QFET®
QS™
QT Optoelectronics™
Quiet Series™
RapidConfigure™
SMART START™
SPM®
STEALTH™
SuperFET™
SuperSOT™-3
SuperSOT™-6
SuperSOT™-8
SyncFET™
SYSTEM GENERAL®
The Power Franchise®
the power franchise
TinyBoost™
TinyBuck™
TinyLogic®
TINYOPTO™
TinyPower™
TinyPWM™
TinyWire™
µSerDes™
UHC®
Ultra FRFET™
UniFET™
VCX™

* EZSWITCH™ and FlashWriter® are trademarks of System General Corporation, used under license by Fairchild Semiconductor.

DISCLAIMER

FAIRCHILD SEMICONDUCTOR RESERVES THE RIGHT TO MAKE CHANGES WITHOUT FURTHER NOTICE TO ANY PRODUCTS HEREIN TO IMPROVE RELIABILITY, FUNCTION, OR DESIGN. FAIRCHILD DOES NOT ASSUME ANY LIABILITY ARISING OUT OF THE APPLICATION OR USE OF ANY PRODUCT OR CIRCUIT DESCRIBED HEREIN; NEITHER DOES IT CONVEY ANY LICENSE UNDER ITS PATENT RIGHTS, NOR THE RIGHTS OF OTHERS. THESE SPECIFICATIONS DO NOT EXPAND THE TERMS OF FAIRCHILD'S WORLDWIDE TERMS AND CONDITIONS, SPECIFICALLY THE WARRANTY THEREIN, WHICH COVERS THESE PRODUCTS.

LIFE SUPPORT POLICY

FAIRCHILD'S PRODUCTS ARE NOT AUTHORIZED FOR USE AS CRITICAL COMPONENTS IN LIFE SUPPORT DEVICES OR SYSTEMS WITHOUT THE EXPRESS WRITTEN APPROVAL OF FAIRCHILD SEMICONDUCTOR CORPORATION.

As used herein:

1. Life support devices or systems are devices or systems which, (a) are intended for surgical implant into the body or (b) support or sustain life, and (c) whose failure to perform when properly used in accordance with instructions for use provided in the labeling, can be reasonably expected to result in a significant injury of the user.
2. A critical component in any component of a life support, device, or system whose failure to perform can be reasonably expected to cause the failure of the life support device or system, or to affect its safety or effectiveness.

PRODUCT STATUS DEFINITIONS

Definition of Terms

Datasheet Identification	Product Status	Definition
Advance Information	Formative or In Design	This datasheet contains the design specifications for product development. Specifications may change in any manner without notice.
Preliminary	First Production	This datasheet contains preliminary data; supplementary data will be published at a later date. Fairchild Semiconductor reserves the right to make changes at any time without notice to improve design.
No Identification Needed	Full Production	This datasheet contains final specifications. Fairchild Semiconductor reserves the right to make changes at any time without notice to improve the design.
Obsolete	Not In Production	This datasheet contains specifications on a product that has been discontinued by Fairchild Semiconductor. The datasheet is printed for reference information only.

Rev. I32

О компании

ООО "ТрейдЭлектроникс" - это оперативные поставки широкого спектра электронных компонентов отечественного и импортного производства напрямую от производителей и с крупнейших мировых складов. Реализуемая нашей компанией продукция насчитывает более полумиллиона наименований.

Благодаря этому наша компания предлагает к поставке практически не ограниченный ассортимент компонентов как оптовыми, мелкооптовыми партиями, так и в розницу.

Наличие собственной эффективной системы логистики обеспечивает надежную поставку продукции по конкурентным ценам в точно указанные сроки.

Срок поставки со стоков в **Европе и Америке – от 3 до 14 дней.**

Срок поставки из **Азии – от 10 дней.**

Благодаря развитой сети поставщиков, помогаем в поиске и приобретении экзотичных или снятых с производства компонентов.

Предоставляем спец цены на элементы для создания инженерных сэмплов.

Упорный труд, качественный результат дают нам право быть уверенными в себе и надежными для наших клиентов.

Наша компания это:

- Гарантия качества поставляемой продукции
- Широкий ассортимент
- Минимальные сроки поставок
- Техническая поддержка
- Подбор комплектации
- Индивидуальный подход
- Гибкое ценообразование

Наша организация особенно сильна в поставках модулей, микросхем, пассивных компонентов, ксайленсах (XC), EPF, EPM и силовой электроники.

Большой выбор предлагаемой продукции, различные виды оплаты и доставки, позволят Вам сэкономить время и получить максимум выгоды от сотрудничества с нами!

Trade Electronics.ru

гарантия бесперебойности производства и качества выпускаемой продукции

Перечень производителей, продукцию которых мы поставляем на российский рынок

AMD
ANALOG DEVICES
BOURNS
Coilcraft
élantec Semiconductor, Inc.
HARRIS
Infineon
JRC
MICREL
MOTOROLA
nichicon
PHILIPS
ROHM
SGS-THOMSON
Sipex
TAIYO YUDEN
TOKO
ZILOG
Winbond
Allegro
ATMEL
BURR - BROWN
EXAR
HITACHI
intel
Lattice
muRata
OKI
QUALCOMM
SAMSUNG
SHARP
SONY
TDK
TOSHIBA
KYOCERA
ALTERA
AVX
CITILYST
CYPRESS
FAIRCHILD SEMICONDUCTOR
HOLTEK
International IOR Rectifier
LINEAR TECHNOLOGY
MITSUBISHI
National Semiconductor
ON Semiconductor
REALTEK
SANYO
SHINDENGEN
SGS
TECCOR
TUNDRA
XILINX
Amphenol
Bay Linear
CIRRUS LOGIC
DALLAS
FUJITSU
IDT
intersil
MAXIM
molex
NEC
Panasonic
RENESAS
SII
SIEMENS
ST
Texas Instruments
VISHAY
ZETEX SEMICONDUCTORS

Trade Electronics.ru

гарантия бесперебойности производства и качества выпускаемой продукции

С удовольствием будем прорабатывать для Вас поставки всех необходимых компонентов по текущим запросам для скорейшего выявления групп элементов, по которым сотрудничество именно с нашей компанией будет для Вас максимально выгодным!

С уважением,

Менеджер отдела продаж ООО

«Трейд Электроникс»

Шишлаков Евгений

8 (495)668-30-28 доб 169

manager28@tradeelectronics.ru

http://www.tradeelectronics.ru/