CY7C09269V/79V/89V
CY7C09369V/79V/89V

3.3V 16K/32K/64K x 16/18 Synchronous Dual-Port Static RAM

Features

- True Dual-Ported memory cells which allow simultaneous access of the same memory location
- 6 Flow-Through/Pipelined devices
  - 16K x 16/18 organization (CY7C09269V/369V)
  - 32K x 16/18 organization (CY7C09279V/379V)
  - 64K x 16/18 organization (CY7C09289V/389V)
- 3 Modes
  - Flow-Through
  - Pipelined
  - Burst
- Pipelined output mode on both ports allows fast 100-MHz operation
- 0.35-micron CMOS for optimum speed/power
- High-speed clock to data access 6.5[1, 2]/7.5[2]/9/12 ns (max.)
- 3.3V low operating power
  - Active = 115 mA (typical)
  - Standby = 10 μA (typical)
- Fully synchronous interface for easier operation
- Burst counters increment addresses internally
  - Shorten cycle times
  - Minimize bus noise
  - Supported in Flow-Through and Pipelined modes
- Dual Chip Enables for easy depth expansion
- Upper and Lower Byte Controls for Bus Matching
- Automatic power-down
- Commercial and Industrial temperature ranges
- Pb-Free 100-pin TQFP Package Available

Logic Block Diagram

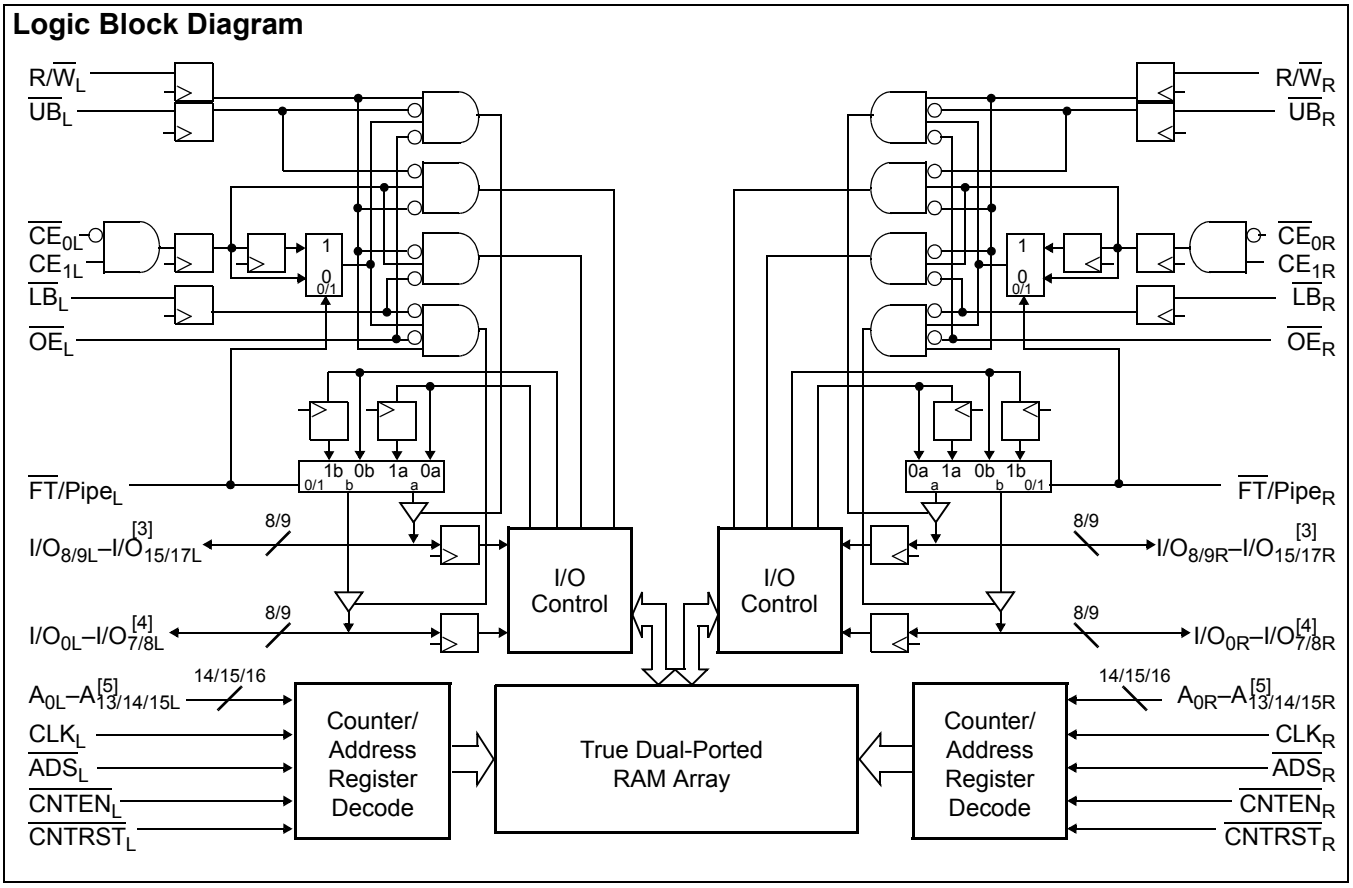

Notes:
1. Call for availability.
2. See page 6 for Load Conditions.
3. I/O_8–I/O_{15} for x16 devices; I/O_9–I/O_{17} for x18 devices.
4. I/O_0–I/O_7 for x16 devices. I/O_0–I/O_8 for x18 devices.
5. A_0–A_{13} for 16K; A_0–A_{14} for 32K; A_0–A_{15} for 64K devices.

Functional Description

The CY7C09269V/79V/89V and CY7C09369V/79V/89V are high-speed 3.3V synchronous CMOS 16K, 32K, and 64K x 16/18 dual-port static RAMs. Two ports are provided, permitting independent, simultaneous access for reads and writes to any location in memory.[6] Registers on control, address, and data lines allow for minimal set-up and hold times. In pipelined output mode, data is registered for decreased cycle time. Clock to data valid t_{CD2} = 6.5 ns[1, 2] (pipelined). Flow-through mode can also be used to bypass the pipelined output register to eliminate access latency. In flow-through mode data will be available t_{CD1} = 18 ns after the address is clocked into the device. Pipelined output or flow-through mode is selected via the $\overline{FT}$/Pipe pin.

Each port contains a burst counter on the input address register. The internal write pulse width is independent of the LOW to HIGH transition of the clock signal. The internal write pulse is self-timed to allow the shortest possible cycle times.

A HIGH on $\overline{CE}_0$ or LOW on CE_1 for one clock cycle will power down the internal circuitry to reduce the static power consumption. The use of multiple Chip Enables allows easier banking of multiple chips for depth expansion configurations. In the pipelined mode, one cycle is required with $\overline{CE}_0$ LOW and CE_1 HIGH to reactivate the outputs.

Counter enable inputs are provided to stall the operation of the address input and utilize the internal address generated by the internal counter for fast interleaved memory applications. A port's burst counter is loaded with the port's Address Strobe (ADS). When the port's Count Enable (CNTEN) is asserted, the address counter will increment on each LOW to HIGH transition of that port's clock signal. This will read/write one word from/into each successive address location until CNTEN is deasserted. The counter can address the entire memory array and will loop back to the start. Counter Reset (CNTRST) is used to reset the burst counter.

All parts are available in 100-pin Thin Quad Plastic Flatpack (TQFP) packages.

Pin Configurations

100-Pin TQFP (Top View)

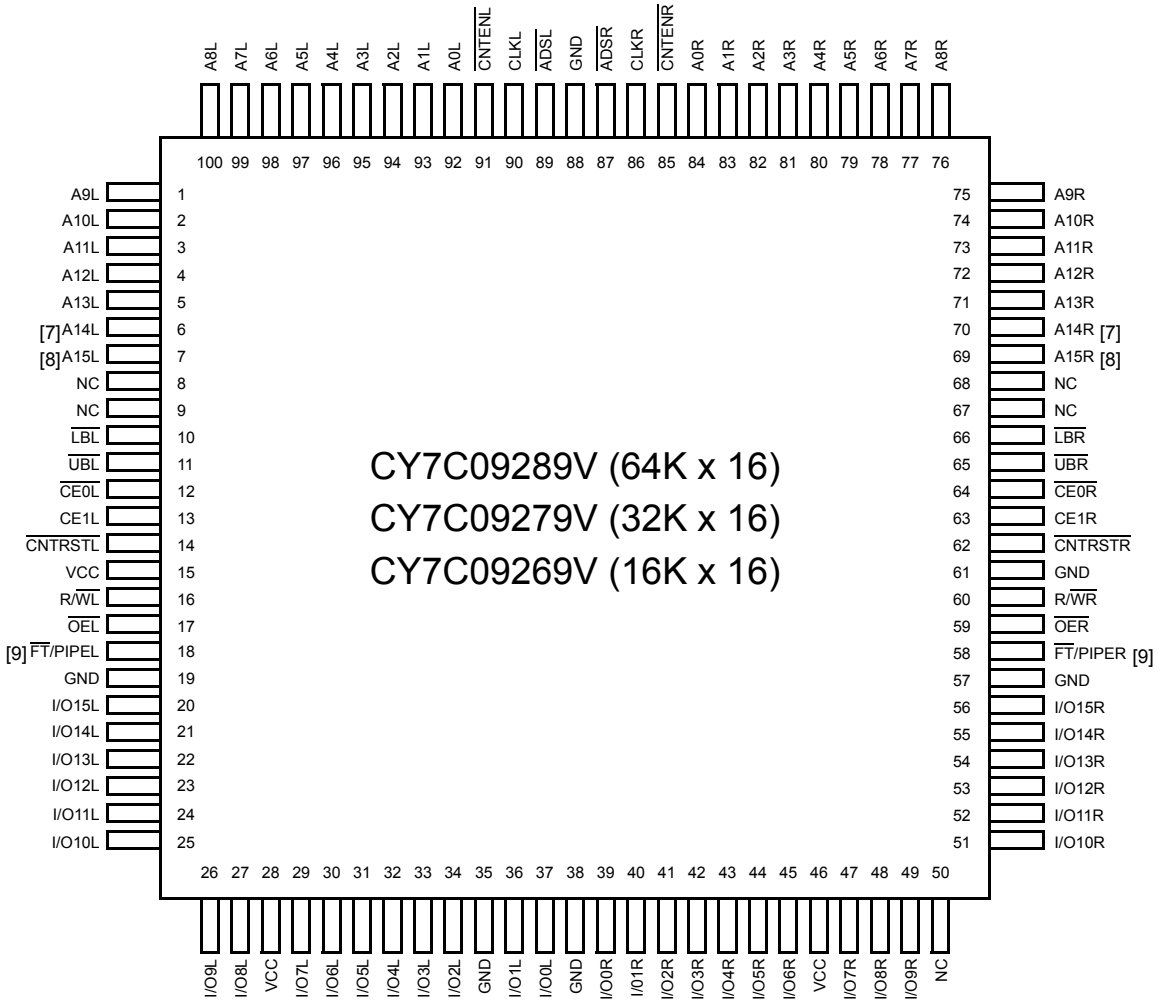

Notes:
6. When writing simultaneously to the same location, the final value cannot be guaranteed.
7. This pin is NC for CY7C09269V.
8. This pin is NC for CY7C09269V and CY7C09279V.
9. For CY7C09269V and CY7C09279V, pin #18 connected to V_{CC} is pin compatible to an IDT 5V x16 pipelined device; connecting pin #18 and #58 to GND is pin compatible to an IDT 5V x16 flow-through device.

Pin Configurations (continued)

100-Pin TQFP (Top View)

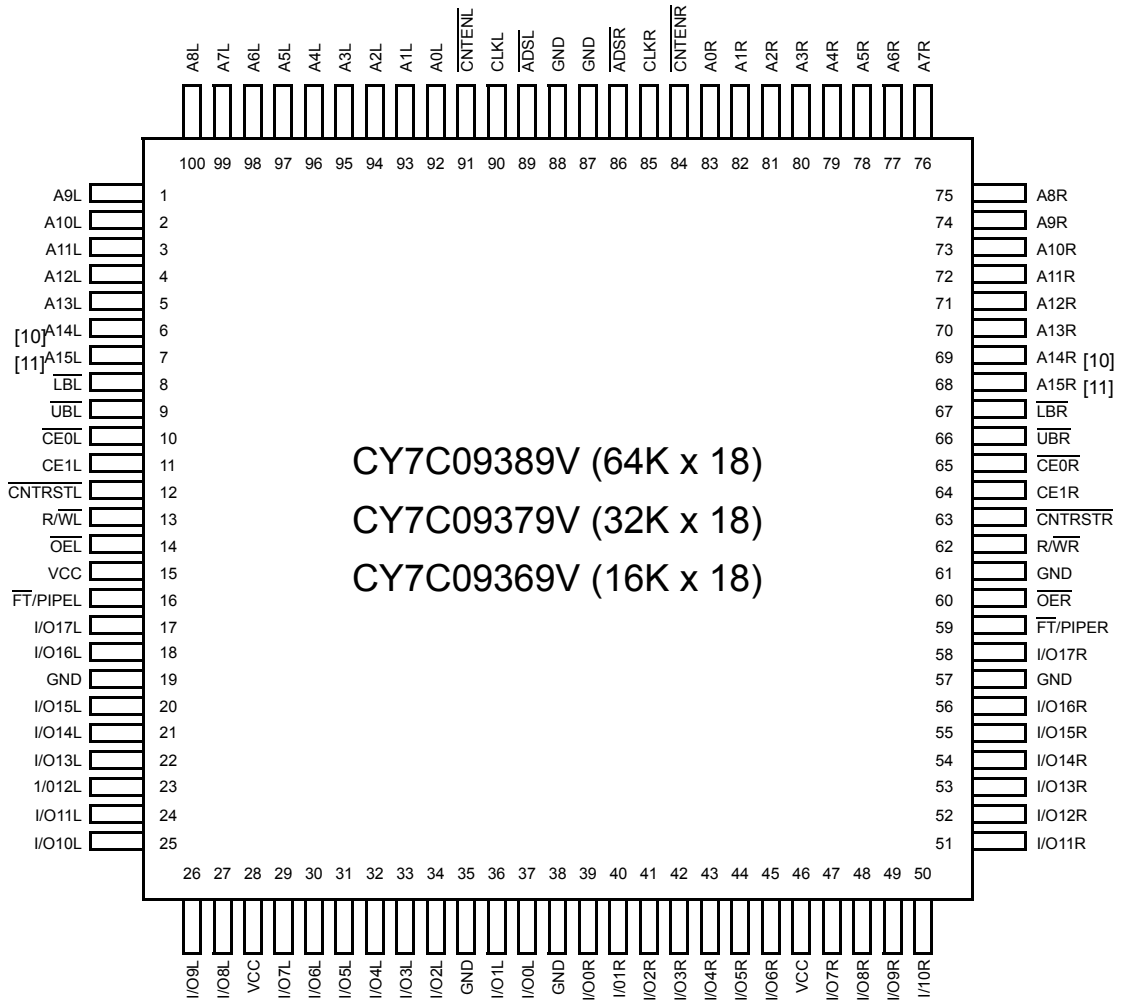

Selection Guide

	CY7C09269V/79V/89V CY7C09369V/79V/89V -6[1, 2]	CY7C09269V/79V/89V CY7C09369V/79V/89V -7[2]	CY7C09269V/79V/89V CY7C09369V/79V/89V -9	CY7C09269V/79V/89V CY7C09369V/79V/89V -12
f_{MAX2} (MHz) (Pipelined)	100	83	67	50
Max. Access Time (ns) (Clock to Data, Pipelined)	6.5	7.5	9	12
Typical Operating Current I_{CC} (mA)	175	155	135	115
Typical Standby Current for I_{SB1} (mA) (Both Ports TTL Level)	25	25	20	20
Typical Standby Current for I_{SB3} (μA) (Both Ports CMOS Level)	10 μA	10 μA	10 μA	10 μA

Notes:
10. This pin is NC for CY7C09369V.
11. This pin is NC for CY7C09369V and CY7C09379V.

Pin Definitions

Left Port	Right Port	Description
A_{0L}–A_{15L}	A_{0R}–A_{15R}	Address Inputs (A_0–A_{14} for 32K, A_0–A_{13} for 16K devices).
$\overline{ADS}_L$	$\overline{ADS}_R$	Address Strobe Input. Used as an address qualifier. This signal should be asserted LOW to access the part using an externally supplied address. Asserting this signal LOW also loads the burst counter with the address present on the address pins.
$\overline{CE}_{0L}$,CE_{1L}	$\overline{CE}_{0R}$,CE_{1R}	Chip Enable Input. To select either the left or right port, both $\overline{CE}_0$ AND CE_1 must be asserted to their active states ($\overline{CE}_0 \le V_{IL}$ and $CE_1 \ge V_{IH}$).
CLK_L	CLK_R	Clock Signal. This input can be free running or strobed. Maximum clock input rate is f_{MAX}.
$\overline{CNTEN}_L$	$\overline{CNTEN}_R$	Counter Enable Input. Asserting this signal LOW increments the burst address counter of its respective port on each rising edge of CLK. $\overline{CNTEN}$ is disabled if $\overline{ADS}$ or $\overline{CNTRST}$ are asserted LOW.
$\overline{CNTRST}_L$	$\overline{CNTRST}_R$	Counter Reset Input. Asserting this signal LOW resets the burst address counter of its respective port to zero. $\overline{CNTRST}$ is not disabled by asserting $\overline{ADS}$ or $\overline{CNTEN}$.
I/O_{0L}–I/O_{17L}	I/O_{0R}–I/O_{17R}	Data Bus Input/Output (I/O_0–I/O_{15} for x16 devices).
$\overline{LB}_L$	$\overline{LB}_R$	Lower Byte Select Input. Asserting this signal LOW enables read and write operations to the lower byte. (I/O_0–I/O_8 for x18, I/O_0–I/O_7 for x16) of the memory array. For read operations both the $\overline{LB}$ and $\overline{OE}$ signals must be asserted to drive output data on the lower byte of the data pins.
$\overline{UB}_L$	$\overline{UB}_R$	Upper Byte Select Input. Same function as $\overline{LB}$, but to the upper byte ($I/O_{8/9L}$–$I/O_{15/17L}$).
$\overline{OE}_L$	$\overline{OE}_R$	Output Enable Input. This signal must be asserted LOW to enable the I/O data pins during read operations.
$R/\overline{W}_L$	$R/\overline{W}_R$	Read/Write Enable Input. This signal is asserted LOW to write to the dual port memory array. For read operations, assert this pin HIGH.
$\overline{FT}/PIPE_L$	$\overline{FT}/PIPE_R$	Flow-Through/Pipelined Select Input. For flow-through mode operation, assert this pin LOW. For pipelined mode operation, assert this pin HIGH.
GND		Ground Input.
NC		No Connect.
V_{CC}		Power Input.

Maximum Ratings[12]

(Above which the useful life may be impaired. For user guidelines, not tested.)

Storage Temperature ..... –65°C to +150°C

Ambient Temperature with Power Applied.....–55°C to +125°C

Supply Voltage to Ground Potential ..... –0.5V to +4.6V

DC Voltage Applied to Outputs in High Z State.....–0.5V to V_{CC}+0.5V

DC Input Voltage.....–0.5V to V_{CC}+0.5V

Output Current into Outputs (LOW)..... 20 mA

Static Discharge Voltage..... >1100V

Latch-Up Current..... >200mA

Operating Range

Range	Ambient Temperature	V_{CC}
Commercial	0°C to +70°C	3.3V ± 300 mV
Industrial	–40°C to +85°C	3.3V ± 300 mV

Note:
12. The voltage on any input or I/O pin can not exceed the power pin during power-up.

Electrical Characteristics Over the Operating Range

Parameter	Description		CY7C09269V/79V/89V CY7C09369V/79V/89V												Unit
			-6[1, 2]			-7[2]			-9			-12			
			Min.	Typ.	Max.	Min.	Typ.	Max.	Min.	Typ.	Max.	Min.	Typ.	Max.	
V_{OH}	Output HIGH Voltage (V_{CC} = Min. I_{OH} = –4.0 mA)		2.4			2.4			2.4			2.4			V
V_{OL}	Output LOW Voltage (V_{CC} = Min. I_{OH} = +4.0 mA)				0.4			0.4			0.4			0.4	V
V_{IH}	Input HIGH Voltage		2.0			2.0			2.0			2.0			V
V_{IL}	Input LOW Voltage				0.8			0.8			0.8			0.8	V
I_{OZ}	Output Leakage Current		–10		10	–10		10	–10		10	–10		10	µA
I_{CC}	Operating Current (V_{CC} = Max, I_{OUT} = 0 mA) Outputs Disabled	Com'l.		175	320		155	275		135	230		115	180	mA
		Indust.					275	390		185	300				mA
I_{SB1}	Standby Current (Both Ports TTL Level)[13] $\overline{CE}_L$ & $\overline{CE}_R \geq V_{IH}$, f = f_{MAX}	Com'l.		25	95		25	85		20	75		20	70	mA
		Indust.					85	120		35	85				mA
I_{SB2}	Standby Current (One Port TTL Level)[13] $\overline{CE}_L$ | $\overline{CE}_R \geq V_{IH}$, f = f_{MAX}	Com'l.		115	175		105	165		95	155		85	140	mA
		Indust.					165	210		105	165				mA
I_{SB3}	Standby Current (Both Ports CMOS Level)[13] $\overline{CE}_L$ & $\overline{CE}_R \geq V_{CC}$ – 0.2V, f = 0	Com'l.		10	250		10	250		10	250		10	250	µA
		Indust.					10	250		10	250				µA
I_{SB4}	Standby Current (One Port CMOS Level)[13] $\overline{CE}_L$ | $\overline{CE}_R \geq V_{IH}$, f = f_{MAX}	Com'l.		105	135		95	125		85	115		75	100	mA
		Indust.					125	170		95	125				mA

Capacitance

Parameter	Description	Test Conditions	Max.	Unit
C_{IN}	Input Capacitance	T_A = 25°C, f = 1 MHz, V_{CC} = 3.3V	10	pF
C_{OUT}	Output Capacitance		10	pF

Note:
13. $\overline{CE}_L$ and $\overline{CE}_R$ are internal signals. To select either the left or right port, both $\overline{CE}_0$ and CE_1 must be asserted to their active states ($\overline{CE}_0 \leq V_{IL}$ and $CE_1 \geq V_{IH}$).

AC Test Loads

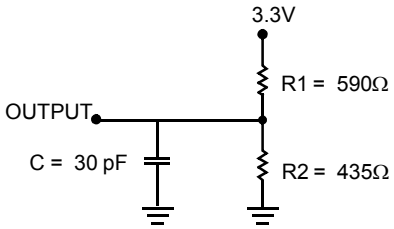

(a) Normal Load (Load 1)

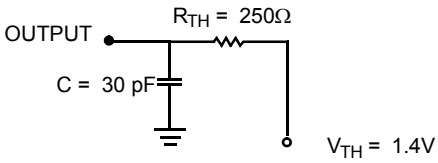

(b) Thévenin Equivalent (Load 1)

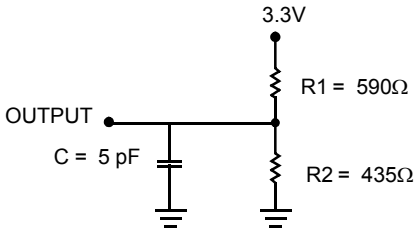

(c) Three-State Delay (Load 2)
(Used for t_{CKLZ}, t_{OLZ}, & t_{OHZ} including scope and jig)

AC Test Loads (Applicable to -6 and -7 only)[14]

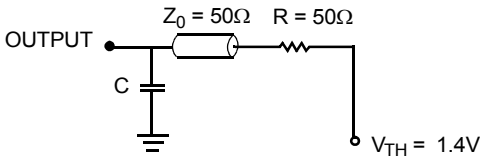

(a) Load 1 (-6 and -7 only)

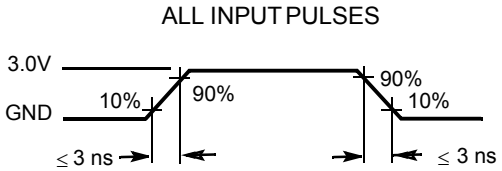

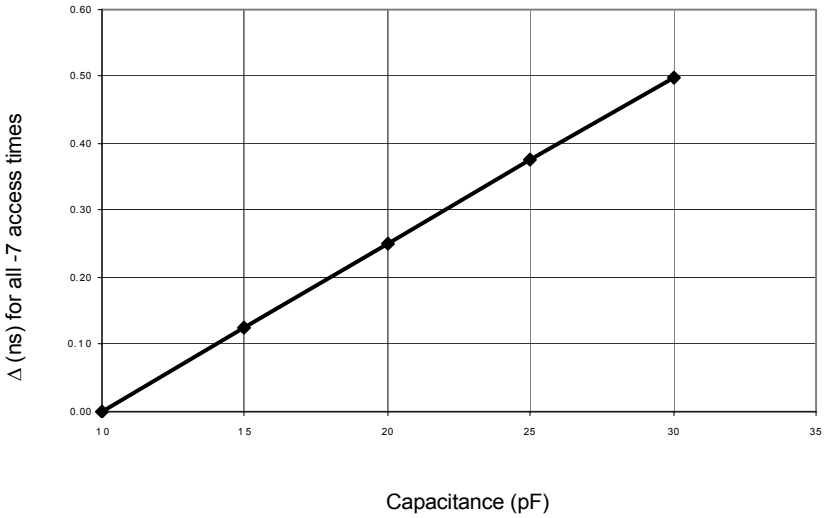

(b) Load Derating Curve

Note:
14. Test Conditions: C = 10 pF.

Switching Characteristics Over the Operating Range

Parameter	Description	CY7C09269V/79V/89V CY7C09369V/79V/89V								Unit
		-6[1, 2]		-7[2]		-9		-12		
		Min.	Max.	Min.	Max.	Min.	Max.	Min.	Max.	
f_{MAX1}	f_{Max} Flow-Through		53		45		40		33	MHz
f_{MAX2}	f_{Max} Pipelined		100		83		67		50	MHz
t_{CYC1}	Clock Cycle Time - Flow-Through	19		22		25		30		ns
t_{CYC2}	Clock Cycle Time - Pipelined	10		12		15		20		ns
t_{CH1}	Clock HIGH Time - Flow-Through	6.5		7.5		12		12		ns
t_{CL1}	Clock LOW Time - Flow-Through	6.5		7.5		12		12		ns
t_{CH2}	Clock HIGH Time - Pipelined	4		5		6		8		ns
t_{CL2}	Clock LOW Time - Pipelined	4		5		6		8		ns
t_R	Clock Rise Time		3		3		3		3	ns
t_F	Clock Fall Time		3		3		3		3	ns
t_{SA}	Address Set-Up Time	3.5		4		4		4		ns
t_{HA}	Address Hold Time	0		0		1		1		ns
t_{SC}	Chip Enable Set-Up Time	3.5		4		4		4		ns
t_{HC}	Chip Enable Hold Time	0		0		1		1		ns
t_{SW}	R/$\overline{W}$ Set-Up Time	3.5		4		4		4		ns
t_{HW}	R/$\overline{W}$ Hold Time	0		0		1		1		ns
t_{SD}	Input Data Set-Up Time	3.5		4		4		4		ns
t_{HD}	Input Data Hold Time	0		0		1		1		ns
t_{SAD}	$\overline{ADS}$ Set-Up Time	3.5		4		4		4		ns
t_{HAD}	$\overline{ADS}$ Hold Time	0		0		1		1		ns
t_{SCN}	$\overline{CNTEN}$ Set-Up Time	3.5		4.5		5		5		ns
t_{HCN}	$\overline{CNTEN}$ Hold Time	0		0		1		1		ns
t_{SRST}	$\overline{CNTRST}$ Set-Up Time	3.5		4		4		4		ns
t_{HRST}	$\overline{CNTRST}$ Hold Time	0		0		1		1		ns
t_{OE}	Output Enable to Data Valid		8		9		10		12	ns
t_{OLZ}[15,16]	$\overline{OE}$ to Low Z	2		2		2		2		ns
t_{OHZ}[15,16]	$\overline{OE}$ to High Z	1	7	1	7	1	7	1	7	ns
t_{CD1}	Clock to Data Valid - Flow-Through		15		18		20		25	ns
t_{CD2}	Clock to Data Valid - Pipelined		6.5		7.5		9		12	ns
t_{DC}	Data Output Hold After Clock HIGH	2		2		2		2		ns
t_{CKZ}[15,16]	Clock HIGH to Output High Z	2	9	2	9	2	9	2	9	ns
t_{CKZ}[15,16]	Clock HIGH to Output Low Z	2		2		2		2		ns
Port to Port Delays										
t_{CWDD}	Write Port Clock HIGH to Read Data Delay		30		35		40		40	ns
t_{CCS}	Clock to Clock Set-Up Time		9		10		15		15	ns

Notes:
15. Test conditions used are Load 2.
16. This parameter is guaranteed by design, but it is not production tested.

Switching Waveforms

Read Cycle for Flow-Through Output ($\overline{FT}$/PIPE = V_{IL})[17, 18, 19, 20]

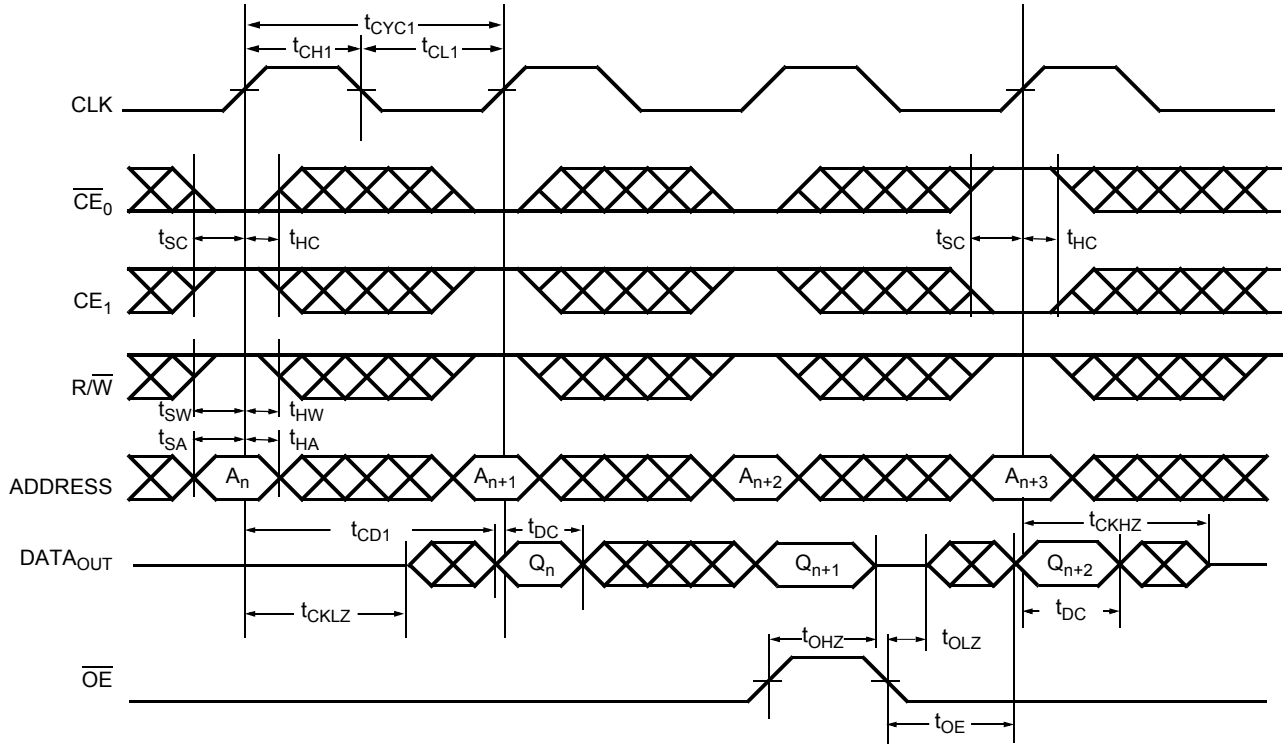

Read Cycle for Pipelined Operation ($\overline{FT}$/PIPE = V_{IH})[17, 18, 19, 20]

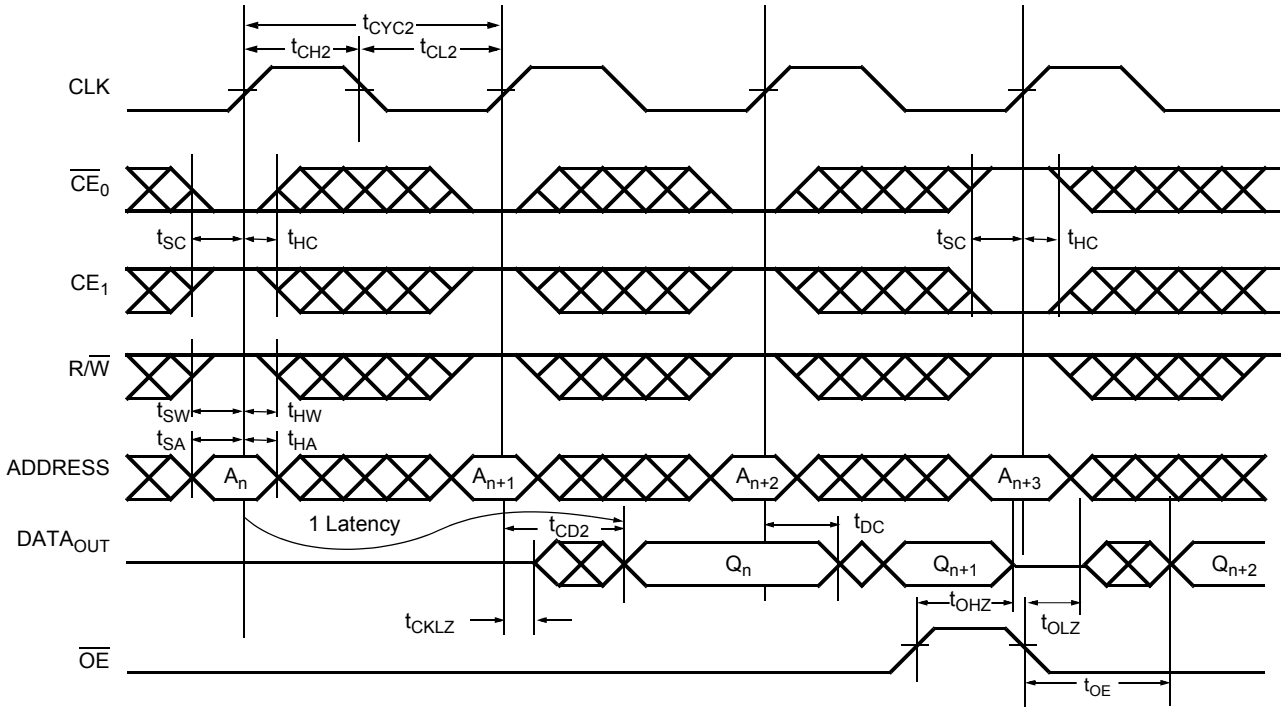

Notes:
17. $\overline{OE}$ is asynchronously controlled; all other inputs are synchronous to the rising clock edge.
18. $\overline{ADS}$ = V_{IL}, $\overline{CNTEN}$ and $\overline{CNTRST}$ = V_{IH}.
19. The output is disabled (high-impedance state) by $\overline{CE}_0$=V_{IH} or CE_1 = V_{IL} following the next rising edge of the clock.
20. Addresses do not have to be accessed sequentially since $\overline{ADS}$ = V_{IL} constantly loads the address on the rising edge of the CLK. Numbers are for reference only.

Switching Waveforms (continued)

Bank Select Pipelined Read[21, 22]

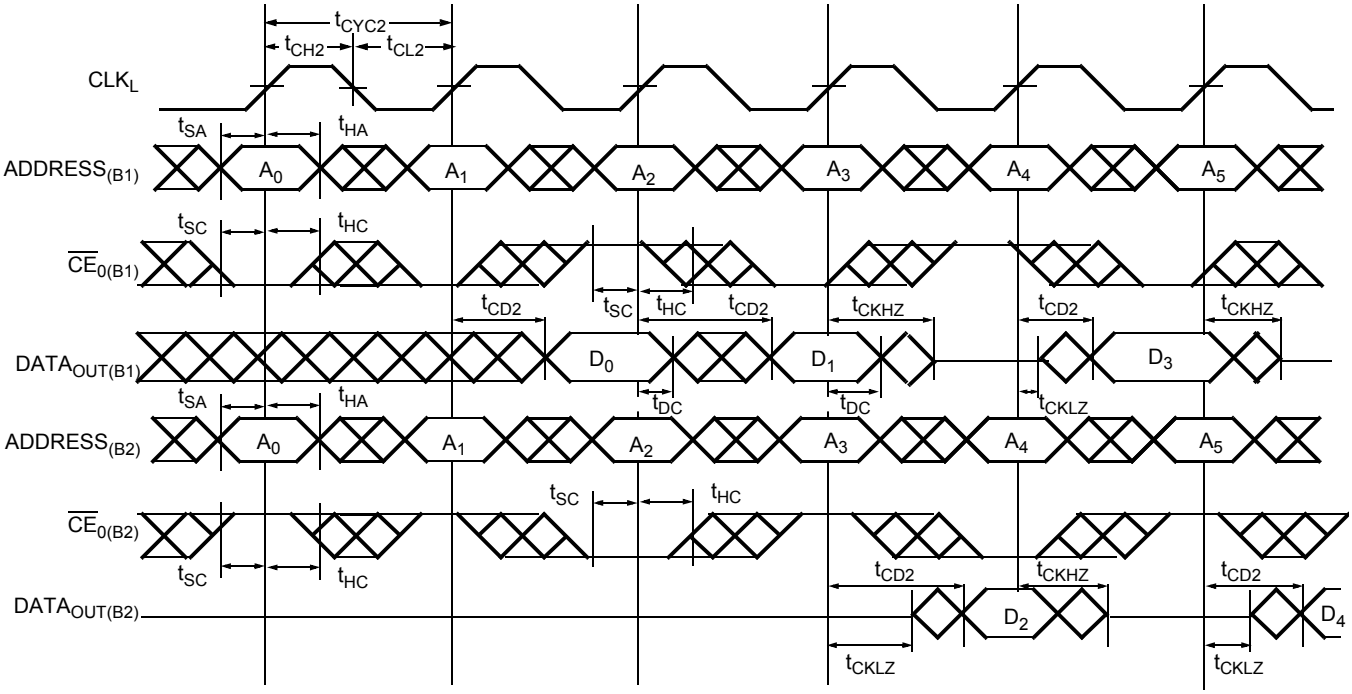

Left Port Write to Flow-Through Right Port Read[23, 24, 25, 26]

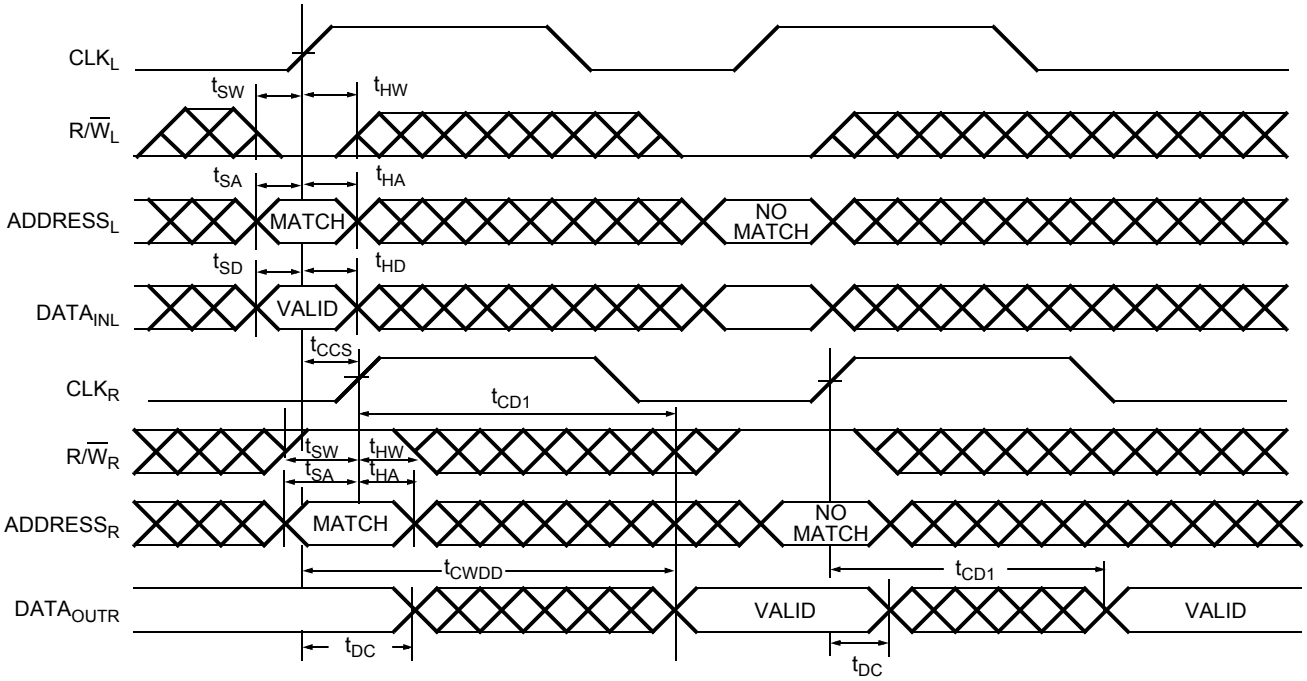

Notes:

21. In this depth expansion example, B1 represents Bank #1 and B2 is Bank #2; Each Bank consists of one Cypress dual-port device from this datasheet. $\overline{ADDRESS}_{(B1)} = \overline{ADDRESS}_{(B2)}$.
22. $\overline{UB}$, $\overline{LB}$, $\overline{OE}$ and $\overline{ADS} = V_{IL}$; $CE_{1(B1)}$, $CE_{1(B2)}$, $R/\overline{W}$, $\overline{CNTEN}$, and $\overline{CNTRST} = V_{IH}$.
23. The same waveforms apply for a right port write to flow-through left port read.
24. $\overline{CE}_0$, $\overline{UB}$, $\overline{LB}$, and $\overline{ADS} = V_{IL}$; CE_1, $\overline{CNTEN}$, and $\overline{CNTRST} = V_{IH}$.
25. $\overline{OE} = V_{IL}$ for the Right Port, which is being read from. $\overline{OE} = V_{IH}$ for the Left Port, which is being written to.
26. It $t_{CCS} \le$ maximum specified, then data from right port READ is not valid until the maximum specified for t_{CWDD}. If t_{CCS}>maximum specified, then data is not valid until $t_{CCS} + t_{CD1}$. t_{CWDD} does not apply in this case.

Switching Waveforms (continued)

Pipelined Read-to-Write-to-Read ($\overline{OE}$ = V_{IL})[20, 27, 28, 29]

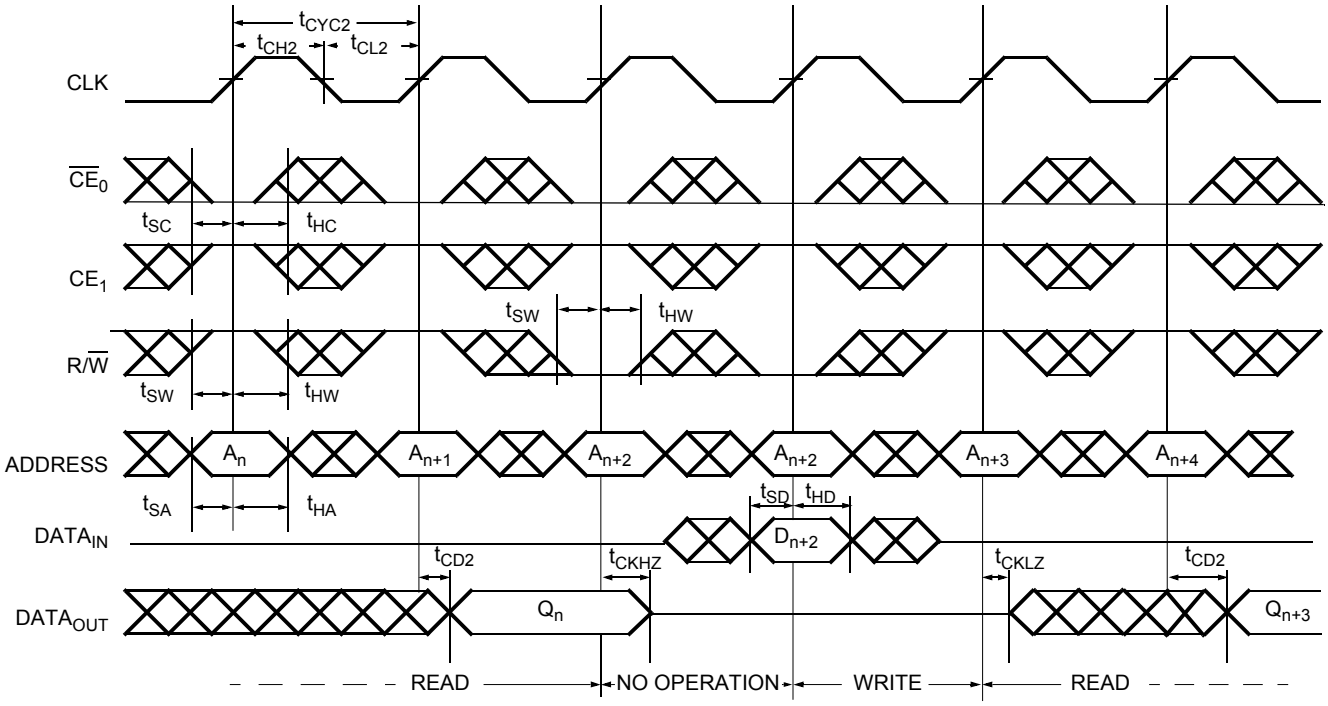

Pipelined Read-to-Write-to-Read ($\overline{OE}$ Controlled)[20, 27, 28, 29]

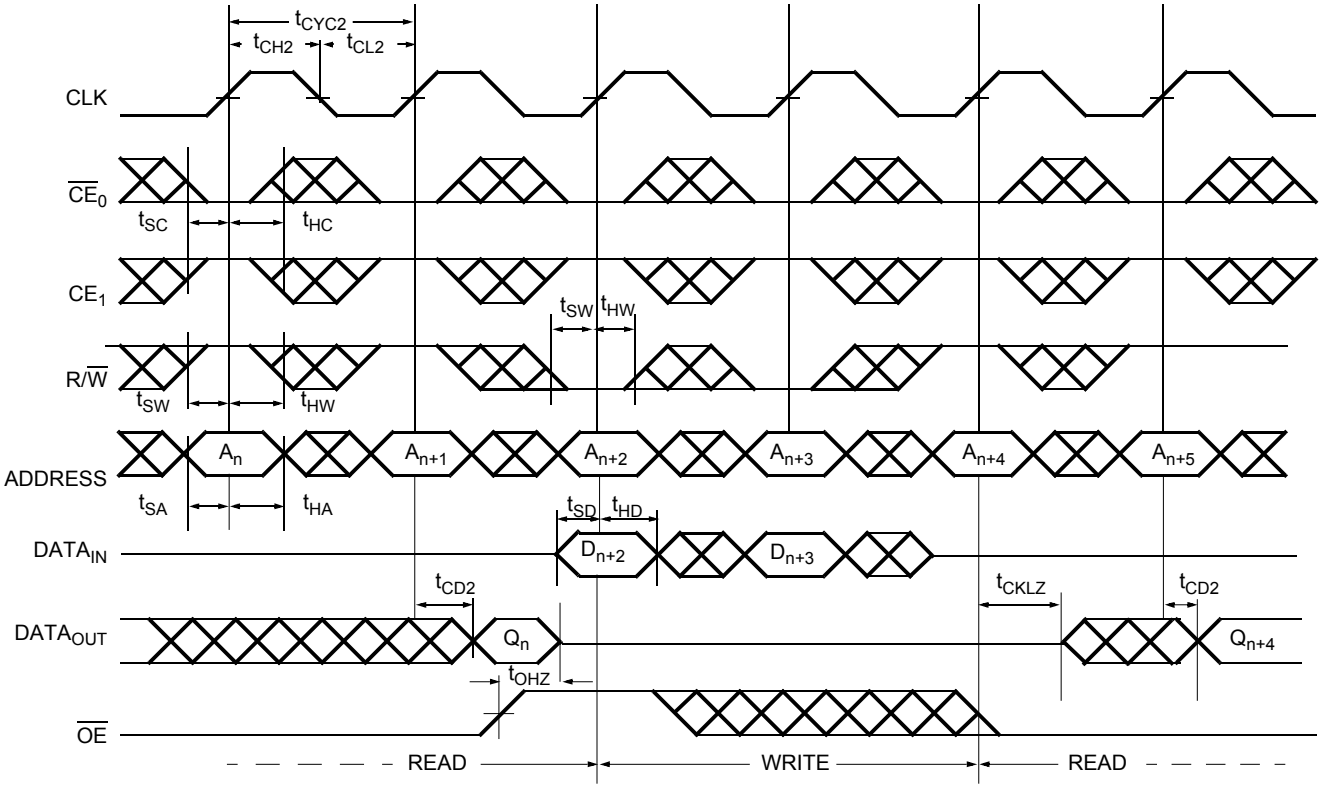

Notes:

27. Output state (High, LOW, or high impedance) is determined by the previous cycle control signals.
28. $\overline{CE_0}$ and $\overline{ADS}$ = V_{IL}; CE_1, $\overline{CNTEN}$, and $\overline{CNTRST}$ = V_{IH}.
29. During "No Operation", data in memory at the selected address may be corrupted and should be rewritten to ensure data integrity.

Switching Waveforms (continued)

Flow-Through Read-to-Write-to-Read ($\overline{OE}$ = V_{IL})[18, 20, 28, 29]

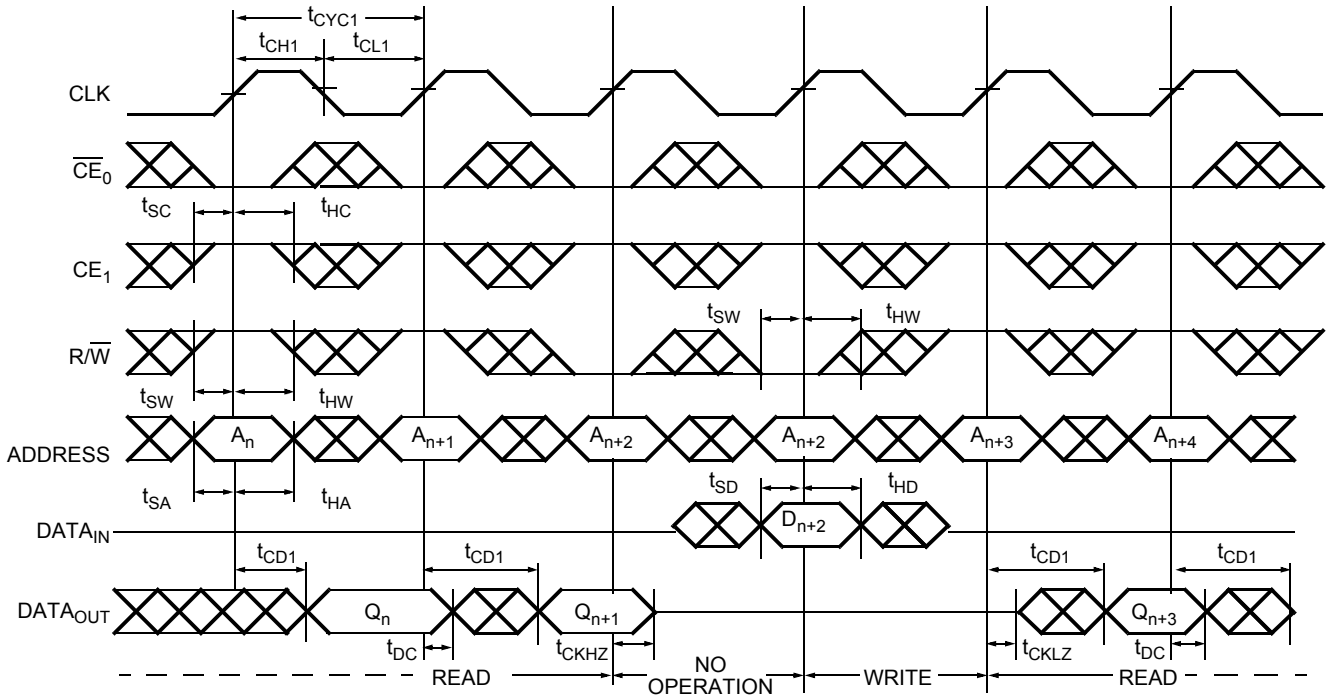

Flow-Through Read-to-Write-to-Read ($\overline{OE}$ Controlled)[18, 20, 27, 28, 29]

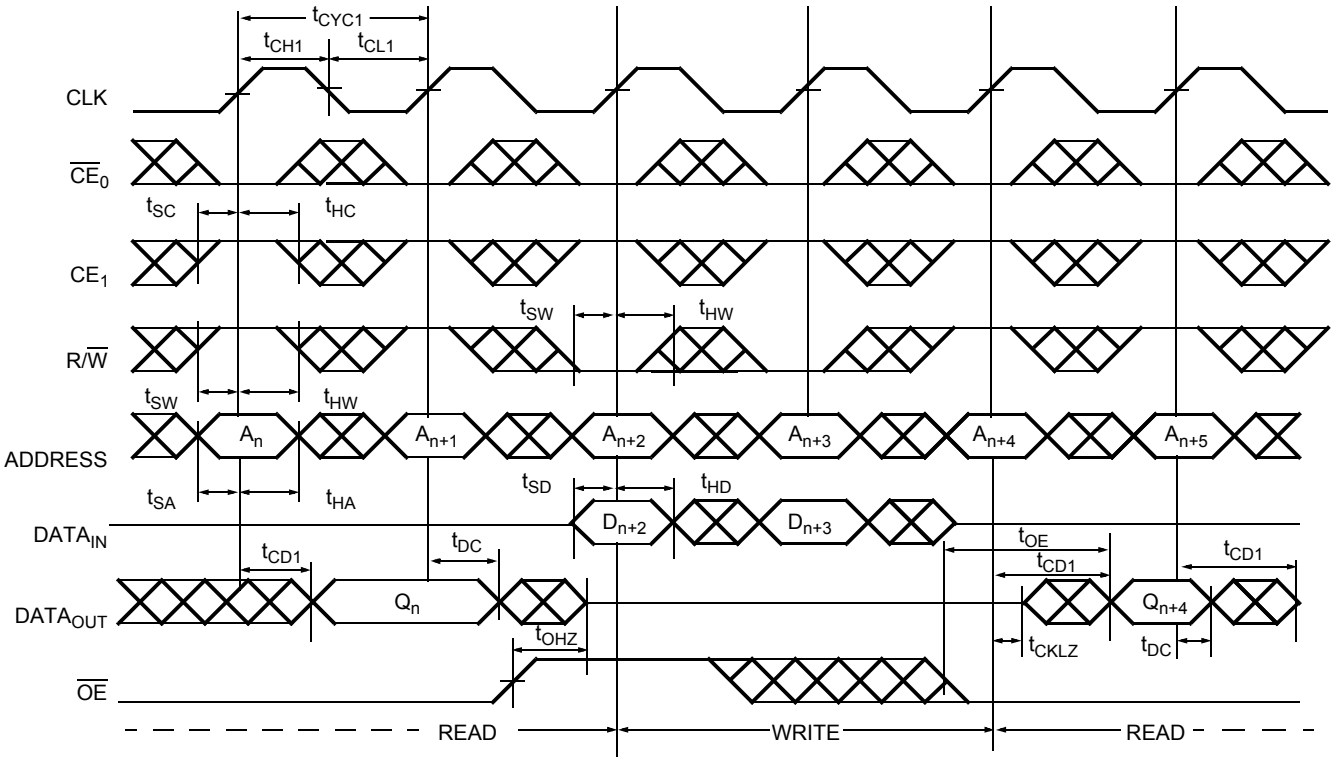

Switching Waveforms (continued)

Pipelined Read with Address Counter Advance[30]

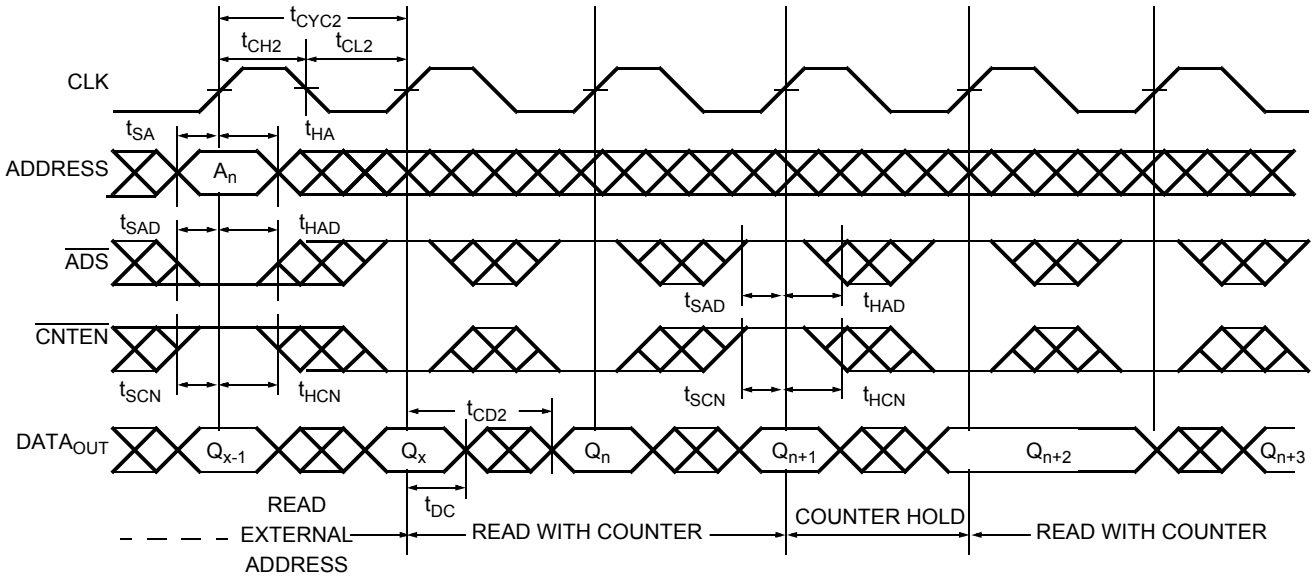

Flow-Through Read with Address Counter Advance[30]

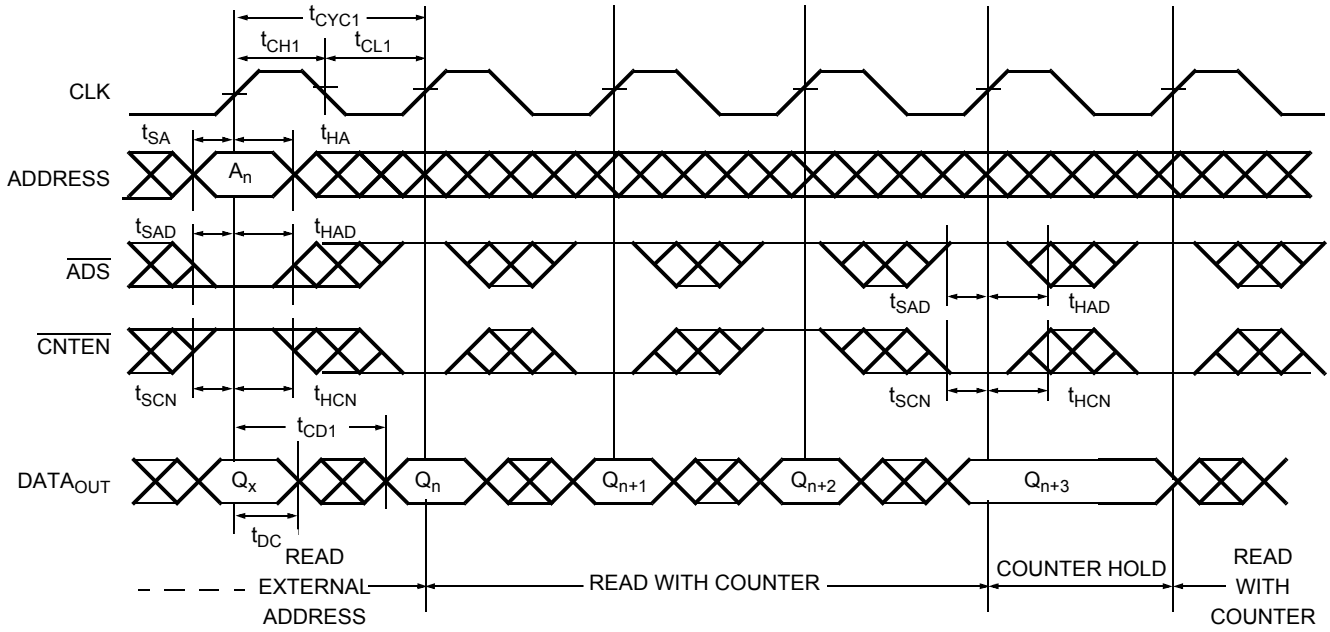

Note:
30. $\overline{CE_0}$ and $\overline{OE}$ = V_{IL}; CE_1, R/$\overline{W}$ and $\overline{CNTRST}$ = V_{IH}.

Switching Waveforms (continued)

Write with Address Counter Advance (Flow-Through or Pipelined Outputs)[31, 32]

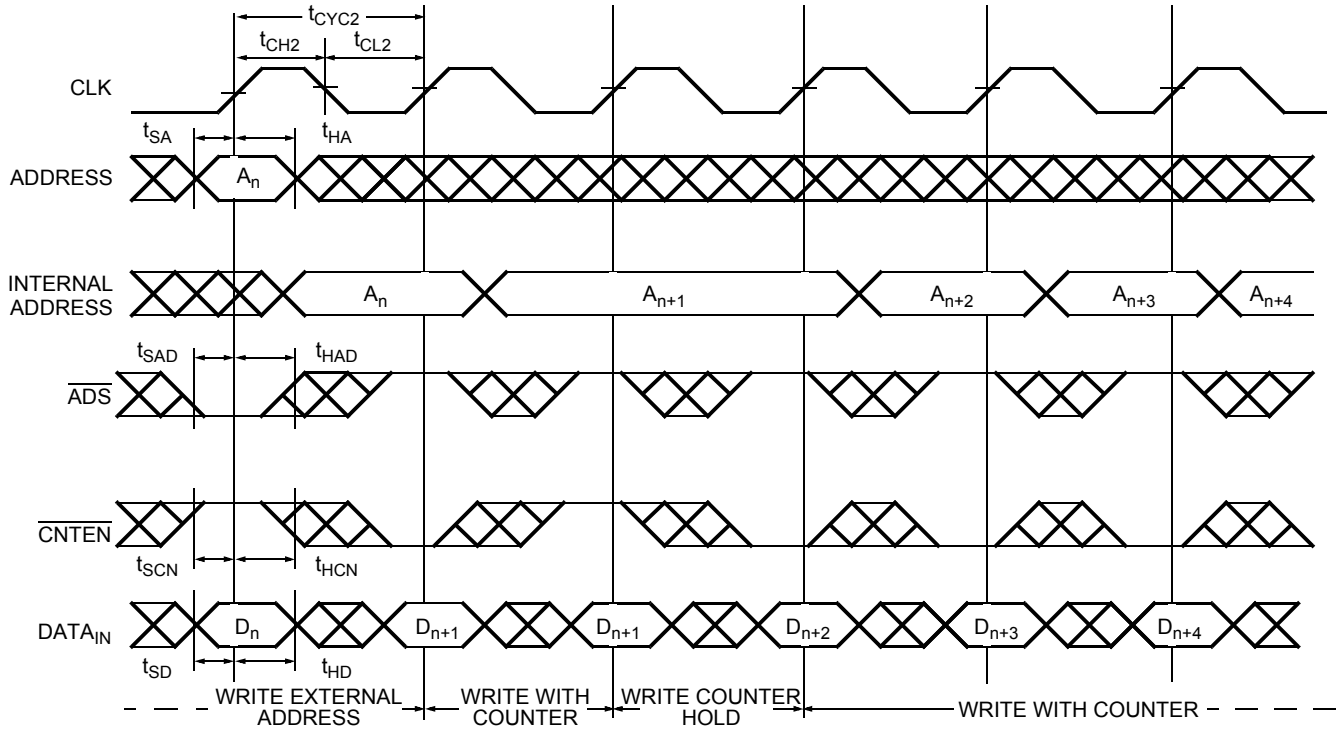

Notes:
31. $\overline{CE_0}$, $\overline{UB}$, $\overline{LB}$, and R/$\overline{W}$ = V_{IL}; CE_1 and $\overline{CNTRST}$ = V_{IH}.
32. The "Internal Address" is equal to the "External Address" when $\overline{ADS}$ = V_{IL} and equals the counter output when $\overline{ADS}$ = V_{IH}.

Switching Waveforms (continued)

Counter Reset (Pipelined Outputs)[20, 27, 33, 34]

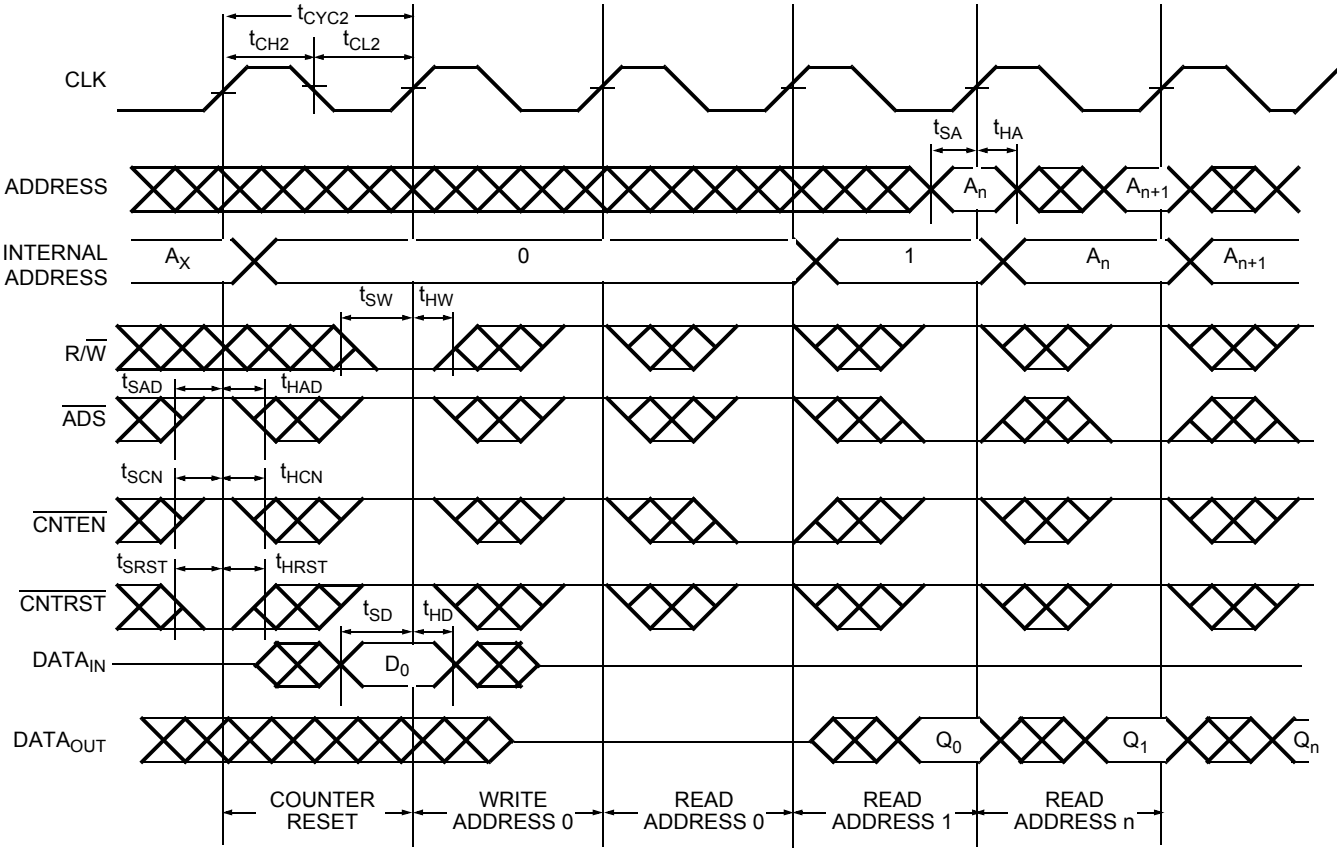

Notes:

33. $\overline{CE_0}$, $\overline{UB}$, and $\overline{LB}$ = V_{IL}; CE_1 = V_{IH}.
34. No dead cycle exists during counter reset. A READ or WRITE cycle may be coincidental with the counter reset.

Read/Write and Enable Operation[35, 36, 37]

Inputs					Outputs	Operation
$\overline{OE}$	CLK	$\overline{CE_0}$	CE_1	$R/\overline{W}$	$I/O_0–I/O_{17}$	
X	↑	H	X	X	High-Z	Deselected[38]
X	↑	X	L	X	High-Z	Deselected[38]
X	↑	L	H	L	D_{IN}	Write
L	↑	L	H	H	D_{OUT}	Read[35]
H	X	L	H	X	High-Z	Outputs Disabled

Address Counter Control Operation[35, 39, 40, 41]

Address	Previous Address	CLK	$\overline{ADS}$	$\overline{CNTEN}$	$\overline{CNTRST}$	I/O	Mode	Operation
X	X	↑	X	X	L	$D_{out(0)}$	Reset	Counter Reset to Address 0
A_n	X	↑	L	X	H	$D_{out(n)}$	Load	Address Load into Counter
X	A_n	↑	H	H	H	$D_{out(n)}$	Hold	External Address Blocked—Counter Disabled
X	A_n	↑	H	L	H	$D_{out(n+1)}$	Increment	Counter Enabled—Internal Address Generation

Notes:
35. "X" = "Don't Care", "H" = V_{IH}, "L" = V_{IL}.
36. $\overline{ADS}$, $\overline{CNTEN}$, $\overline{CNTRST}$ = "Don't Care".
37. $\overline{OE}$ is an asynchronous input signal.
38. When $\overline{CE}$ changes state In the pipelined mode, deselection and read happen in the following clock cycle.
39. $\overline{CE_0}$ and $\overline{OE}$ = V_{IL}; CE_1 and R/W = V_{IH}.
40. Data shown for flow-through mode; pipelined mode output will be delayed by one cycle.
41. Counter operation is independent of $\overline{CE_0}$ and CE_1.

Ordering Information

16K x16 3.3V Synchronous Dual-Port SRAM

Speed (ns)	Ordering Code	Package Name	Package Type	Operating Range
6.5[1, 2]	CY7C09269V-6AC	A100	100-Pin Thin Quad Flat Pack	Commercial
	CY7C09269V-6AXC	A100	100-Pin Pb-Free Thin Quad Flat Pack	Commercial
7.5[2]	CY7C09269V-7AC	A100	100-Pin Thin Quad Flat Pack	Commercial
	CY7C09269V-7AXC	A100	100-Pin Pb-Free Thin Quad Flat Pack	Commercial
9	CY7C09269V-9AC	A100	100-Pin Thin Quad Flat Pack	Commercial
	CY7C09269V-9AXC	A100	100-Pin Pb-Free Thin Quad Flat Pack	Commercial
	CY7C09269V-9AI	A100	100-Pin Thin Quad Flat Pack	Industrial
12	CY7C09269V-12AC	A100	100-Pin Thin Quad Flat Pack	Commercial
	CY7C09269V-12AXC	A100	100-Pin Pb-Free Thin Quad Flat Pack	Commercial

32K x16 3.3V Synchronous Dual-Port SRAM

Speed (ns)	Ordering Code	Package Name	Package Type	Operating Range
6.5[1, 2]	CY7C09279V-6AC	A100	100-Pin Thin Quad Flat Pack	Commercial
	CY7C09279V-6AXC	A100	100-Pin Pb-Free Thin Quad Flat Pack	Commercial
7.5[2]	CY7C09279V-7AC	A100	100-Pin Thin Quad Flat Pack	Commercial
	CY7C09279V-7AXC	A100	100-Pin Pb-Free Thin Quad Flat Pack	Commercial
9	CY7C09279V-9AC	A100	100-Pin Thin Quad Flat Pack	Commercial
	CY7C09279V-9AI	A100	100-Pin Thin Quad Flat Pack	Industrial
12	CY7C09279V-12AC	A100	100-Pin Thin Quad Flat Pack	Commercial
	CY7C09279V-12AXC	A100	100-Pin Pb-Free Thin Quad Flat Pack	Commercial

64K x16 3.3V Synchronous Dual-Port SRAM

Speed (ns)	Ordering Code	Package Name	Package Type	Operating Range
6.5[1, 2]	CY7C09289V-6AC	A100	100-Pin Thin Quad Flat Pack	Commercial
	CY7C09289V-6AXC	A100	100-Pin Pb-Free Thin Quad Flat Pack	Commercial
7.5[2]	CY7C09289V-7AC	A100	100-Pin Thin Quad Flat Pack	Commercial
	CY7C09289V-7AXC	A100	100-Pin Pb-Free Thin Quad Flat Pack	Commercial
9	CY7C09289V-9AC	A100	100-Pin Thin Quad Flat Pack	Commercial
	CY7C09289V-9AXC	A100	100-Pin Pb-Free Thin Quad Flat Pack	Commercial
	CY7C09289V-9AI	A100	100-Pin Thin Quad Flat Pack	Industrial
	CY7C09289V-9AXI	A100	100-Pin Pb-Free Thin Quad Flat Pack	Industrial
12	CY7C09289V-12AC	A100	100-Pin Thin Quad Flat Pack	Commercial
	CY7c09289V-12AXC	A100	100-Pin Pb-Free Thin Quad Flat Pack	Commercial

16K x18 3.3V Synchronous Dual-Port SRAM

Speed (ns)	Ordering Code	Package Name	Package Type	Operating Range
6.5[1, 2]	CY7C09369V-6AC	A100	100-Pin Thin Quad Flat Pack	Commercial
	CY7C09369V-6AXC	A100	100-Pin Pb-Free Thin Quad Flat Pack	Commercial
7.5[2]	CY7C09369V-7AC	A100	100-Pin Thin Quad Flat Pack	Commercial
	CY7C09269V-7AXC	A100	100-Pin Pb-Free Thin Quad Flat Pack	Commercial
	CY7C09369V-7AI	A100	100-Pin Thin Quad Flat Pack	Industrial
9	CY7C09369V-9AC	A100	100-Pin Thin Quad Flat Pack	Commercial
	CY7C09369V-9AXC	A100	100-Pin Pb-Free Thin Quad Flat Pack	Commercial
	CY7C09369V-9AI	A100	100-Pin Thin Quad Flat Pack	Industrial
12	CY7C09369V-12AC	A100	100-Pin Thin Quad Flat Pack	Commercial
	CY7C09369V-12AXC	A100	100-Pin Pb-Free Thin Quad Flat Pack	Commercial

32K x18 3.3V Synchronous Dual-Port SRAM

Speed (ns)	Ordering Code	Package Name	Package Type	Operating Range
6.5[1, 2]	CY7C09379V-6AC	A100	100-Pin Thin Quad Flat Pack	Commercial
	CY7C09379V-6AXC	A100	100-Pin Pb-Free Thin Quad Flat Pack	Commercial
7.5[2]	CY7C09379V-7AC	A100	100-Pin Thin Quad Flat Pack	Commercial
9	CY7C09379V-9AC	A100	100-Pin Thin Quad Flat Pack	Commercial
	CY7C09379V-9AI	A100	100-Pin Thin Quad Flat Pack	Industrial
12	CY7C09379V-12AC	A100	100-Pin Thin Quad Flat Pack	Commercial
	CY7C09379V-12AXC	A100	100-Pin Pb-Free Thin Quad Flat Pack	Commercial

64K x18 3.3V Synchronous Dual-Port SRAM

Speed (ns)	Ordering Code	Package Name	Package Type	Operating Range
6.5[1, 2]	CY7C09389V-6AC	A100	100-Pin Thin Quad Flat Pack	Commercial
	CY7C09389V-6AXC	A100	100-Pin Pb-Free Thin Quad Flat Pack	Commercial
7.5[2]	CY7C09389V-7AC	A100	100-Pin Thin Quad Flat Pack	Commercial
	CY7C09389v-7AXC	A100	100-Pin Pb-Free Thin Quad Flat Pack	Commercial
9	CY7C09389V-9AC	A100	100-Pin Thin Quad Flat Pack	Commercial
	CY7C09389V-9AXC	A100	100-Pin Pb-Free Thin Quad Flat Pack	Commercial
	CY7C09389V-9AI	A100	100-Pin Thin Quad Flat Pack	Industrial
	CY7C09389V-9AXI	A100	100-Pin Pb-Free Thin Quad Flat Pack	Industrial
12	CY7C09389V-12AC	A100	100-Pin Thin Quad Flat Pack	Commercial
	CY7C09389V-12AXC	A100	100-Pin Pb-Free Thin Quad Flat Pack	Commercial

Package Diagram

100-Pin Thin Plastic Quad Flat Pack (TQFP) A100
100-Pin Pb-Free Thin Plastic Quad Flat Pack (TQFP) A100

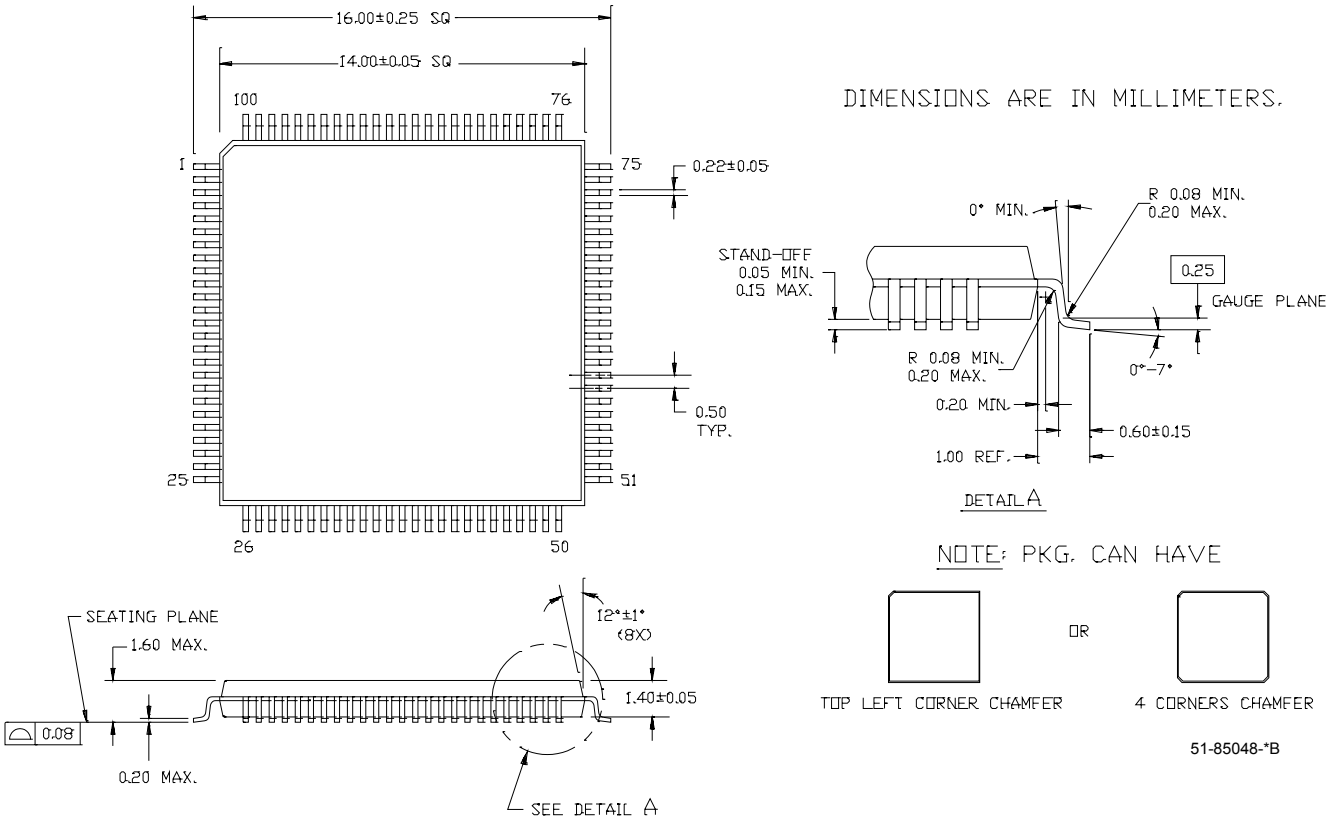

All products and company names mentioned in this document may be the trademarks of their respective holders.

© Cypress Semiconductor Corporation, 2005. The information contained herein is subject to change without notice. Cypress Semiconductor Corporation assumes no responsibility for the use of any circuitry other than circuitry embodied in a Cypress product. Nor does it convey or imply any license under patent or other rights. Cypress products are not warranted nor intended to be used for medical, life support, life saving, critical control or safety applications, unless pursuant to an express written agreement with Cypress. Furthermore, Cypress does not authorize its products for use as critical components in life-support systems where a malfunction or failure may reasonably be expected to result in significant injury to the user. The inclusion of Cypress products in life-support systems application implies that the manufacturer assumes all risk of such use and in doing so indemnifies Cypress against all charges.

Document History Page

Document Title: CY7C09269V/79V/89V CY7C09369V/79V/89V 3.3V 16K/32K/64K X 16/18 Synchronous Dual Port Static RAM Document Number: 38-06056				
REV.	**ECN NO.**	**Issue Date**	**Orig. of Change**	**Description of Change**
**	110215	12/18/01	SZV	Change from Spec number: 38-00668 to 38-06056
*A	122306	12/27/02	RBI	Power up requirements added to Maximum Ratings Information
*B	344354	See ECN	PCX	Added Pb-Free Part Ordering Information

О компании

ООО "ТрейдЭлектроникс" - это оперативные поставки широкого спектра электронных компонентов отечественного и импортного производства напрямую от производителей и с крупнейших мировых складов. Реализуемая нашей компанией продукция насчитывает более полумиллиона наименований.

Благодаря этому наша компания предлагает к поставке практически не ограниченный ассортимент компонентов как оптовыми, мелкооптовыми партиями, так и в розницу.

Наличие собственной эффективной системы логистики обеспечивает надежную поставку продукции по конкурентным ценам в точно указанные сроки.

Срок поставки со стоков в **Европе и Америке – от 3 до 14 дней.**

Срок поставки из **Азии – от 10 дней.**

Благодаря развитой сети поставщиков, помогаем в поиске и приобретении экзотичных или снятых с производства компонентов.

Предоставляем спец цены на элементы для создания инженерных сэмплов.

Упорный труд, качественный результат дают нам право быть уверенными в себе и надежными для наших клиентов.

Наша компания это:

- Гарантия качества поставляемой продукции
- Широкий ассортимент
- Минимальные сроки поставок
- Техническая поддержка
- Подбор комплектации
- Индивидуальный подход
- Гибкое ценообразование

Наша организация особенно сильна в поставках модулей, микросхем, пассивных компонентов, ксайленсах (XC), EPF, EPM и силовой электроники.

Большой выбор предлагаемой продукции, различные виды оплаты и доставки, позволят Вам сэкономить время и получить максимум выгоды от сотрудничества с нами!

Trade Electronics.ru

гарантия бесперебойности производства и качества выпускаемой продукции

Перечень производителей, продукцию которых мы поставляем на российский рынок

AMD
ANALOG DEVICES
BOURNS
Coilcraft
élantec Semiconductor, Inc.
HARRIS
Infineon
JRC
MICREL
MOTOROLA
nichicon
PHILIPS
ROHM
SGS-THOMSON
Sipex
TAIYO YUDEN
TOKO
ZILOG
Winbond
Allegro
ATMEL
BURR - BROWN
EXAR
HITACHI
intel
Lattice
muRata
OKI
QUALCOMM
SAMSUNG
SHARP
SONY
TDK
TOSHIBA
KYOCERA
ALTERA
AVX
CITILYST
CYPRESS
FAIRCHILD SEMICONDUCTOR
HOLTEK
International IOR Rectifier
LINEAR TECHNOLOGY
MITSUBISHI
National Semiconductor
ON Semiconductor
REALTEK
SANYO
SHINDENGEN
SGS
TECCOR
TUNDRA
XILINX
Amphenol
Bay Linear
CIRRUS LOGIC
DALLAS
FUJITSU
IDT
intersil
MAXIM
molex
NEC
Panasonic
RENESAS
SII
SIEMENS
ST
Texas Instruments
VISHAY
ZETEX SEMICONDUCTORS

Trade Electronics.ru

гарантия бесперебойности производства и качества выпускаемой продукции

С удовольствием будем прорабатывать для Вас поставки всех необходимых компонентов по текущим запросам для скорейшего выявления групп элементов, по которым сотрудничество именно с нашей компанией будет для Вас максимально выгодным!

С уважением,

Менеджер отдела продаж ООО

«Трейд Электроникс»

Шишлаков Евгений

8 (495)668-30-28 доб 169

manager28@tradeelectronics.ru

http://www.tradeelectronics.ru/