100 MHz to 2.7 GHz, 45 dB RF Detector/Controller

AD8314

FEATURES

Complete RF detector/controller function
Typical range:–58 dBV to –13 dBV
–45 dBm to 0 dBm, re 50 Ω
Frequency response from 100 MHz to 2.7 GHz
Temperature-stable linear-in-dB response
Accurate to 2.7 GHz
Rapid response: 70 ns to a 10 dB step
Low power: 12 mW at 2.7 V
Power down to 20 µA

APPLICATIONS

Cellular handsets (TDMA, CDMA , GSM)
RSSI and TSSI for wireless terminal devices
Transmitter power measurement and control

GENERAL DESCRIPTION

The AD8314 is a complete low cost subsystem for the measurement and control of RF signals in the frequency range of 100 MHz to 2.7 GHz, with a typical dynamic range of 45 dB, intended for use in a wide variety of cellular handsets and other wireless devices. It provides a wider dynamic range and better accuracy than possible using discrete diode detectors. In particular, its temperature stability is excellent over the full operating range of –40°C to +85°C.

Its high sensitivity allows control at low power levels, thus reducing the amount of power that needs to be coupled to the detector. It is essentially a voltage-responding device, with a typical signal range of 1.25 mV to 224 mV rms or –58 dBV to –13 dBV. This is equivalent to –45 dBm to 0 dBm, re 50 Ω.

For convenience, the signal is internally ac-coupled, using a 5 pF capacitor to a load of 3 kΩ in shunt with 2 pF. This high-pass coupling, with a corner at approximately 16 MHz, determines the lowest operating frequency. Therefore, the source can be dc grounded.

The AD8314 provides two voltage outputs. The first, V_UP, increases from close to ground to about 1.2 V as the input signal level increases from 1.25 mV to 224 mV. This output is intended for use in measurement mode. Consult the Applications section for information on this mode. A capacitor can be connected between the V_UP and FLTR pins when it is desirable to increase the time interval over which averaging of the input waveform occurs.

The second output, V_DN, is an inversion of V_UP but with twice the slope and offset by a fixed amount. This output starts at about 2.25 V (provided the supply voltage is ≥3.3 V) for the minimum input and falls to a value close to ground at the maximum input. This output is intended for analog control loop applications. A setpoint voltage is applied to VSET, and V_DN is then used to control a VGA or power amplifier. Here again, an external filter capacitor can be added to extend the averaging time. Consult the Applications section for information on this mode.

The AD8314 is available in 8-lead MSOP and 8-lead LFCSP packages and consumes 4.5 mA from a 2.7 V to 5.5 V supply. When powered down, the typical sleep current is 20 µA.

FUNCTIONAL BLOCK DIAGRAM

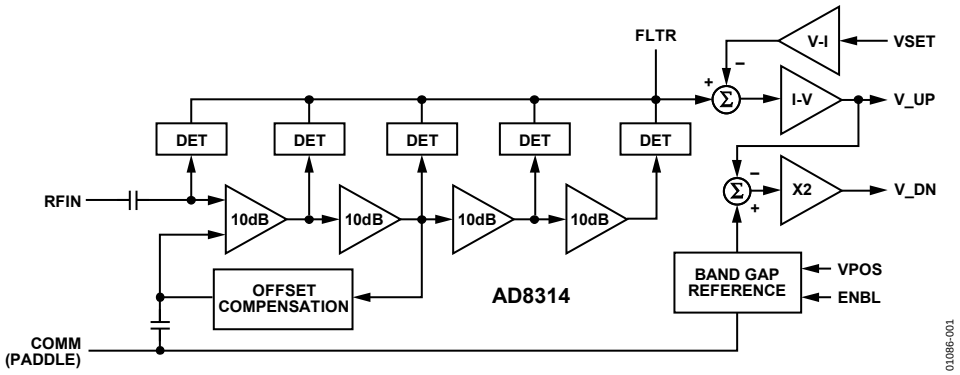

Figure 1.

Rev. B
Information furnished by Analog Devices is believed to be accurate and reliable. However, no responsibility is assumed by Analog Devices for its use, nor for any infringements of patents or other rights of third parties that may result from its use. Specifications subject to change without notice. No license is granted by implication or otherwise under any patent or patent rights of Analog Devices. Trademarks and registered trademarks are the property of their respective owners.

One Technology Way, P.O. Box 9106, Norwood, MA 02062-9106, U.S.A.
Tel: 781.329.4700 **www.analog.com**
Fax: 781.461.3113
©2006 Analog Devices, Inc. All rights reserved.

TABLE OF CONTENTS

Features ... 1
Applications ... 1
General Description ... 1
Functional Block Diagram ... 1
Revision History ... 2
Specifications ... 3
Absolute Maximum Ratings ... 4
ESD Caution ... 4
Pin Configurations and Function Descriptions ... 5
Typical Performance Characteristics ... 6
Theory of Operation ... 10
Inverted Output ... 11
Applications ... 12
Basic Connections ... 12
Transfer Function in Terms of Slope and Intercept ... 12
dBV vs. dBm ... 13
Filter Capacitor ... 13
Operating in Controller Mode ... 13
Power-On and Enable Glitch ... 14
Input Coupling Options ... 14
Increasing the Logarithmic Slope in Measurement Mode ... 15
Effect of Waveform Type on Intercept ... 15
Mobile Handset Power Control Examples ... 16
Operation at 2.7 GHz ... 18
Using the LFCSP Package ... 18
Evaluation Board ... 18
Outline Dimensions ... 20
Ordering Guide ... 20

REVISION HISTORY

5/06—Rev. A to Rev. B

Updated Format ... Universal
Changes to General Description ... 1
Changes to Table 1 ... 3
Changes to Table 2 ... 4
Inserted Figure 3; Renumbered Sequentially ... 5
Changes to Figure 4, Figure 5, Figure 6, Figure 7, and Figure 8 ... 6
Changes to Figure 9, Figure 10, and Figure 12 ... 7
Changes to Figure 37 ... 14
Changes to Table 5 ... 15
Changes to Figure 39 ... 16
Changes to Table 7 ... 19
Updated Outline Dimensions ... 20
Changes to Ordering Guide ... 20

3/02—Rev. 0 to Rev. A

Edit to Product Description ... 1
Edit to Specifications ... 2
Edit to Ordering Guide ... 3
Edit to TPC 1 ... 4
New Section (Operation at 2.7 GHz) Added ... 14
Addition of New Figures 14 and 15 ... 14
Changes to Evaluation Board Section ... 14
Addition of Chip Scale Package ... 16

SPECIFICATIONS

V_S = 3 V, T_A = 25°C, unless otherwise noted.

Table 1.

Parameter	Conditions	Min	Typ	Max	Unit
OVERALL FUNCTION					
Frequency Range[1]	To meet all specifications	0.1		2.5	GHz
Input Voltage Range	Internally ac-coupled	1.25		224	mV rms
Equivalent Power Range	52.3 Ω external termination	−45		0	dBm
Logarithmic Slope	Main output, V_UP, 100 MHz[2]	18.85	21.3	23.35	mV/dB
Logarithmic Intercept	Main output, V_UP, 100 MHz	−68	−62	−56	dBV
Equivalent dBm Level	52.3 Ω external termination	−55	−49	−43	dBm
INPUT INTERFACE	Pin RFIN				
DC Resistance to COMM			100		kΩ
Inband Input Resistance	f = 0.1 GHz		3		kΩ
Input Capacitance	f = 0.1 GHz		2		pF
MAIN OUTPUT	Pin V_UP				
Voltage Range	V_UP connected to VSET	0.01		1.2	V
Minimum Output Voltage	No signal at RFIN, $R_L \geq 10$ kΩ	0.01	0.02	0.05	V
Maximum Output Voltage[3]	$R_L \geq 10$ kΩ	1.9	2		V
General Limit	$2.7\ V \leq V_S \leq 5.5\ V$	$V_S - 1.1$	$V_S - 1$		V
Available Output Current	Sourcing/sinking	1/0.5	2/1		mA
Response Time	10% to 90%, 10 dB step		70		ns
Residual RF (at 2f)	f = 0.1 GHz (worst condition)		100		µV
INVERTED OUTPUT	Pin V_DN				
Gain Referred to V_UP	$V_{DN} = 2.25\ V - 2 \times V_{UP}$		−2		
Minimum Output Voltage	$V_S \geq 3.3$ V	0.01	0.05	0.1	V
Maximum Output Voltage	$V_S \geq 3.3$ V[4]	2.1	2.2	2.5	V
Available Output Current	Sourcing/sinking	4/100	6/200		mA/µA
Output-Referred Noise	RF input = 2 GHz, −33 dBV, f_{NOISE} = 10 kHz		1.05		µV/√Hz
Response Time	10% to 90%, 10 dB input step		70		ns
Full-Scale Settling Time	−40 dBm to 0 dBm input step to 95%		150		ns
SETPOINT INPUT	Pin VSET				
Voltage Range	Corresponding to central 40 dB	0.15		1.2	V
Input Resistance		7	10		kΩ
Logarithmic Scale Factor	f = 0.900 GHz		20.7		mV/dB
	f = 1.900 GHz		19.7		mV/dB
ENABLE INTERFACE	Pin ENBL				
Logic Level to Enable Power	HI condition, $-40°C \leq T_A \leq +85°C$	1.6		V_{POS}	V
Input Current when HI	2.7 V at ENBL, $-40°C \leq T_A \leq +85°C$		20	300	µA
Logic Level to Disable Power	LO condition, $-40°C \leq T_A \leq +85°C$	−0.5		+0.8	V
POWER INTERFACE	Pin VPOS				
Supply Voltage		2.7	3.0	5.5	V
Quiescent Current		3.0	4.5	5.7	mA
Overtemperature	$-40°C \leq T_A \leq +85°C$	2.7	4.4	6.6	mA
Total Supply Current when Disabled			20	95	µA
Overtemperature	$-40°C \leq T_A \leq +85°C$		40		µA

[1] For a discussion on operation at higher frequencies, see Applications section.
[2] Mean and standard deviation specifications are available in Table 4.
[3] Increased output possible when using an attenuator between V_UP and VSET to raise the slope.
[4] Refer to Figure 22 for details.

ABSOLUTE MAXIMUM RATINGS

Table 2.

Parameter	Value
Supply Voltage VPOS	5.5 V
V_UP, V_DN, VSET, ENBL	0 V, VPOS
Input Voltage	1.6 V rms
Equivalent Power	17 dBm
Internal Power Dissipation	200 mW
θ_{JA} (MSOP)	200°C/W
θ_{JA} (LFCSP, Paddle Soldered)	80°C/W
θ_{JA} (LFCSP, Paddle Not Soldered)	200°C/W
Maximum Junction Temperature	125°C
Operating Temperature Range	−40°C to +85°C
Storage Temperature Range	−65°C to +150°C
Lead Temperature (Soldering 60 sec)	
8-Lead MSOP	300°C
8-Lead LFCSP	240°C

Stresses above those listed under Absolute Maximum Ratings may cause permanent damage to the device. This is a stress rating only; functional operation of the device at these or any other conditions above those indicated in the operational section of this specification is not implied. Exposure to absolute maximum rating conditions for extended periods may affect device reliability.

ESD CAUTION

ESD (electrostatic discharge) sensitive device. Electrostatic charges as high as 4000 V readily accumulate on the human body and test equipment and can discharge without detection. Although this product features proprietary ESD protection circuitry, permanent damage may occur on devices subjected to high energy electrostatic discharges. Therefore, proper ESD precautions are recommended to avoid performance degradation or loss of functionality.

PIN CONFIGURATIONS AND FUNCTION DESCRIPTIONS

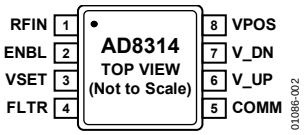

Figure 2. RM-8 Pin Configuration

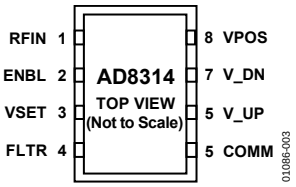

Figure 3. CP-8-1 Pin Configuration

Table 3. Pin Function Descriptions

Pin No.	Mnemonic	Description
1	RFIN	RF Input.
2	ENBL	Connect Pin to V_S for Normal Operation. Connect pin to ground for disable mode.
3	VSET	Setpoint Input for Operation in Controller Mode. To operate in detector mode connect VSET to V_UP.
4	FLTR	Connection for an External Capacitor to Slow the Response of the Output. Capacitor is connected between FLTR and V_UP.
5	COMM	Device Common (Ground)
6	V_UP	Logarithmic Output. Output voltage increases with increasing input amplitude.
7	V_DN	Inversion of V_UP, Governed by: V_DN = 2.25 V − 2 × V_{UP}.
8	VPOS	Positive Supply Voltage (V_S), 2.7 V to 5.5 V.

TYPICAL PERFORMANCE CHARACTERISTICS

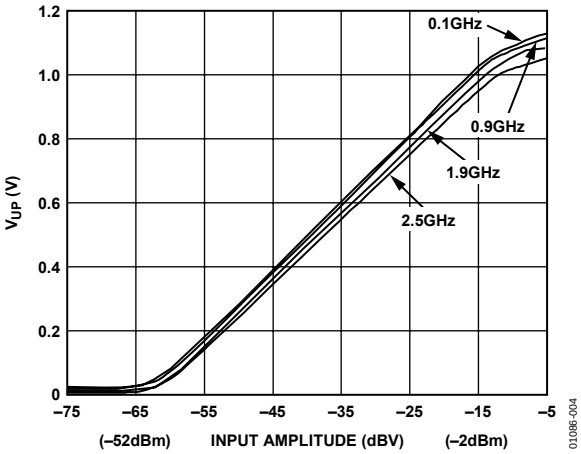

Figure 4. V_{UP} vs. Input Amplitude

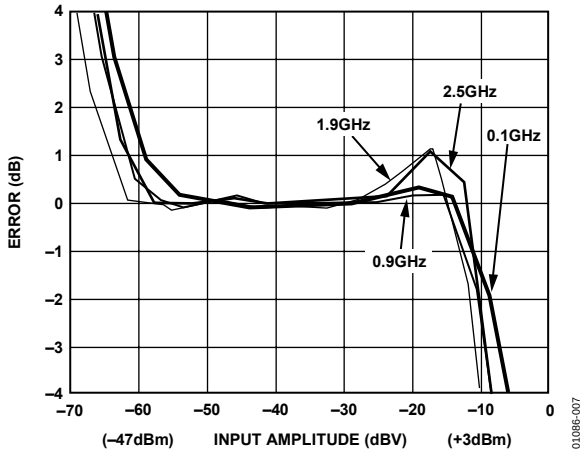

Figure 7. Log Conformance vs. Input Amplitude

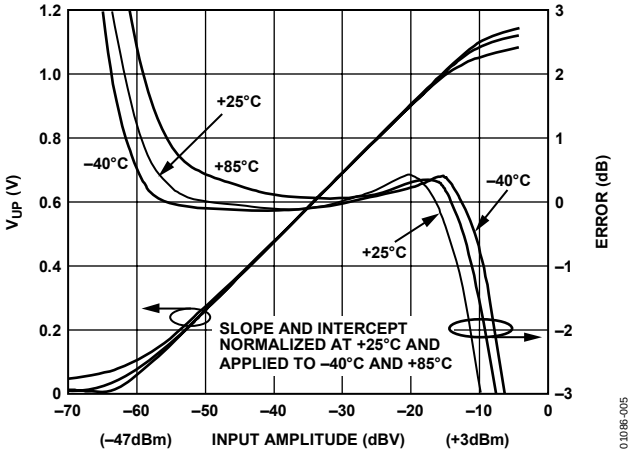

Figure 5. V_{UP} and Log Conformance vs. Input Amplitude at 0.1 GHz; −40°C, +25°C, and +85°C

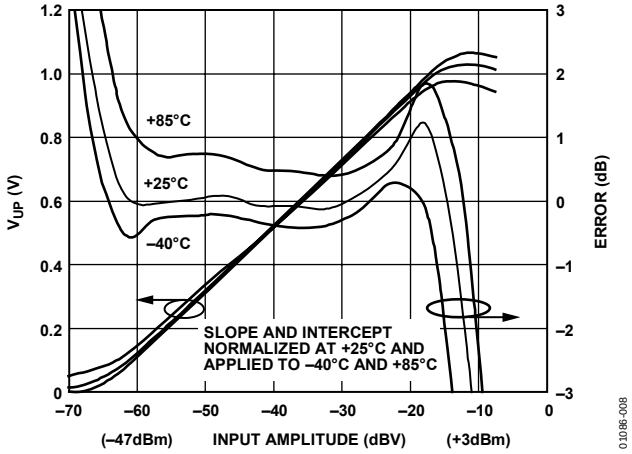

Figure 8. V_{UP} and Log Conformance vs. Input Amplitude at 1.9 GHz; −40°C, +25°C, and +85°C

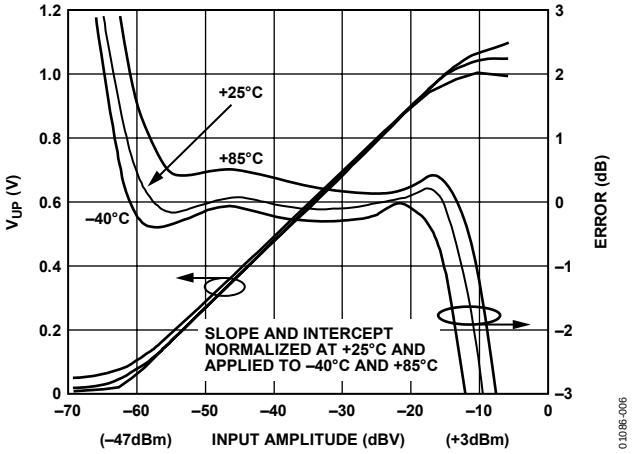

Figure 6. V_{UP} and Log Conformance vs. Input Amplitude at 0.9 GHz; −40°C, +25°C, and +85°C

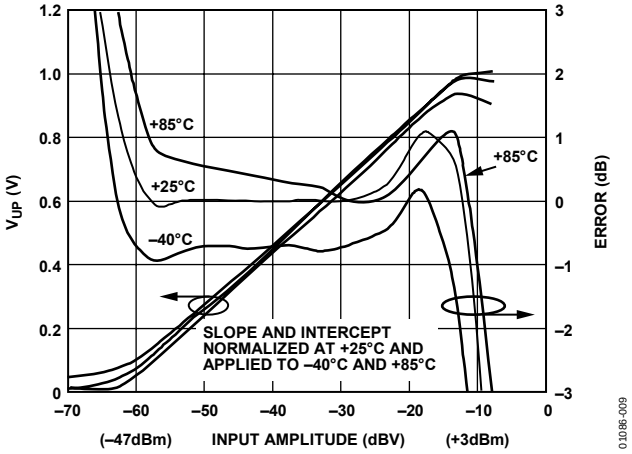

Figure 9. V_{UP} and Log Conformance vs. Input Amplitude at 2.5 GHz; −40°C, +25°C, and +85°C

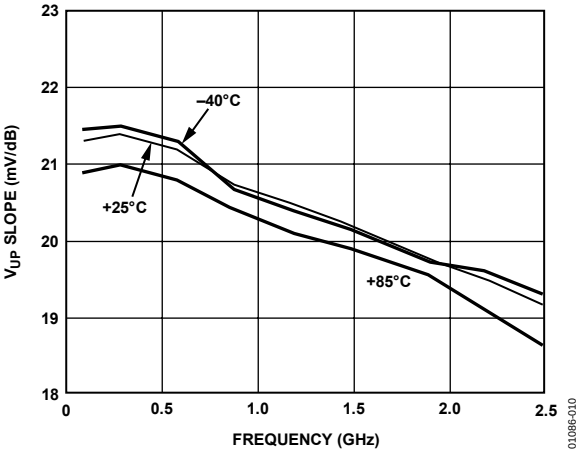

Figure 10. Slope vs. Frequency; –40°C, +25°C, and +85°C

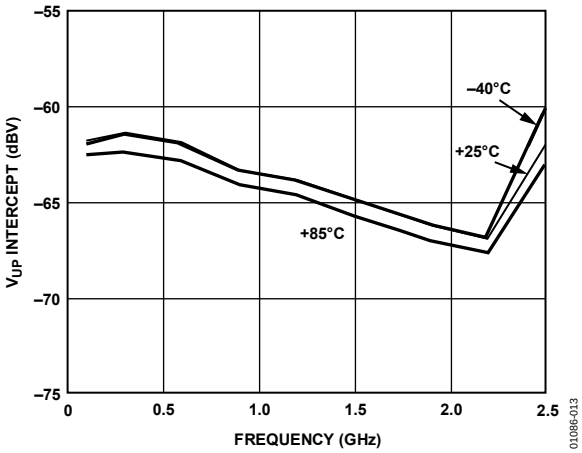

Figure 13. V_{UP} Intercept vs. Frequency; –40°C, +25°C, and +85°C

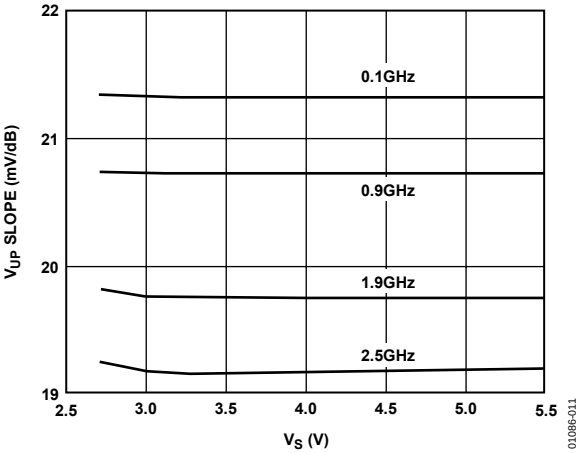

Figure 11. V_{UP} Slope vs. Supply Voltage

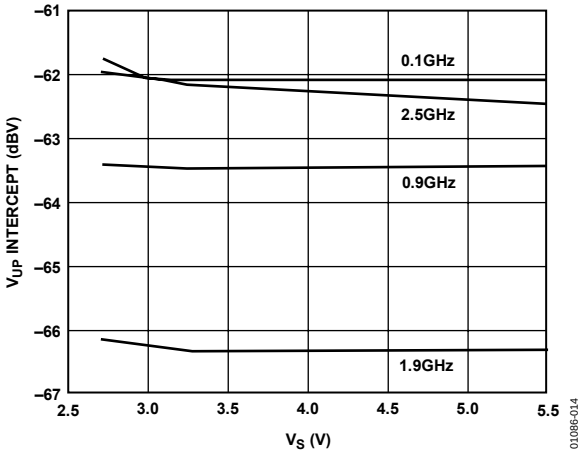

Figure 14. V_{UP} Intercept vs. Supply Voltage

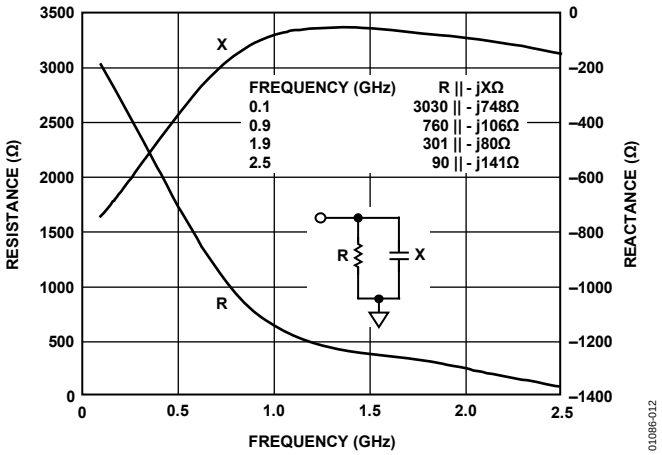

Figure 12. Input Impedance

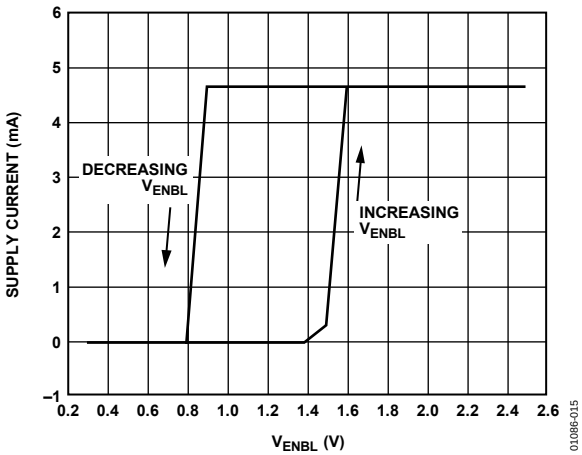

Figure 15. Supply Current vs. ENBL Voltage, V_S = 3 V

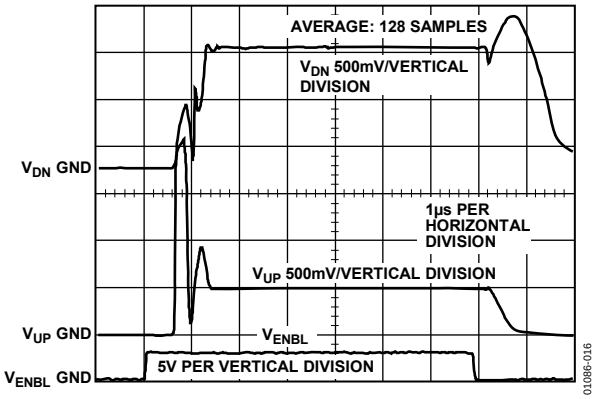

Figure 16. ENBL Response Time

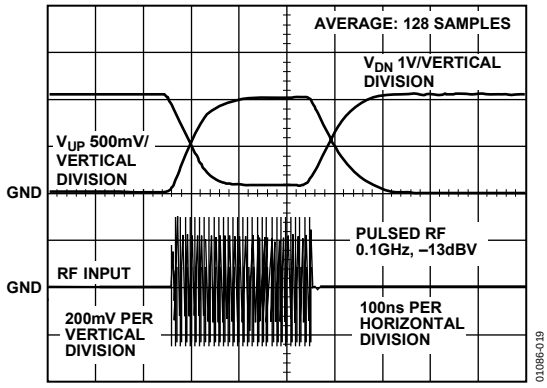

Figure 19. V_{UP} and V_{DN} Response Time, –40 dBm to 0 dBm

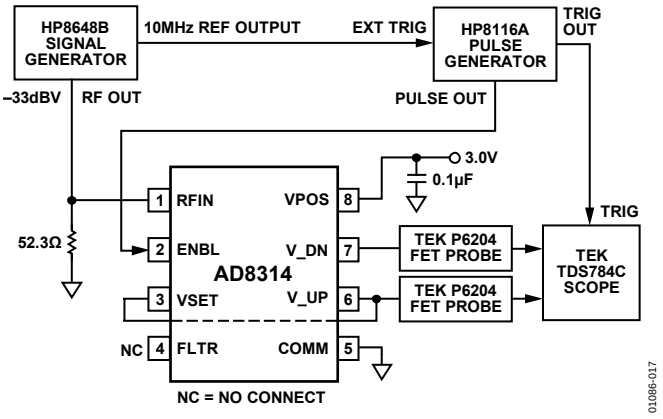

Figure 17. Test Setup for ENBL Response Time

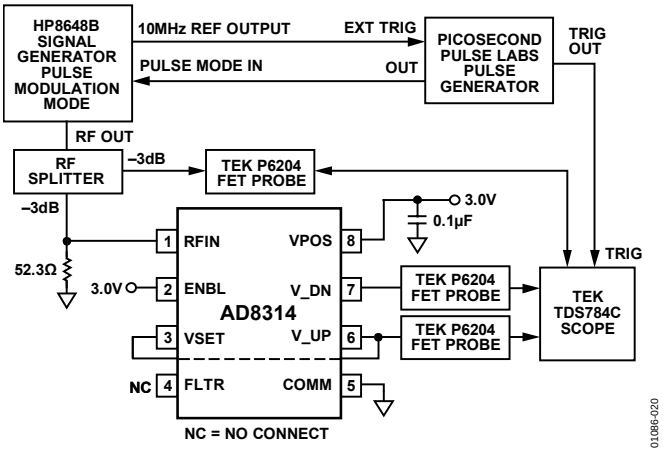

Figure 20. Text Setup for Pulse Response

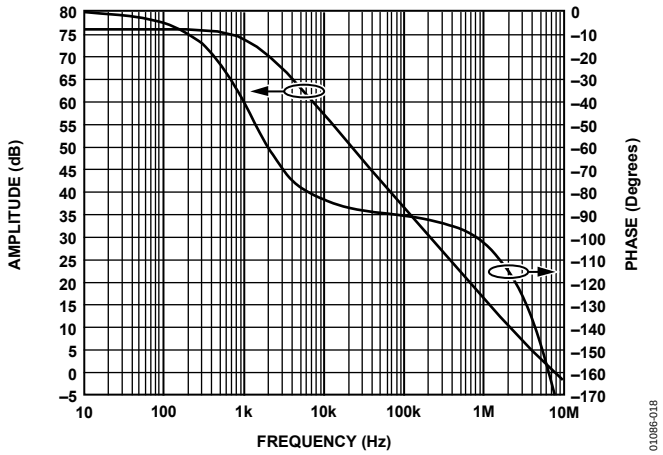

Figure 18. AC Response from VSET to V_DN

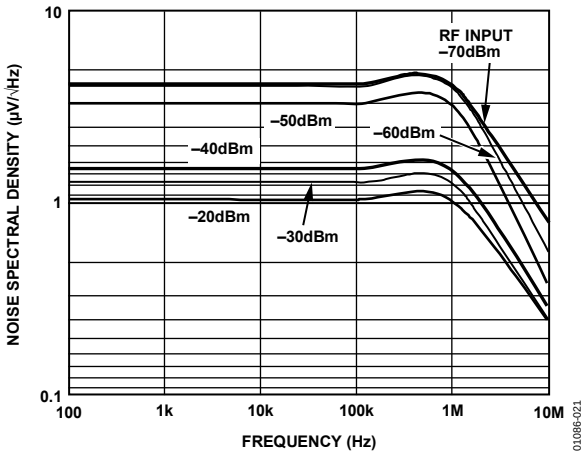

Figure 21. V_{DN} Noise Spectral Density

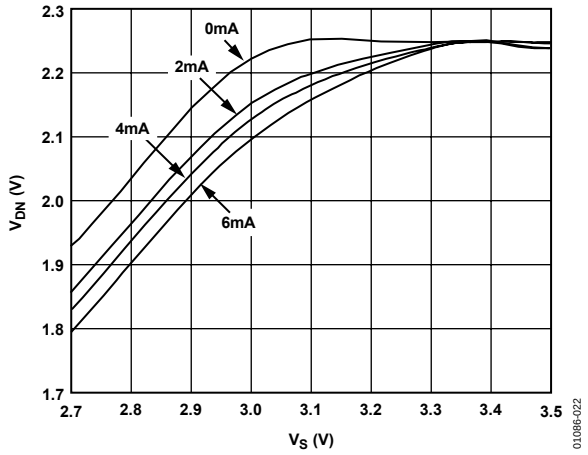

Figure 22. Maximum V_{DN} Voltage vs. V_S by Load Current

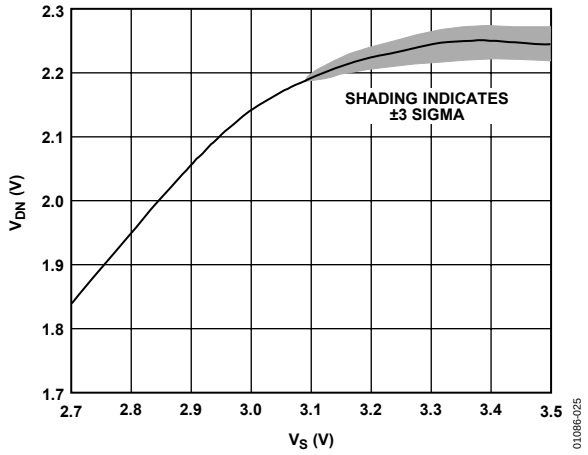

Figure 25. Maximum V_{DN} Voltage vs. V_S with 3 mA Load

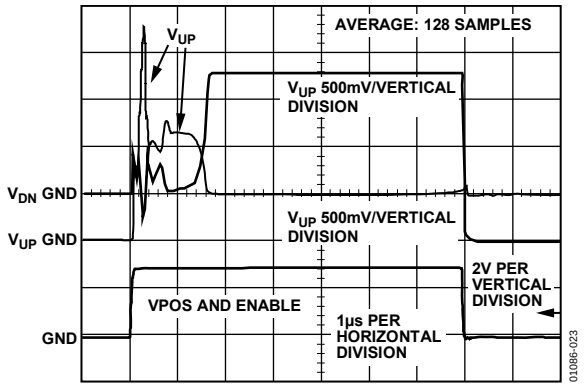

Figure 23. Power-On and Power-Off Response, Measurement Mode

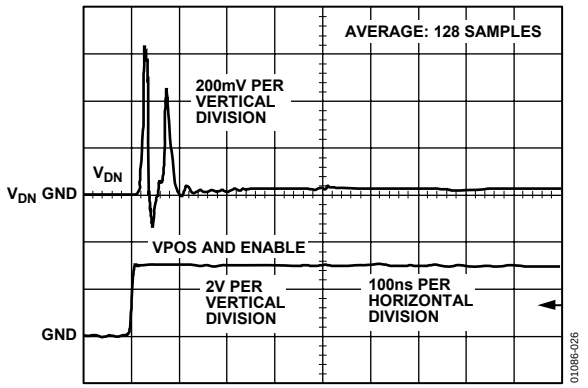

Figure 26. Power-On Response, V_{DN}, Controller Mode with VSET Held Low

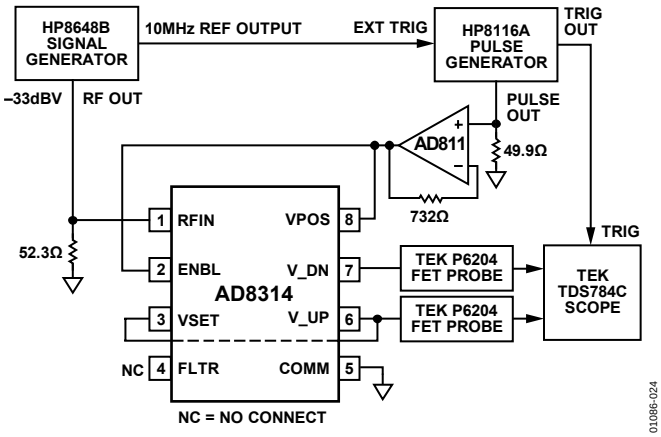

Figure 24. Test Setup for Power-On and Power-Off Response

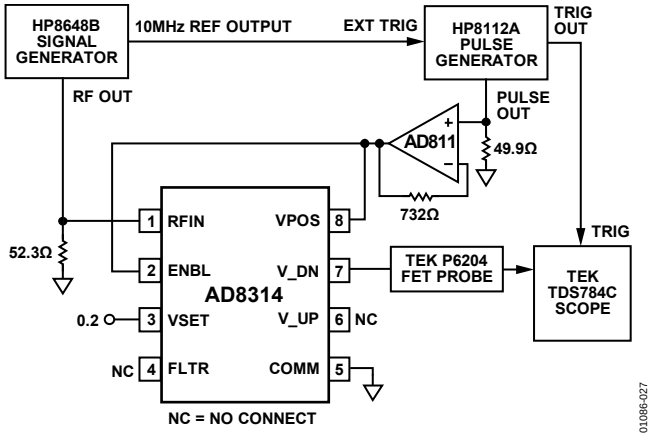

Figure 27. Test Setup for Power-On Response at V_DN Output, Controller Mode with VSET Pin Held Low

THEORY OF OPERATION

The AD8314 is a logarithmic amplifier (log amp) similar in design to the AD8313; further details about the structure and function can be found in the AD8313 data sheet and other log amps produced by ADI. Figure 28 shows the main features of the AD8314 in block schematic form.

The AD8314 combines two key functions needed for the measurement of signal level over a moderately wide dynamic range. First, it provides the amplification needed to respond to small signals, in a chain of four amplifier/limiter cells, each having a small signal gain of 10 dB and a bandwidth of approximately 3.5 GHz. At the output of each of these amplifier stages is a full-wave rectifier, essentially a square-law detector cell, that converts the RF signal voltages to a fluctuating current having an average value that increases with signal level. A further passive detector stage is added prior to the first stage. Therefore, there are five detectors, each separated by 10 dB, spanning some 50 dB of dynamic range. The overall accuracy at the extremes of this total range, viewed as the deviation from an ideal logarithmic response, that is, the law-conformance error, can be judged by reference to Figure 7, which shows that errors across the central 40 dB are moderate. Figure 5, Figure 6, Figure 8 through Figure 11, Figure 13, and Figure 14 show how the conformance to an ideal logarithmic function varies with supply voltage, temperature, and frequency.

The output of these detector cells is in the form of a differential current, making their summation a simple matter. It can easily be shown that such summation closely approximates a logarithmic function. This result is then converted to a voltage, at Pin V_UP, through a high-gain stage. In measurement modes, this output is connected back to a voltage-to-current (V-I) stage, in such a manner that V_UP is a logarithmic measure of the RF input voltage, with a slope and intercept controlled by the design. For a fixed termination resistance at the input of the AD8314, a given voltage corresponds to a certain power level.

However, in using this part, it must be understood that log amps do not fundamentally respond to power. It is for this reason the dBV is used (decibels above 1 V rms) rather than the commonly used metric of dBm. While the dBV scaling is fixed, independent of termination impedance, the corresponding power level is not. For example, 224 mV rms is always −13 dBV (with one further condition of an assumed sinusoidal waveform; see the Applications section for more information on the effect of waveform on logarithmic intercept), and it corresponds to a power of 0 dBm when the net impedance at the input is 50 Ω. When this impedance is altered to 200 Ω, the same voltage clearly represents a power level that is four times smaller ($P = V^2/R$), that is, −6 dBm. Note that dBV can be converted to dBm for the special case of a 50 Ω system by simply adding 13 dB (0 dBV is equivalent to +13 dBm).

Therefore, the external termination added prior to the AD8314 determines the effective power scaling. This often takes the form of a simple resistor (52.3 Ω provides a net 50 Ω input), but more elaborate matching networks can be used. This impedance determines the logarithmic intercept, the input power for which the output would cross the baseline (V_UP = zero) if the function were continuous for all values of input. Because this is never the case for a practical log amp, the intercept refers to the value obtained by the minimum-error straight-line fit to the actual graph of V_UP vs. PIN (more generally, V_{IN}). Again, keep in mind that the quoted values assume a sinusoidal (CW) signal. Where there is complex modulation, as in CDMA, the calibration of the power response needs to be adjusted accordingly. Where a true power (waveform-independent) response is needed, the use of an rms-responding detector, such as the AD8361, should be considered.

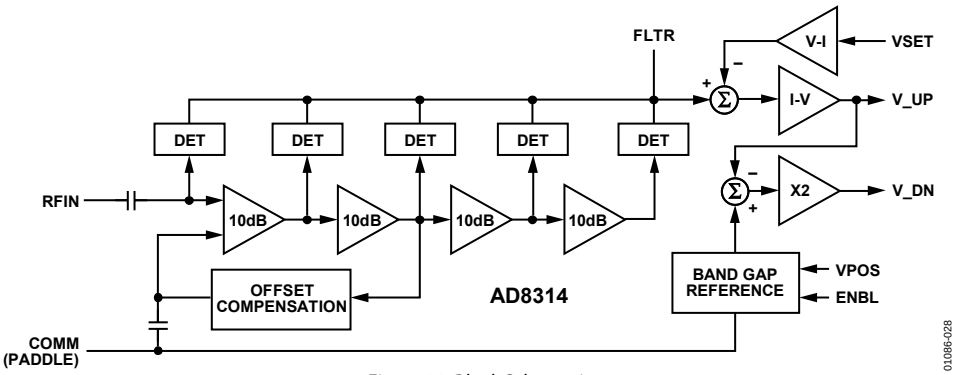

Figure 28. Block Schematic

Table 4. Typical Specifications at Selected Frequencies at 25°C (Mean and Σ)

	Slope (mV/dB)		Intercept (dBV)		±1 dB Dynamic Range[1] (dBV)			
					High Point		Low Point	
Frequency (GHz)	μ	σ	μ	σ	μ	σ	μ	σ
0.1	21.3	0.4	−62.2	0.4	−11.8	0.3	−59	0.5
0.9	20.7	0.4	−63.6	0.4	−13.8	0.3	−61.4	0.4
1.9	19.7	0.4	−66.3	0.4	−19	0.7	−64	0.6
2.5	19.2	0.4	−62.1	0.7	−16.4	1.7	−61	1.3

[1] Refer to Figure 32.

However, the logarithmic slope, the amount by which the output V_UP changes for each decibel of input change (voltage or power) is, in principle, independent of waveform or termination impedance. In practice, it usually falls off somewhat at higher frequencies, due to the declining gain of the amplifier stages and other effects in the detector cells. For the AD8314, the slope at low frequencies is nominally 21.3 mV/dB, falling almost linearly with frequency to about 19.2 mV/dB at 2.5 GHz. These values are sensibly independent of temperature (see Figure 10) and almost totally unaffected by the supply voltage from 2.7 V to 5.5 V (see Figure 11).

INVERTED OUTPUT

The second provision is the inclusion of an inverting amplifier to the output, for use in controller applications. Most power amplifiers require a gain-control bias that must decrease from a large positive value toward ground level as the power output is required to decrease. This control voltage, which appears at Pin V_DN, is not only of the opposite polarity to V_UP, but also needs to have an offset added to determine its most positive value when the power level (assumed to be monitored through a directional coupler at the output of the PA) is minimal.

The starting value of V_DN is nominally 2.25 V, and it falls on a slope of twice that of V_UP; in other words,−43 mV/dB. Figure 29 shows how this is achieved: the reference voltage that determines the maximum output is derived from the on-chip voltage reference and is substantially independent of the supply voltage or temperature. However, the full output cannot be attained for supply voltages under 3.3 V; Figure 22 shows this dependency. The relationship between V_UP and V_DN is shown in Figure 30.

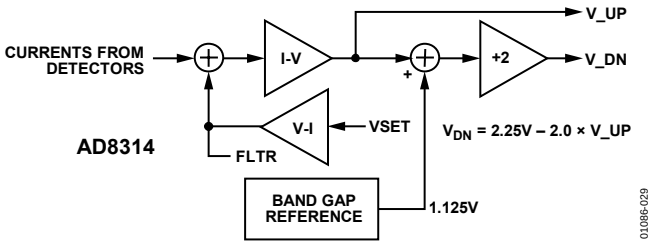

Figure 29. Output Interfaces

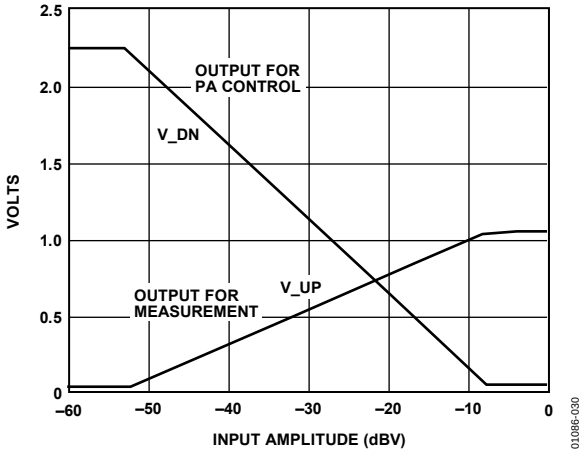

Figure 30. Showing V_UP and V_DN Relationship

APPLICATIONS

BASIC CONNECTIONS

Figure 31 shows connections for the basic measurement mode. A supply voltage of 2.7 V to 5.5 V is required. The supply to the VPOS pin should be decoupled with a low inductance 0.1 μF surface-mount ceramic capacitor. A series resistor of about 10 Ω can be added; this resistor slightly reduces the supply voltage to the AD8314 (maximum current into the VPOS pin is approximately 9 mA when V_DN is delivering 5 mA). Its use should be avoided in applications where the power supply voltage is very low (that is, 2.7 V). A series inductor provides similar power supply filtering with minimal drop in supply voltage.

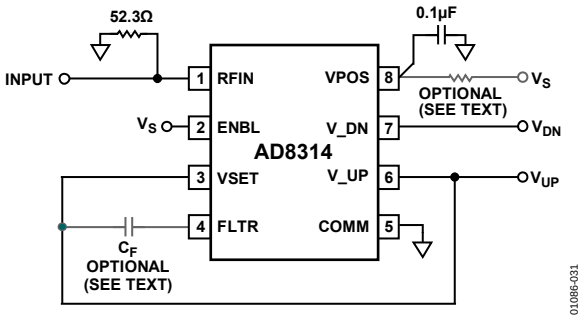

Figure 31. Basic Connections for Operation in Measurement Mode

The ENBL pin is here connected to VPOS. The AD8314 can be disabled by pulling this pin to ground when the chip current is reduced to about 20 μA from its normal value of 4.5 mA. The logic threshold is around $+V_S/2$ and the enable function occurs in about 1.5 μs. Note, however, further settling time is generally needed at low input levels.

The AD8314 has an internal input coupling capacitor. This eliminates the need for external ac coupling. A broadband input match is achieved in this example by connecting a 52.3 Ω resistor between RFIN and ground. This resistance combines with the internal input impedance of approximately 3 kΩ to give an overall broadband input resistance of 50 Ω. Several other coupling methods are possible, which are described in the Input Coupling Options section.

The measurement mode is selected by connecting VSET to V_UP, which establishes a feedback path and sets the logarithmic slope to its nominal value. The peak voltage range of the measurement extends from −58 dBV to −13 dBV at 0.9 GHz, and only slightly less at higher frequencies up to 2.5 GHz. Therefore, using the 50 Ω termination, the equivalent power range is −45 dBm to 0 dBm. At a slope of 21.5 mV/dB, this would amount to an output span of 967 mV. Figure 32 shows the transfer function for V_UP at a supply voltage of 3 V and input frequency of 0.9 GHz.

V_DN, which is generally not used when the AD8314 is used in measurement mode, is essentially an inverted version of V_UP. The voltage on V_UP and V_DN are related by

$$V_{DN} = 2.25\ \text{V} - 2\ V_{UP}$$

While V_DN can deliver up to 6 mA, the load resistance on V_UP should not be lower than 10 kΩ in order that the full-scale output of 1 V can be generated with the limited available current of 200 μA maximum. Figure 32 shows the logarithmic conformance under the same conditions.

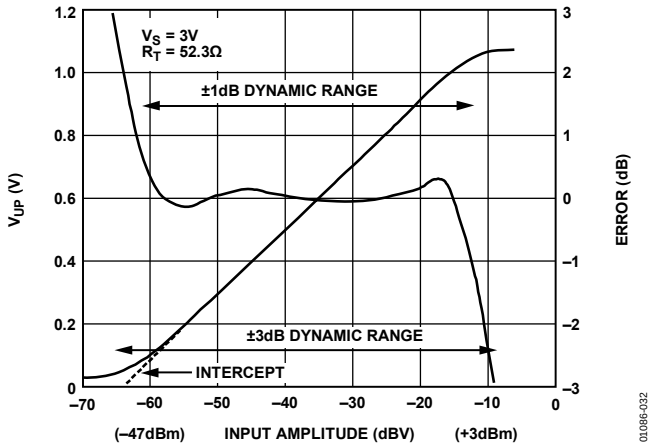

Figure 32. V_{UP} and Log Conformance Error vs. Input Level vs. Input Level at 900 MHz

TRANSFER FUNCTION IN TERMS OF SLOPE AND INTERCEPT

The transfer function of the AD8314 is characterized in terms of its slope and intercept. The logarithmic slope is defined as the change in the RSSI output voltage for a 1 dB change at the input. For the AD8314, slope is nominally 21.5 mV/dB. Therefore, a 10 dB change at the input results in a change at the output of approximately 215 mV. Log conformance plot, Figure 32, shows the range over which the device maintains its constant slope. The dynamic range can be defined as the range over which the error remains within a certain band, usually ±1 dB or ±3 dB. In Figure 32 for example, the ±1 dB dynamic range is approximately 50 dB (from −13 dBV to −63 dBV).

The intercept is the point at which the extrapolated linear response would intersect the horizontal axis (see Figure 32). Using the slope and intercept, the output voltage can be calculated for any input level within the specified input range by

$$V_{UP} = V_{SLOPE} \times (P_{IN} - P_O)$$

where:

V_{UP} is the demodulated and filtered RSSI output.

V_{SLOPE} is the logarithmic slope, expressed in V/dB.

P_{IN} is the input signal, expressed in decibels relative to some reference level (either dBm or dBV in this case).

P_O is the logarithmic intercept, expressed in decibels relative to the same reference level.

For example, at an input level of −40 dBV (−27 dBm), the output voltage is

$$V_{OUT} = 0.020 \text{ V/dB} \times [-40 \text{ dBV} - (-63 \text{ dBV})] = 0.46 \text{ V}$$

dBV VS. dBm

The most widely used convention in RF systems is to specify power in dBm, that is, decibels above 1 mW in 50 Ω. Specification of log amp input levels in terms of power is strictly a concession to popular convention; they do not respond to power (tacitly power absorbed at the input), but to the input voltage. The use of dBV, defined as decibels with respect to a 1 V rms sine wave, is more precise, although this is still not unambiguous because waveform is also involved in the response of a log amp, which, for a complex input (such as a CDMA signal), does not follow the rms value exactly. Since most users specify RF signals in terms of power (more specifically, in dBm/50 Ω), both dBV and dBm are used in specifying the performance of the AD8314 showing equivalent dBm levels for the special case of a 50 Ω environment. Values in dBV are converted to dBm re 50 Ω by adding 13.

FILTER CAPACITOR

The video bandwidth of both V_UP and V_DN is approximately 3.5 MHz. In CW applications where the input frequency is much higher than this, no further filtering of the demodulated signal is required. Where there is a low frequency modulation of the carrier amplitude, however, the low-pass corner must be reduced by the addition of an external filter capacitor, C_F (see Figure 31). The video bandwidth is related to C_F by

$$Video\ Bandwidth = \frac{1}{2\pi \times 13\ \text{k}\Omega \times (3.5\ \text{pF} + C_F)}$$

OPERATING IN CONTROLLER MODE

Figure 33 shows the basic connections for operation in the controller mode, and Figure 34 shows a block diagram of a typical controller mode application. The feedback from V_UP to VSET is broken and the desired setpoint voltage is applied to VSET from the controlling source (often this is a DAC). V_{DN} rails high (2.2 V on a 3.3 V supply, and 1.9 V on a 2.7 V supply) when the applied power is less than the value corresponding to the setpoint voltage. When the input power slightly exceeds this value, V_{DN} would, in the absence of the loop via the power amplifier gain pin, decrease rapidly toward ground. In the closed loop, however, the reduction in V_{DN} causes the power amplifier to reduce its output. This restores a balance between the actual power level sensed at the input of the AD8314 and the demanded value determined by the setpoint. This assumes that the gain control sense of the variable gain element is positive, that is, an increasing voltage from V_DN tends to increase gain. The output swing and current sourcing capability of V_DN are shown in Figure 22 and Figure 25.

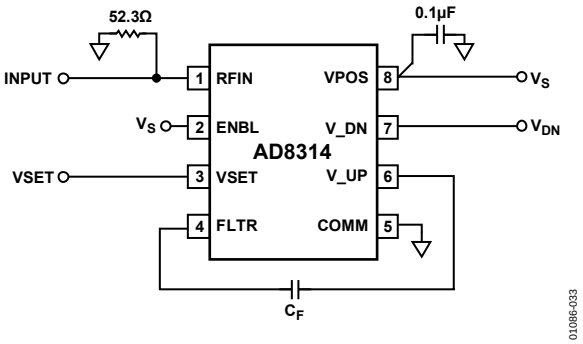

Figure 33. Basic Connections for Operation in Controller Mode

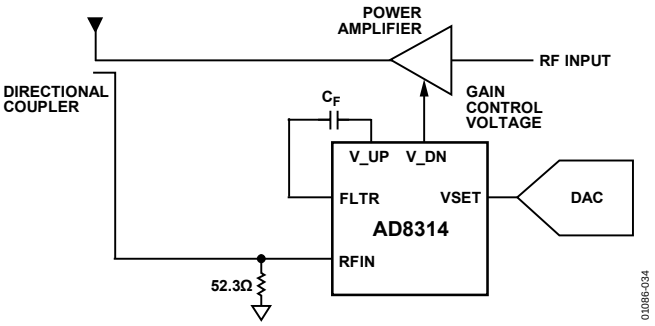

Figure 34. Typical Controller Mode Application

The relationship between the input level and the setpoint voltage follows from the nominal transfer function of the device (V_{UP} vs. input amplitude, see Figure 4). For example, a voltage of 1 V on VSET demands a power level of 0 dBm at RFIN. The corresponding power level at the output of the power amplifier is greater than this amount due to the attenuation through the directional coupler.

When connected in a PA control loop, as shown in Figure 34, the voltage V_{UP} is not explicitly used but is implicated in again setting up the required averaging time, by choice of C_F. However, now the effective loop response time is a much more complicated function of the PA's gain-control characteristics, which are very nonlinear. A complete solution requires specific knowledge of the power amplifier.

The transient response of this control loop is determined by the filter capacitor, C_F. When this is large, the loop is unconditionally stable (by virtue of the dominant pole generated by this capacitor), but the response is sluggish. The minimum value ensuring stability should be used, requiring full attention to the particulars of the power amplifier control function. Because this is invariably nonlinear, the choice must be made for the worst-case condition, which usually corresponds to the smallest output from the PA, where the gain function is steepest. In practice, an improvement in loop dynamics can often be achieved by adding a response zero, formed by a resistor in series with C_F.

POWER-ON AND ENABLE GLITCH

As previously mentioned, the AD8314 can be put into a low power mode by pulling the ENBL pin to ground. This reduces the quiescent current from 4.5 mA to 20 μA. Alternatively, the supply can be turned off to eliminate the quiescent current. Figure 16 and Figure 26 show the behavior of the V_DN output under these two conditions (in Figure 26, ENBL is tied to VPOS). The glitch that results in both cases can be reduced by loading the V_DN output.

INPUT COUPLING OPTIONS

The internal 5 pF coupling capacitor of the AD8314, along with the low frequency input impedance of 3 kΩ, gives a high-pass input corner frequency of approximately 16 MHz. This sets the minimum operating frequency. Figure 35 through Figure 37 show three options for input coupling. A broadband resistive match can be implemented by connecting a shunt resistor to ground at RFIN (see Figure 35). This 52.3 Ω resistor (other values can also be used to select different overall input impedances) combines with the input impedance of the AD8314 (3 kΩ||2 pF) to give a broadband input impedance of 50 Ω. While the input resistance and capacitance (CIN and RIN) varies by approximately ±20% from device to device, the dominance of the external shunt resistor means that the variation in the overall input impedance is close to the tolerance of the external resistor.

At frequencies above 2 GHz, the input impedance drops below 250 Ω (see Figure 12), so it is appropriate to use a larger value shunt resistor. This value is calculated by plotting the input impedance (resistance and capacitance) on a Smith Chart and choosing the best value shunt resistor to bring the input impedance closest to the center of the chart. At 2.5 GHz, a shunt resistor of 165 Ω is recommended.

A reactive match can also be implemented as shown in Figure 36. This is not recommended at low frequencies as device tolerances dramatically varies the quality of the match because of the large input resistance. For low frequencies, Figure 35 or Figure 37 is recommended.

In Figure 36, the matching components are drawn as general reactances. Depending on the frequency, the input impedance at that frequency, and the availability of standard value components, either a capacitor or an inductor is used. As in the previous case, the input impedance at a particular frequency is plotted on a Smith Chart and matching components are chosen (shunt or Series L, shunt or Series C) to move the impedance to the center of the chart. Table 5 gives standard component values for some popular frequencies. Matching components for other frequencies can be calculated using the input resistance and reactance data over frequency, which is given in Figure 12. Note that the reactance is plotted as though it appears in parallel with the input impedance (which it does because the reactance is primarily due to input capacitance).

The impedance matching characteristics of a reactive matching network provide voltage gain ahead of the AD8314; this increases the device sensitivity (see Table 5). The voltage gain is calculated by

$$Voltage\ Gain_{dB} = 20 \log_{10} \sqrt{\frac{R2}{R1}}$$

where *R2* is the input impedance of the AD8314, and *R1* is the source impedance to which the AD8314 is being matched. Note that this gain is only achieved for a perfect match. Component tolerances and the use of standard values tend to reduce gain.

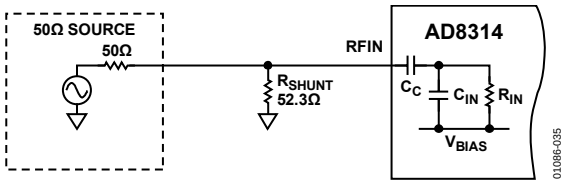

Figure 35. Broadband Resistive

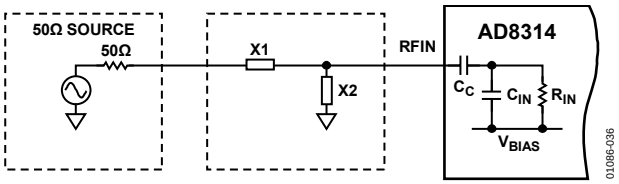

Figure 36. Narrowband Reactive

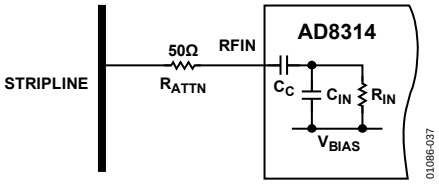

Figure 37. Series Attenuation

Figure 37 shows a third method for coupling the input signal into the AD8314, applicable in applications where the input signal is larger than the input range of the log amp. A series resistor, connected to the RF source, combines with the input impedance of the AD8314 to resistively divide the input signal being applied to the input. This has the advantage of very little power being tapped off in RF power transmission applications.

Table 5. X1 and X2 Recommended Components in Figure 36

Frequency (GHz)	X1	X2	Voltage Gain (dB)
0.1	Short	52.3 Ω	
0.9	33 nH	39 nH	11.8
1.9	10 nH	15 nH	7.8
2.5	1.5 pF	3.9 nH	2.55

INCREASING THE LOGARITHMIC SLOPE IN MEASUREMENT MODE

The nominal logarithmic slope of 21.5 mV/dB (see Figure 10 for the variation of slope with frequency) can be increased to an arbitrarily high value by attenuating the signal between V_UP and VSET, as shown in Figure 38. The ratio R1/R2 is set by

$$R1/R2 = \left(\frac{New\ Slope}{Original\ Slope}\right) - 1$$

In the example shown, two 5 kΩ resistors combine to change the slope at 1900 MHz from 20 mV/dB to 40 mV/dB. The slope can be increased to higher levels. This, however, reduces the usable dynamic range of the device.

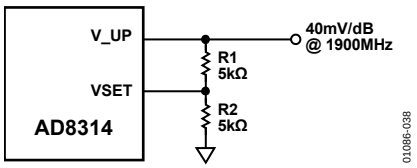

Figure 38. Increasing the Output Slope

EFFECT OF WAVEFORM TYPE ON INTERCEPT

Although specified for input levels in dBm (dB relative to 1 mW), the AD8314 fundamentally responds to voltage and not to power. A direct consequence of this characteristic is that input signals of equal rms power but differing crest factors produces different results at the log amp's output.

The effect of differing signal waveforms is to shift the effective value of the intercept upwards or downwards. Graphically, this looks like a vertical shift in the log amp's transfer function. The logarithmic slope, however, is not affected. For example, consider the case of the AD8314 being alternately fed by an unmodulated sine wave and by a single CDMA channel of the same rms power. The AD8314's output voltage differs by the equivalent of 3.55 dB (70 mV) over the complete dynamic range of the device (the output for a CDMA input being lower).

Table 6 shows the correction factors that should be applied to measure the rms signal strength of various signal types. A sine wave input is used as a reference. To measure the rms power of a square wave, for example, the mV equivalent of the dB value given in the table (20 mV/dB times 3.01 dB) should be subtracted from the output voltage of the AD8314.

Table 6. Shift in AD8314 Output for Signals with Differing Crest Factors

Signal Type	Correction Factor (Add to Measured Input Level)
Sine Wave	0 dB
Square Wave	−3.01 dB
GSM Channel (All Time Slots On)	+0.55 dB
CDMA Channel (Forward Link, 9 Channels On)	+3.55 dB
CDMA Channel (Reverse Link)	+0.5 dB
PDC Channel (All Time Slots On)	+0.58 dB

MOBILE HANDSET POWER CONTROL EXAMPLES

Figure 39 shows a complete power amplifier control circuit for a dual mode handset. This circuit is applicable to any dual mode handset using TDMA or CDMA technologies. The PF08107B (Hitachi) is driven by a nominal power level of 3 dBm. Some of the output power from the PA is coupled off using an LDC15D190A0007A (Murata) directional coupler. This has a coupling factor of approximately 19 dB for its lower frequency band (897.5 MHz ± 17.5 MHz) and 14 dB for its upper band (1747.5 MHz ± 37.5 MHz) and an insertion loss of 0.38 dB and 0.45 dB, respectively. Because the PF08107B transmits a maximum power level of 35 dBm, additional attenuation of 15 dB is required before the coupled signal is applied to the AD8314.

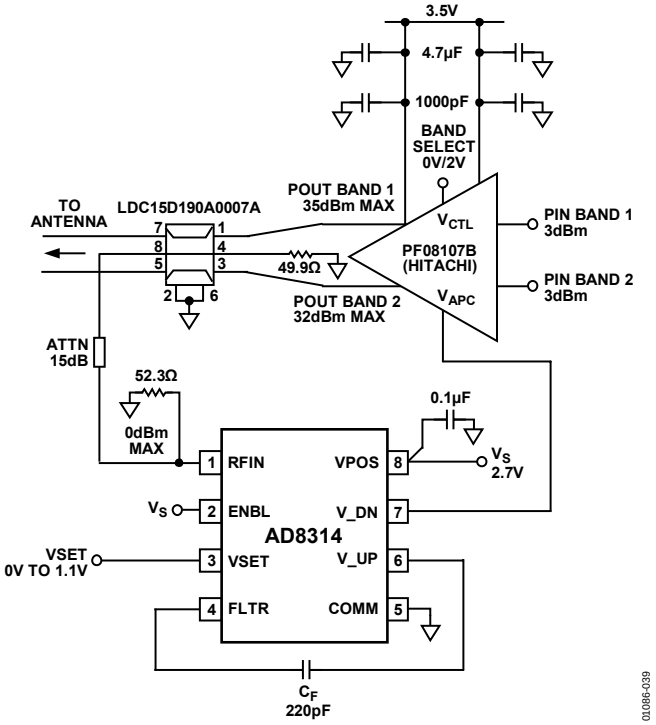

Figure 39. A Dual Mode Power Amplifier Control Circuit

The setpoint voltage, in the 0 V to 1.1 V range, is applied to the VSET pin of the AD8314. This is typically supplied by a DAC. This voltage is compared to the input level of the AD8314. Any imbalance between VSET and the RF input level is corrected by V_DN, which drives the V_{APC} (gain control) of the power amplifier. V_DN reaches a maximum value of approximately 1.9 V on a 2.7 V supply (this is higher for higher supply voltages) while delivering approximately 3 mA to the V_{APC} input.

A filter capacitor (C_F) must be used to stabilize the loop. The choice of C_F depends to a large degree on the gain control dynamics of the power amplifier, something that is frequently characterized poorly, so some trial and error can be necessary. In this example, a 220 pF capacitor gives the loop sufficient speed to follow the GSM and DCS1800 time slot ramping profiles, while still having a stable, critically damped response.

Figure 40 shows the relationship between the setpoint voltage, V_{SET} and output power at 0.9 GHz. The overall gain control function is linear in dB for a dynamic range of over 40 dB.

Figure 41 shows a similar circuit for a single band handset power amplifier. The BGY241 (Phillips) is driven by a nominal power level of 0 dBm. A 20 dB directional coupler, DC09-73 (Alpha), is used to couple the signal in this case. Figure 42 shows the relationship between the control voltage and the output power at 0.9 GHz.

In both of these examples, noise on the V_DN pin can be reduced by placing a simple RC low-pass filter between V_{DN} and the gain control pin of the power amplifier. However, the value of the resistor should be kept low to minimize the voltage drop across it due to the dc current flowing into the gain control input.

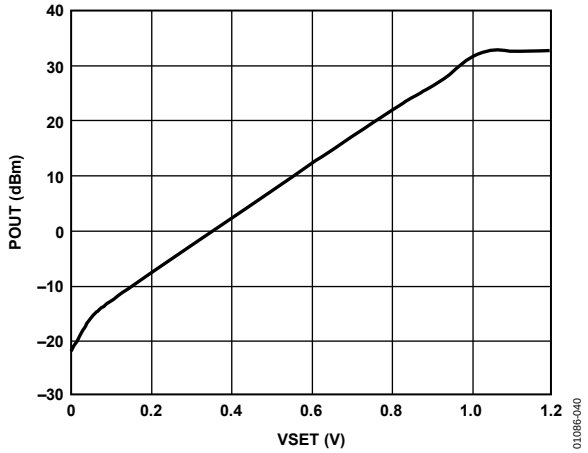

Figure 40. POUT vs. VSET at 0.9 GHz for Dual Mode Handset Power Amplifier Application

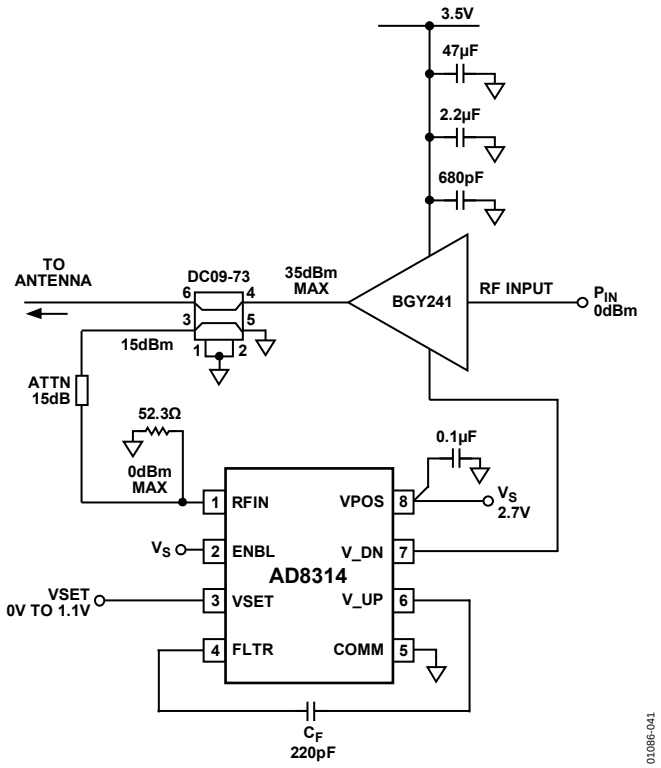

Figure 41. A Single Mode Power Amplifier Control Circuit

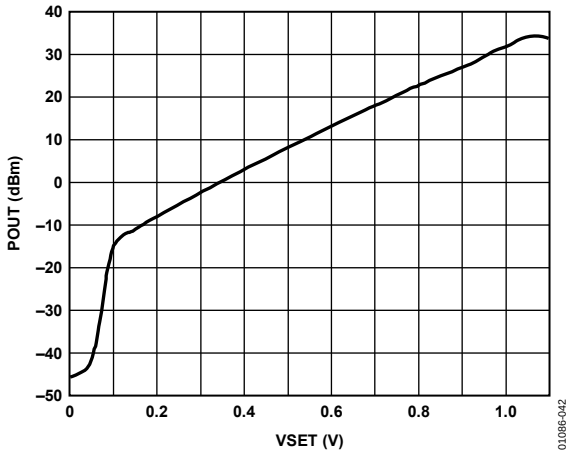

Figure 42. POUT vs. VSET at 0.9 GHz for Single Mode Handset

OPERATION AT 2.7 GHz

While the AD8314 is specified to operate at frequencies up to 2.5 GHz, it works at higher frequencies, although it does exhibit slightly higher output voltage temperature drift. Figure 43 shows the transfer function of a typical device at 2.7 GHz, at ambient as well as hot and cold temperatures.

Figure 44 shows the transfer function of the AD8314 when driven by both an unmodulated sine wave and a 64 QAM signal. As previously discussed, the higher peak-to-average ratio of the 64 QAM signal causes an increase in the intercept.

In this case, the intercept increases by approximately 1.5 dB, causing the overall transfer function to drop by the same amount. For precision operation, the AD8314 should be calibrated for each signal type that is driving it.

USING THE LFCSP PACKAGE

On the underside of the LFCSP package, there is an exposed, compressed paddle. This paddle is internally connected to the chip's ground. While the paddle can be connected to the printed circuit board's ground plane, there is no thermal or electrical requirement to do this.

EVALUATION BOARD

Figure 45 shows the schematic of the AD8314 MSOP evaluation board. The layout and silkscreen of the component side are shown in Figure 46 and Figure 47. An evaluation board is also available for the LFCSP package. (For exact part numbers, see the Ordering Guide.) Apart from the slightly smaller device footprint, the LFCSP evaluation board is identical to the MSOP board. The board is powered by a single supply in the 2.7 V to 5.5 V range. The power supply is decoupled by a single 0.1 μF capacitor. Additional decoupling, in the form of a series resistor or inductor in R9, can also be added. Table 7 details the various configuration options of the evaluation board.

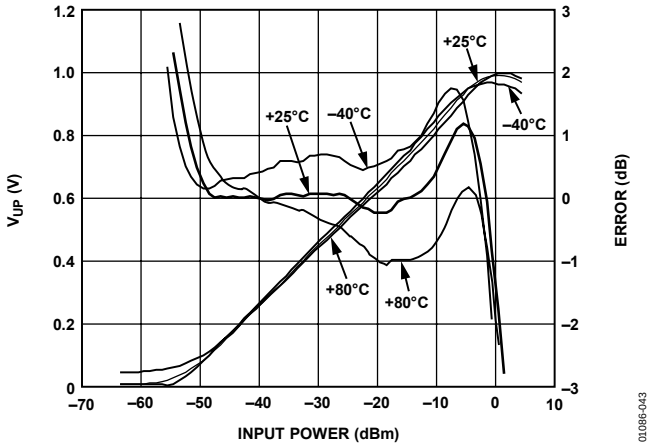

Figure 43. Operating at 2.7 GHz

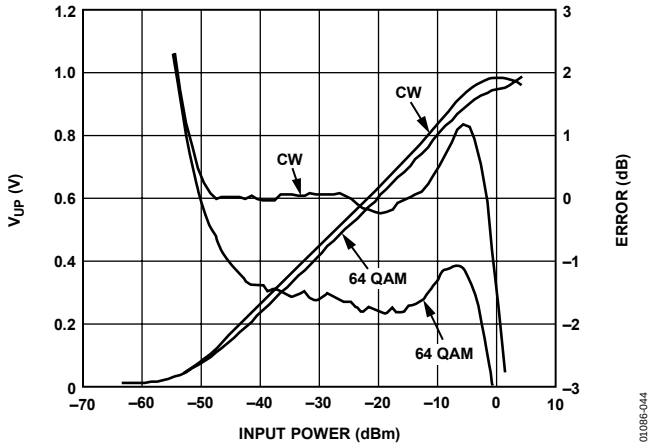

Figure 44. Shift in Transfer Function due to 64 QAM

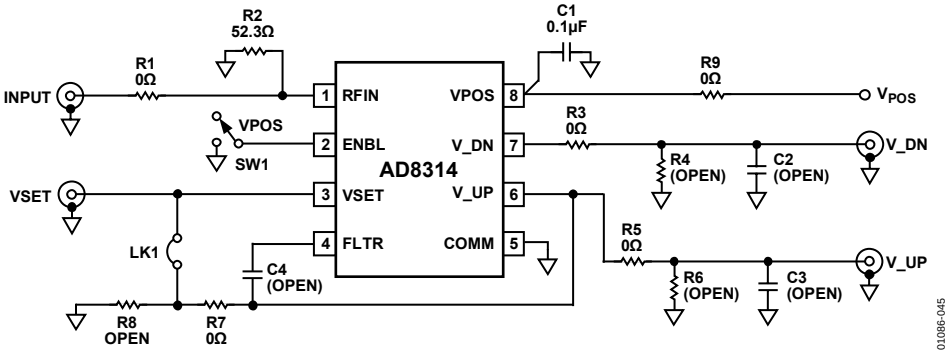

Figure 45. Evaluation Board Schematic

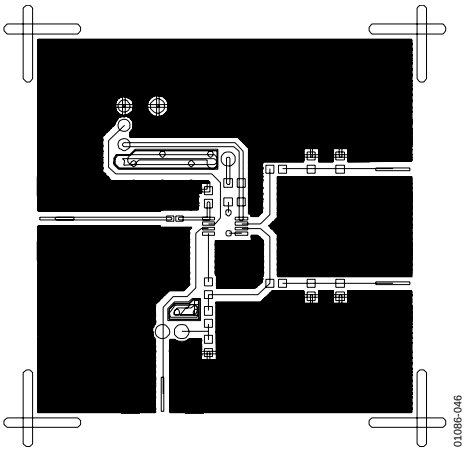

Figure 46. Layout of Component Side (MSOP)

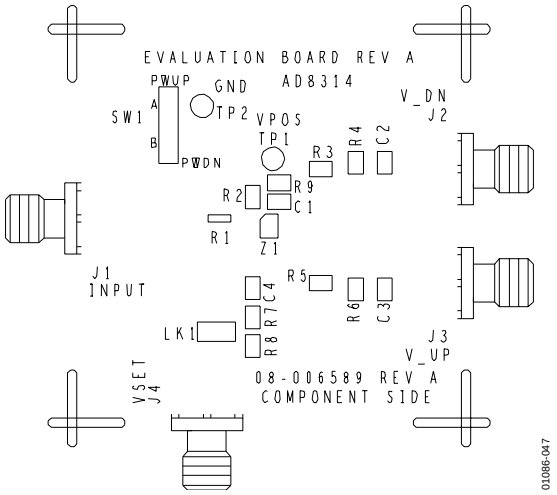

Figure 47. Silkscreen of Component Side (MSOP)

Table 7. Evaluation Board Configuration Options

Component	Function	Default Condition
TP1, TP2	Supply and Ground Vector Pins.	Not Applicable
SW1	Device Enable: When in Position A, the ENBL pin is connected to $+V_S$ and the AD8314 is in operating mode. In Position B, the ENBL pin is grounded, putting the device in power-down mode.	SW1 = A
R1, R2	Input Interface. The 52.3 Ω resistor in Position R2 combines with the AD8314's internal input impedance to give a broadband input impedance of around 50 Ω. A reactive match can be implemented by replacing R2 with an inductor and R1 (0 Ω) with a capacitor. Note that the AD8314's RF input is internally ac-coupled.	R2 = 52.3 Ω (Size 0603) R1 = 0 Ω (Size 0402)
R3, R4, C2, R5, R6, C3	Output Interface. R4, C2, R6, and C3 can be used to check the response of V_UP and V_DN to capacitive and resistive loading. R3/R4 and R5/R6 can be used to reduce the slope of V_UP and V_DN.	R4 = C2 = R6 = C3 = Open (Size 0603) R3= R5 = 0 Ω (Size 0603)
C1, R9	Power Supply Decoupling. The nominal supply decoupling consists of a 0.1 µF capacitor (C1). A series inductor or small resistor can be placed in R9 for additional decoupling.	C1 = 0.1 µF (Size 0603) R9 = 0 Ω (Size 0603)
C4	Filter Capacitor. The response time of V_UP and V_DN can be modified by placing a capacitor between FILTR and V_UP.	C4 = Open (Size 0603)
R7, R8	Slope Adjust. By installing resistors in R7 and R8, the nominal slope of 20 mV/dB can be increased. See Increasing the Logarithmic Slope in Measurement Mode for more details.	R7 = 0 Ω (Size 0603) R8 = Open (Size 0603)
LK1	Measurement/Controller Mode. LK1 shorts V_UP to VSET, placing the AD8314 in measurement mode. Removing LK1 places the AD8314 in controller mode.	LK1 = Installed

OUTLINE DIMENSIONS

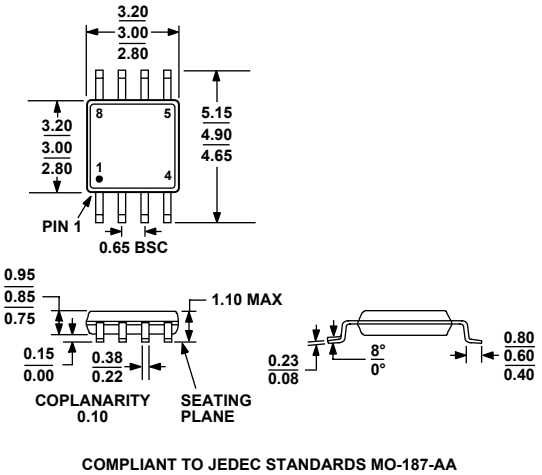

Figure 48. 8-Lead Mini Small Outline Package [MSOP] (RM-8)
Dimensions shown in millimeters

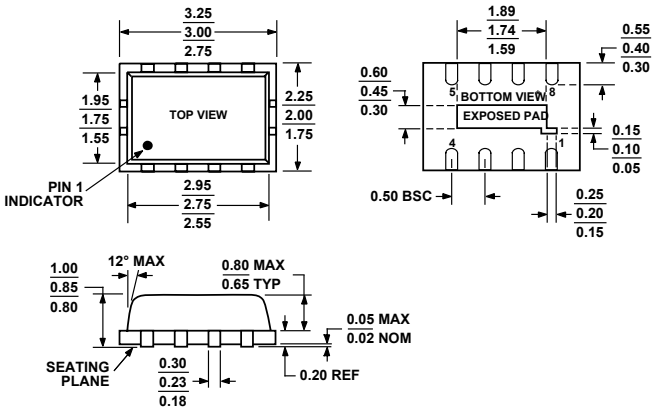

Figure 49. 8-Lead Lead Frame Chip Scale Package [LFCSP_VD] 2 mm × 3 mm Body, Very Thin, Dual Lead (CP-8-1)
Dimensions shown in millimeters

ORDERING GUIDE

Model	Temperature Range	Package Description	Package Option	Branding	Ordering Quantity
AD8314ARM	−40°C to +85°C	8-Lead MSOP, Tube	RM-8	J5A	50
AD8314ARM-REEL	−40°C to +85°C	8-Lead MSOP, 13" Tape and Reel	RM-8	J5A	3,000
AD8314ARM-REEL7	−40°C to +85°C	8-Lead MSOP, 7" Tape and Reel	RM-8	J5A	1,000
AD8314ARMZ[1]	−40°C to +85°C	8-Lead MSOP, Tube	RM-8	J5A#	50
AD8314ARMZ-REEL[1]	−40°C to +85°C	8-Lead MSOP, 13" Tape and Reel	RM-8	J5A#	3,000
AD8314ARMZ-REEL7[1]	−40°C to +85°C	8-Lead MSOP, 7" Tape and Reel	RM-8	J5A#	1,000
AD8314-EVAL		MSOP Evaluation Board			
AD8314ACP-REEL	−40°C to +85°C	8-Lead LFCSP_VD, 13" Tape and Reel	CP-8-1	J5	10,000
AD8314ACP-REEL7	−40°C to +85°C	8-Lead LFCSP_VD, 7" Tape and Reel	CP-8-1	J5	3,000
AD8314ACP-WP	−40°C to +85°C	8-Lead LFCSP_VD, Waffle Pack	CP-8-1	J5	50
AD8314ACPZ-REEL[1]	−40°C to +85°C	8-Lead LFCSP_VD, 13" Tape and Reel	CP-8-1	0F	10,000
AD8314ACPZ-RL7[1]	−40°C to +85°C	8-Lead LFCSP_VD, 7" Tape and Reel	CP-8-1	0F	3,000
AD8314ACP-EVAL		LFCSP_VD Evaluation Board			

[1] Z = Pb-free part, # denotes lead-free product may be top or bottom marked.

©2006 Analog Devices, Inc. All rights reserved. Trademarks and registered trademarks are the property of their respective owners.
C01086-0-5/06(B)

О компании

ООО "ТрейдЭлектроникс" - это оперативные поставки широкого спектра электронных компонентов отечественного и импортного производства напрямую от производителей и с крупнейших мировых складов. Реализуемая нашей компанией продукция насчитывает более полумиллиона наименований.

Благодаря этому наша компания предлагает к поставке практически не ограниченный ассортимент компонентов как оптовыми, мелкооптовыми партиями, так и в розницу.

Наличие собственной эффективной системы логистики обеспечивает надежную поставку продукции по конкурентным ценам в точно указанные сроки.

Срок поставки со стоков в **Европе и Америке – от 3 до 14 дней.**

Срок поставки из **Азии – от 10 дней.**

Благодаря развитой сети поставщиков, помогаем в поиске и приобретении экзотичных или снятых с производства компонентов.

Предоставляем спец цены на элементы для создания инженерных сэмплов.

Упорный труд, качественный результат дают нам право быть уверенными в себе и надежными для наших клиентов.

Наша компания это:

- Гарантия качества поставляемой продукции
- Широкий ассортимент
- Минимальные сроки поставок
- Техническая поддержка
- Подбор комплектации
- Индивидуальный подход
- Гибкое ценообразование

Наша организация особенно сильна в поставках модулей, микросхем, пассивных компонентов, ксайленсах (XC), EPF, EPM и силовой электроники.

Большой выбор предлагаемой продукции, различные виды оплаты и доставки, позволят Вам сэкономить время и получить максимум выгоды от сотрудничества с нами!

Trade Electronics.ru

гарантия бесперебойности производства и качества выпускаемой продукции

Перечень производителей, продукцию которых мы поставляем на российский рынок

AMD
ANALOG DEVICES
BOURNS
Coilcraft
élantec Semiconductor, Inc.
HARRIS
Infineon
JRC
MICREL
MOTOROLA
nichicon
PHILIPS
ROHM
SGS-THOMSON
Sipex
TAIYO YUDEN
TOKO
ZILOG
Winbond
Allegro
ATMEL
BURR - BROWN
EXAR
HITACHI
intel
Lattice
muRata
OKI
QUALCOMM
SAMSUNG
SHARP
SONY
TDK
TOSHIBA
KYOCERA
ALTERA
AVX
CITILYST
CYPRESS
FAIRCHILD SEMICONDUCTOR
HOLTEK
International IOR Rectifier
LINEAR TECHNOLOGY
MITSUBISHI
National Semiconductor
ON Semiconductor
REALTEK
SANYO
SHINDENGEN
SGS
TECCOR
TUNDRA
XILINX
Amphenol
Bay Linear
CIRRUS LOGIC
DALLAS
FUJITSU
IDT
intersil
MAXIM
molex
NEC
Panasonic
RENESAS
SII
SIEMENS
ST
Texas Instruments
VISHAY
ZETEX SEMICONDUCTORS

Trade Electronics.ru

гарантия бесперебойности производства и качества выпускаемой продукции

С удовольствием будем прорабатывать для Вас поставки всех необходимых компонентов по текущим запросам для скорейшего выявления групп элементов, по которым сотрудничество именно с нашей компанией будет для Вас максимально выгодным!

С уважением,

Менеджер отдела продаж ООО

«Трейд Электроникс»

Шишлаков Евгений

8 (495)668-30-28 доб 169

manager28@tradeelectronics.ru

http://www.tradeelectronics.ru/