bq2204A

X4 SRAM Nonvolatile Controller Unit

Features

- Power monitoring and switching for 3-volt battery-backup applications
- Write-protect control
- 2-input decoder for control of up to 4 banks of SRAM
- 3-volt primary cell inputs
- Less than 10ns chip-enable propagation delay
- 5% or 10% supply operation

General Description

The CMOS bq2204A SRAM Nonvolatile Controller Unit provides all necessary functions for converting up to four banks of standard CMOS SRAM into nonvolatile read/write memory.

A precision comparator monitors the 5V V_{CC} input for an out-of-tolerance condition. When out-of-tolerance is detected, the four conditioned chip-enable outputs are forced inactive to write-protect up to four banks of SRAM.

During a power failure, the external SRAMs are switched from the V_{CC} supply to one of two 3V backup supplies. On a subsequent power-up, the SRAMs are write-protected until a power-valid condition exists.

During power-valid operation, a two-input decoder transparently selects one of up to four banks of SRAM.

Pin Connections

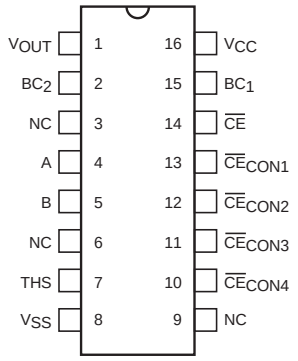

16-Pin Narrow DIP or SOIC

PN220401.eps

Pin Names

V_{OUT}	Supply output
BC_1–BC_2	3 volt primary backup cell inputs
THS	Threshold select input
$\overline{CE}$	chip-enable active low input
$\overline{CE}_{CON1}$–$\overline{CE}_{CON4}$	Conditioned chip-enable outputs
A–B	Decoder inputs
NC	No connect
V_{CC}	+5 volt supply input
V_{SS}	Ground

Functional Description

Up to four banks of CMOS static RAM can be battery-backed using the V_{OUT} and conditioned chip-enable output pins from the bq2204A. As V_{CC} slews down during a power failure, the conditioned chip-enable outputs $\overline{CE}_{CON1}$ through $\overline{CE}_{CON4}$ are forced inactive independent of the chip-enable input $\overline{CE}$.

This activity unconditionally write-protects the external SRAM as V_{CC} falls below an out-of-tolerance threshold V_{PFD}. V_{PFD} is selected by the threshold select input pin, THS. If THS is tied to V_{SS}, the power-fail detection occurs at 4.62V typical for 5% supply operation.

If THS is tied to V_{CC}, power-fail detection occurs at 4.37V typical for 10% supply operation. The THS pin must be tied to V_{SS} or V_{CC} for proper operation.

If a memory access is in process to any of the four external banks of SRAM during power-fail detection, that memory cycle continues to completion before the memory is write-protected. If the memory cycle is not terminated within time t_{WPT}, all four chip-enable outputs are unconditionally driven high, write-protecting the controlled SRAMs.

Dec. 1992 B

As the supply continues to fall past V_{PFD}, an internal switching device forces V_{OUT} to one of the two external backup energy sources. $\overline{CE}_{CON1}$ through $\overline{CE}_{CON4}$ are held high by the V_{OUT} energy source.

During power-up, V_{OUT} is switched back to the 5V supply as V_{CC} rises above the backup cell input voltage sourcing V_{OUT}. Outputs $\overline{CE}_{CON1}$ through $\overline{CE}_{CON4}$ are held inactive for time t_{CER} (120ms maximum) after the power supply has reached V_{PFD}, independent of the $\overline{CE}$ input, to allow for processor stabilization.

During power-valid operation, the $\overline{CE}$ input is passed through to one of the four $\overline{CE}_{CON}$ outputs with a propagation delay of less than 10ns. The $\overline{CE}$ input is output on one of the four $\overline{CE}_{CON}$ output pins depending on the level of the decode inputs at A and B as shown in the Truth Table.

The A and B inputs are usually tied to high-order address pins so that a large nonvolatile memory can be designed using lower-density memory devices. Nonvolatility and decoding are achieved by hardware hookup as shown in Figure 1.

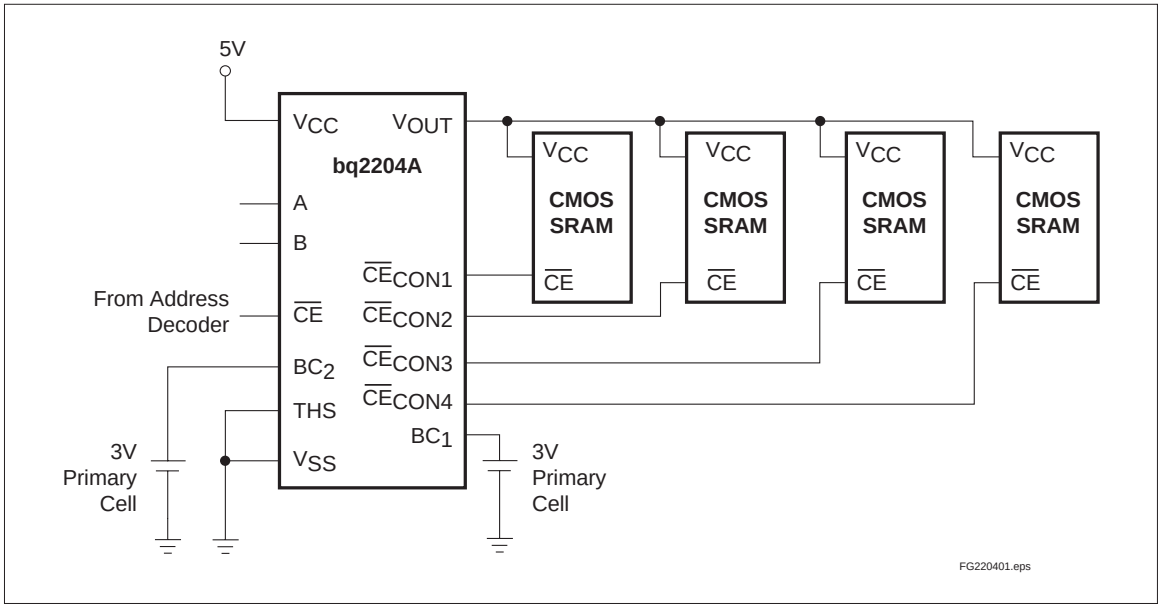

Figure 1. Hardware Hookup (5% Supply Operation)

Energy Cell Inputs—BC_1, BC_2

Two backup energy source inputs are provided on the bq2204A. The BC_1 and BC_2 inputs accept a 3V primary battery (non-rechargeable), typically some type of lithium chemistry. If no primary cell is to be used on either BC_1 or BC_2, the unused input should be tied to V_{SS}.

V_{CC} falling below V_{PFD} starts the comparison of BC_1 and BC_2. The BC input comparison continues until V_{CC} rises above V_{SO}. Power to V_{OUT} begins with BC_1 and switches to BC_2 only when V_{BC1} is less than V_{BC2} minus V_{BSO}. The controller alternates to the higher BC voltage only when the difference between the BC input voltages is greater than V_{BSO}. Alternating the backup batteries allows one-at-a-time battery replacement and efficient use of both backup batteries.

To prevent battery drain when there is no valid data to retain, V_{OUT} and $\overline{CE}_{CON1-4}$ are internally isolated from BC_1 and BC_2 by either of the following conditions:

- Initial connection of a battery to BC_1 or BC_2, or
- Presentation of an isolation signal on $\overline{CE}$.

A valid isolation signal requires $\overline{CE}$ low as V_{CC} crosses both V_{PFD} and V_{SO} during a power-down. See Figure 2. Between these two points in time, $\overline{CE}$ must be brought to the point of (0.48 to 0.52)*V_{CC} and held for at least 700ns. The isolation signal is invalid if $\overline{CE}$ exceeds 0.54*V_{CC} at any point between V_{CC} crossing V_{PFD} and V_{SO}.

The appropriate battery is connected to V_{OUT} and $\overline{CE}_{CON1–4}$ immediately on subsequent application and removal of V_{CC}.

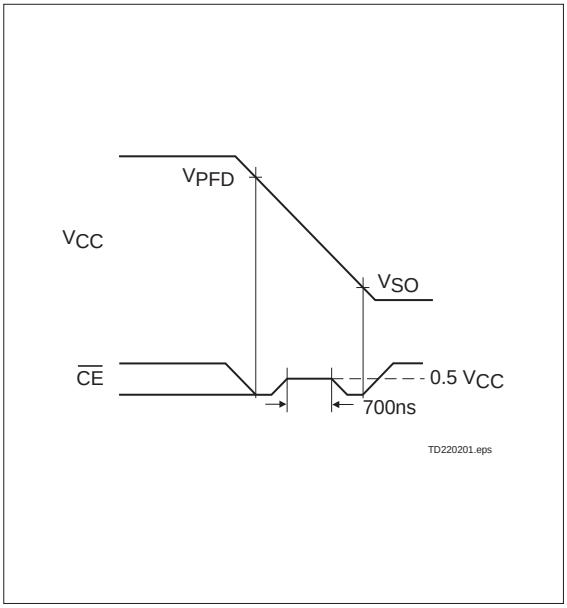

Figure 2. Battery Isolation Signal

Truth Table

Input			Output			
$\overline{CE}$	A	B	$\overline{CE}_{CON1}$	$\overline{CE}_{CON2}$	$\overline{CE}_{CON3}$	$\overline{CE}_{CON4}$
H	X	X	H	H	H	H
L	L	L	L	H	H	H
L	H	L	H	L	H	H
L	L	H	H	H	L	H
L	H	H	H	H	H	L

Absolute Maximum Ratings

Symbol	Parameter	Value	Unit	Conditions
V_{CC}	DC voltage applied on V_{CC} relative to V_{SS}	-0.3 to +7.0	V	
V_T	DC voltage applied on any pin excluding V_{CC} relative to V_{SS}	-0.3 to +7.0	V	$V_T \leq V_{CC} + 0.3$
T_{OPR}	Operating temperature	0 to 70	°C	Commercial
		-40 to +85	°C	Industrial "N"
T_{STG}	Storage temperature	-55 to +125	°C	
T_{BIAS}	Temperature under bias	-40 to +85	°C	
T_{SOLDER}	Soldering temperature	260	°C	For 10 seconds
I_{OUT}	V_{OUT} current	200	mA	

Note: Permanent device damage may occur if **Absolute Maximum Ratings** are exceeded. Functional operation should be limited to the Recommended DC Operating Conditions detailed in this data sheet. Exposure to conditions beyond the operational limits for extended periods of time may affect device reliability.

Recommended DC Operating Conditions ($T_A = T_{OPR}$)

Symbol	Parameter	Minimum	Typical	Maximum	Unit	Notes
V_{CC}	Supply voltage	4.75	5.0	5.5	V	THS = V_{SS}
		4.50	5.0	5.5	V	THS = V_{CC}
V_{SS}	Supply voltage	0	0	0	V	
V_{IL}	Input low voltage	-0.3	-	0.8	V	
V_{IH}	Input high voltage	2.2	-	$V_{CC} + 0.3$	V	
V_{BC1}, V_{BC2}	Backup cell voltage	2.0	-	4.0	V	$V_{CC} < V_{BC}$
THS	Threshold select	-0.3	-	$V_{CC} + 0.3$	V	

Note: Typical values indicate operation at $T_A = 25°C$, $V_{CC} = 5V$ or V_{BC}.

DC Electrical Characteristics ($T_A = T_{OPR}$, V_{CC} = 5V ± 10%)

Symbol	Parameter	Minimum	Typical	Maximum	Unit	Conditions/Notes
I_{LI}	Input leakage current	-	-	± 1	µA	$V_{IN} = V_{SS}$ to V_{CC}
V_{OH}	Output high voltage	2.4	-	-	V	I_{OH} = -2.0mA
V_{OHB}	V_{OH}, BC supply	V_{BC} - 0.3	-	-	V	$V_{BC} > V_{CC}$, I_{OH} = -10µA
V_{OL}	Output low voltage	-	-	0.4	V	I_{OL} = 4.0mA
I_{CC}	Operating supply current	-	3	6	mA	No load on outputs.
V_{PFD}	Power-fail detect voltage	4.55	4.62	4.75	V	THS = V_{SS}
		4.30	4.37	4.50	V	THS = V_{CC}
V_{SO}	Supply switch-over voltage	-	V_{BC}	-	V	
I_{CCDR}	Data-retention mode current	-	-	100	nA	V_{OUT} data-retention current to additional memory not included.
V_{BC}	Active backup cell voltage	-	V_{BC1}	-	V	$V_{BC1} > V_{BC2} + V_{BSO}$
		-	V_{BC2}	-	V	$V_{BC2} > V_{BC1} + V_{BSO}$
V_{BSO}	Battery switch-over voltage	0.25	0.4	0.6	V	
I_{OUT1}	V_{OUT} current	-	-	160	mA	$V_{OUT} > V_{CC}$ - 0.3V
I_{OUT2}	V_{OUT} current	-	100	-	µA	$V_{OUT} > V_{BC}$ - 0.2V

Note: Typical values indicate operation at T_A = 25°C, V_{CC} = 5V or V_{BC}.

Capacitance (T_A = 25°C, F = 1MHz, V_{CC} = 5.0V)

Symbol	Parameter	Minimum	Typical	Maximum	Unit	Conditions
C_{IN}	Input capacitance	-	-	8	pF	Input voltage = 0V
C_{OUT}	Output capacitance	-	-	10	pF	Output voltage = 0V

Note: This parameter is sampled and not 100% tested.

AC Test Conditions

Parameter	Test Conditions
Input pulse levels	0V to 3.0V
Input rise and fall times	5ns
Input and output timing reference levels	1.5V (unless otherwise specified)

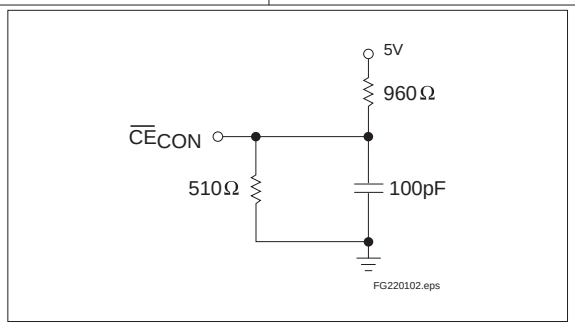

Figure 3. Output Load

Power-Fail Control ($T_A = T_{OPR}$)

Symbol	Parameter	Minimum	Typical	Maximum	Unit	Notes
t_{PF}	V_{CC} slew, 4.75V to 4.25V	300	-	-	µs	
t_{FS}	V_{CC} slew, 4.25V to V_{SO}	10	-	-	µs	
t_{PU}	V_{CC} slew, 4.25V to 4.75V	0	-	-	µs	
t_{CED}	chip-enable propagation delay	-	7	10	ns	
t_{AS}	A,B set up to $\overline{CE}$	0	-	-	ns	
t_{CER}	chip-enable recovery	40	80	120	ms	Time during which SRAM is write-protected after V_{CC} passes V_{PFD} on power-up.
t_{WPT}	Write-protect time	40	100	150	µs	Delay after V_{CC} slews down past V_{PFD} before SRAM is write-protected.

Note: Typical values indicate operation at T_A = 25°C, V_{CC} = 5V.

Caution: Negative undershoots below the absolute maximum rating of -0.3V in battery-backup mode may affect data integrity.

Power-Down Timing

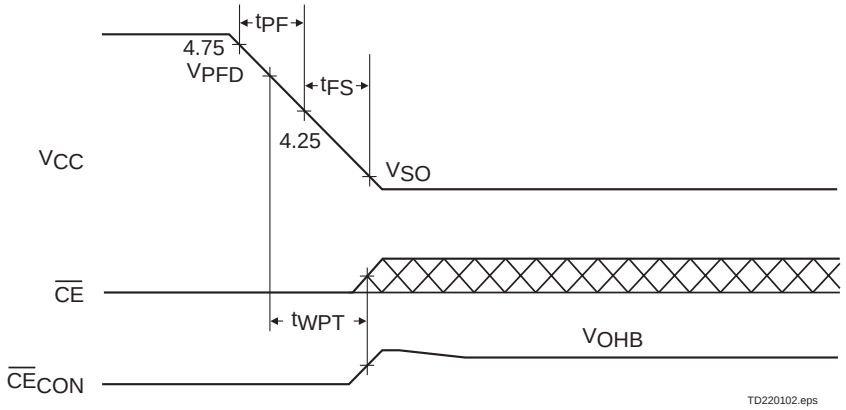

Power-Up Timing

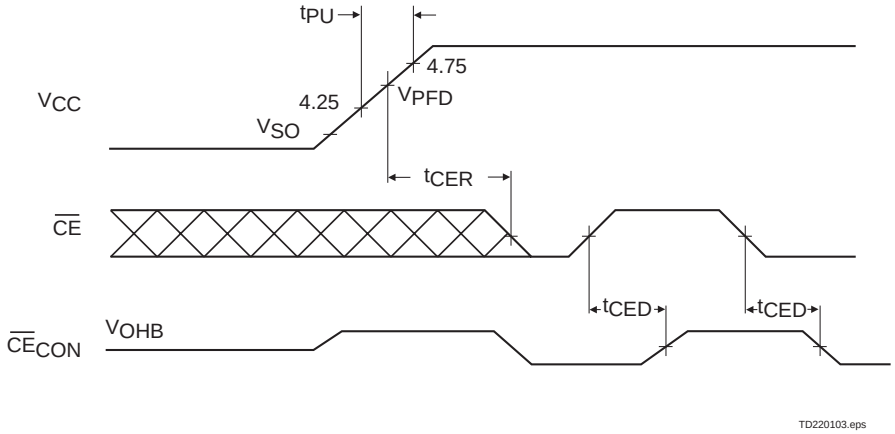

Address-Decode Timing

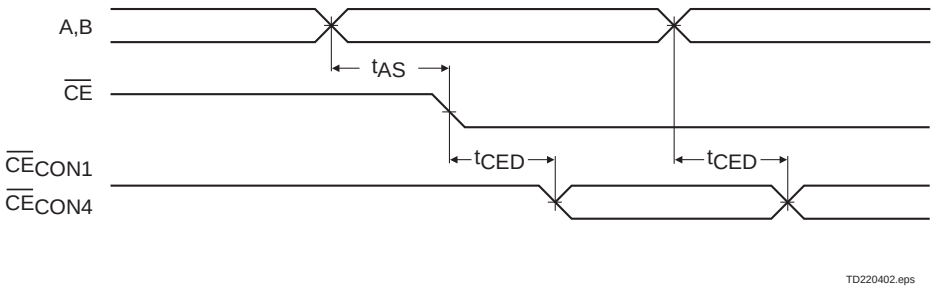

Data Sheet Revision History

Change No.	Page No.	Description of Change	Nature of Change
1	All	bq2204A replaces bq2204.	
1	1, 4–5	10% tolerance requires the THS pin to be tied to V_{CC}, not V_{OUT}.	
1	3	Energy cell input selection process alternates between BC_1 and BC_2.	

Note: Change 1 = Dec. 1992 changes from Sept. 1991

PACKAGING INFORMATION

Orderable Device	Status [1]	Package Type	Package Drawing	Pins	Package Qty	Eco Plan [2]	Lead/ Ball Finish	MSL Peak Temp [3]	Samples (Requires Login)
BQ2204APN	ACTIVE	PDIP	N	16	25	Pb-Free (RoHS)	CU NIPDAU	N / A for Pkg Type	
BQ2204ASN	ACTIVE	SOIC	D	16	40	Green (RoHS & no Sb/Br)	CU NIPDAU	Level-2-260C-1 YEAR	
BQ2204ASN-N	ACTIVE	SOIC	D	16	40	Green (RoHS & no Sb/Br)	CU NIPDAU	Level-2-260C-1 YEAR	
BQ2204ASN-NG4	ACTIVE	SOIC	D	16	40	Green (RoHS & no Sb/Br)	CU NIPDAU	Level-2-260C-1 YEAR	
BQ2204ASNG4	ACTIVE	SOIC	D	16	40	Green (RoHS & no Sb/Br)	CU NIPDAU	Level-2-260C-1 YEAR	
BQ2204ASNTR	ACTIVE	SOIC	D	16	2500	Green (RoHS & no Sb/Br)	CU NIPDAU	Level-2-260C-1 YEAR	
BQ2204ASNTRG4	ACTIVE	SOIC	D	16	2500	Green (RoHS & no Sb/Br)	CU NIPDAU	Level-2-260C-1 YEAR	

[1] The marketing status values are defined as follows:
ACTIVE: Product device recommended for new designs.
LIFEBUY: TI has announced that the device will be discontinued, and a lifetime-buy period is in effect.
NRND: Not recommended for new designs. Device is in production to support existing customers, but TI does not recommend using this part in a new design.
PREVIEW: Device has been announced but is not in production. Samples may or may not be available.
OBSOLETE: TI has discontinued the production of the device.

[2] Eco Plan - The planned eco-friendly classification: Pb-Free (RoHS), Pb-Free (RoHS Exempt), or Green (RoHS & no Sb/Br) - please check http://www.ti.com/productcontent for the latest availability information and additional product content details.
TBD: The Pb-Free/Green conversion plan has not been defined.
Pb-Free (RoHS): TI's terms "Lead-Free" or "Pb-Free" mean semiconductor products that are compatible with the current RoHS requirements for all 6 substances, including the requirement that lead not exceed 0.1% by weight in homogeneous materials. Where designed to be soldered at high temperatures, TI Pb-Free products are suitable for use in specified lead-free processes.
Pb-Free (RoHS Exempt): This component has a RoHS exemption for either 1) lead-based flip-chip solder bumps used between the die and package, or 2) lead-based die adhesive used between the die and leadframe. The component is otherwise considered Pb-Free (RoHS compatible) as defined above.
Green (RoHS & no Sb/Br): TI defines "Green" to mean Pb-Free (RoHS compatible), and free of Bromine (Br) and Antimony (Sb) based flame retardants (Br or Sb do not exceed 0.1% by weight in homogeneous material)

[3] MSL, Peak Temp. -- The Moisture Sensitivity Level rating according to the JEDEC industry standard classifications, and peak solder temperature.

Important Information and Disclaimer: The information provided on this page represents TI's knowledge and belief as of the date that it is provided. TI bases its knowledge and belief on information provided by third parties, and makes no representation or warranty as to the accuracy of such information. Efforts are underway to better integrate information from third parties. TI has taken and

continues to take reasonable steps to provide representative and accurate information but may not have conducted destructive testing or chemical analysis on incoming materials and chemicals. TI and TI suppliers consider certain information to be proprietary, and thus CAS numbers and other limited information may not be available for release.

In no event shall TI's liability arising out of such information exceed the total purchase price of the TI part(s) at issue in this document sold by TI to Customer on an annual basis.

TAPE AND REEL INFORMATION

REEL DIMENSIONS

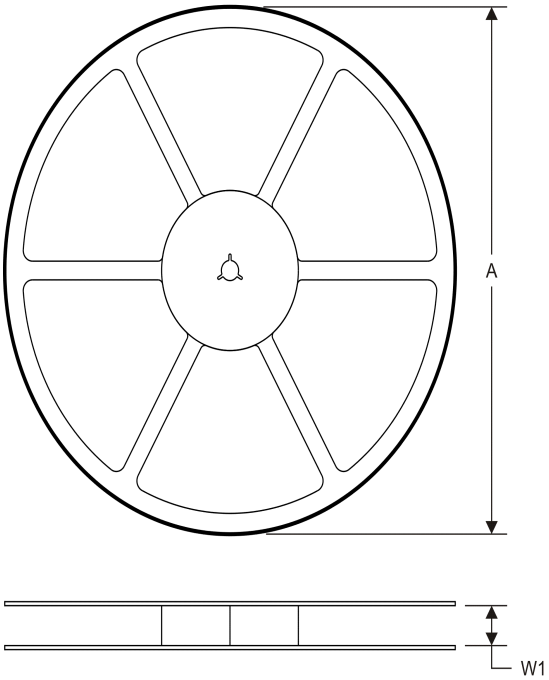

TAPE DIMENSIONS

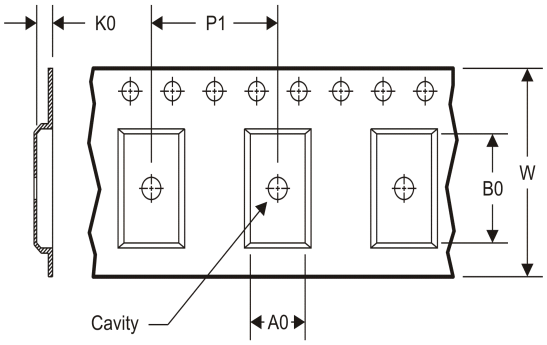

A0	Dimension designed to accommodate the component width
B0	Dimension designed to accommodate the component length
K0	Dimension designed to accommodate the component thickness
W	Overall width of the carrier tape
P1	Pitch between successive cavity centers

TAPE AND REEL INFORMATION

*All dimensions are nominal

Device	Package Type	Package Drawing	Pins	SPQ	Reel Diameter (mm)	Reel Width W1 (mm)	A0 (mm)	B0 (mm)	K0 (mm)	P1 (mm)	W (mm)	Pin1 Quadrant
BQ2204ASNTR	SOIC	D	16	2500	330.0	16.4	6.5	10.3	2.1	8.0	16.0	Q1

TAPE AND REEL BOX DIMENSIONS

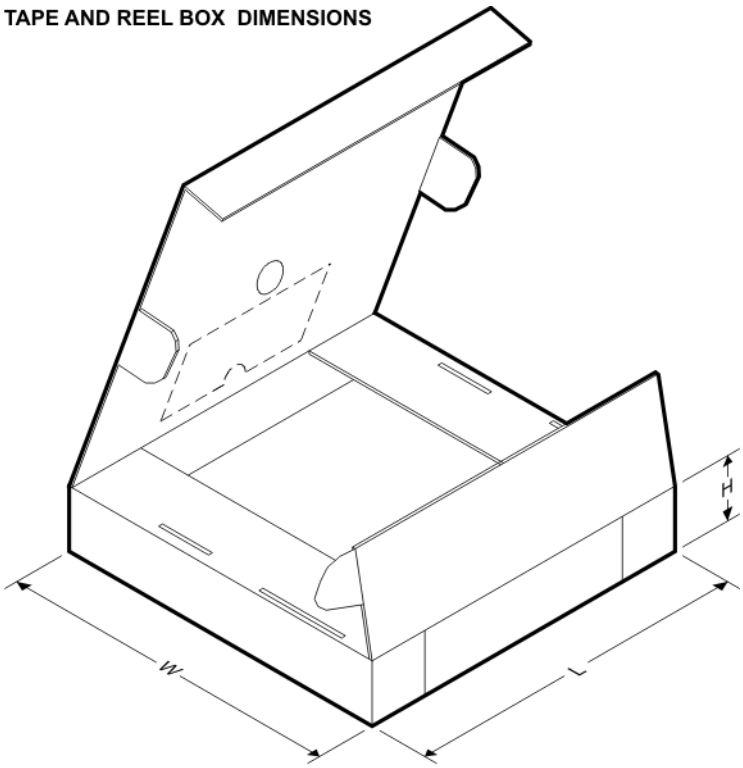

*All dimensions are nominal

Device	Package Type	Package Drawing	Pins	SPQ	Length (mm)	Width (mm)	Height (mm)
BQ2204ASNTR	SOIC	D	16	2500	367.0	367.0	38.0

IMPORTANT NOTICE

Texas Instruments Incorporated and its subsidiaries (TI) reserve the right to make corrections, enhancements, improvements and other changes to its semiconductor products and services per JESD46C and to discontinue any product or service per JESD48B. Buyers should obtain the latest relevant information before placing orders and should verify that such information is current and complete. All semiconductor products (also referred to herein as “components”) are sold subject to TI’s terms and conditions of sale supplied at the time of order acknowledgment.

TI warrants performance of its components to the specifications applicable at the time of sale, in accordance with the warranty in TI’s terms and conditions of sale of semiconductor products. Testing and other quality control techniques are used to the extent TI deems necessary to support this warranty. Except where mandated by applicable law, testing of all parameters of each component is not necessarily performed.

TI assumes no liability for applications assistance or the design of Buyers’ products. Buyers are responsible for their products and applications using TI components. To minimize the risks associated with Buyers’ products and applications, Buyers should provide adequate design and operating safeguards.

TI does not warrant or represent that any license, either express or implied, is granted under any patent right, copyright, mask work right, or other intellectual property right relating to any combination, machine, or process in which TI components or services are used. Information published by TI regarding third-party products or services does not constitute a license to use such products or services or a warranty or endorsement thereof. Use of such information may require a license from a third party under the patents or other intellectual property of the third party, or a license from TI under the patents or other intellectual property of TI.

Reproduction of significant portions of TI information in TI data books or data sheets is permissible only if reproduction is without alteration and is accompanied by all associated warranties, conditions, limitations, and notices. TI is not responsible or liable for such altered documentation. Information of third parties may be subject to additional restrictions.

Resale of TI components or services with statements different from or beyond the parameters stated by TI for that component or service voids all express and any implied warranties for the associated TI component or service and is an unfair and deceptive business practice. TI is not responsible or liable for any such statements.

Buyer acknowledges and agrees that it is solely responsible for compliance with all legal, regulatory and safety-related requirements concerning its products, and any use of TI components in its applications, notwithstanding any applications-related information or support that may be provided by TI. Buyer represents and agrees that it has all the necessary expertise to create and implement safeguards which anticipate dangerous consequences of failures, monitor failures and their consequences, lessen the likelihood of failures that might cause harm and take appropriate remedial actions. Buyer will fully indemnify TI and its representatives against any damages arising out of the use of any TI components in safety-critical applications.

In some cases, TI components may be promoted specifically to facilitate safety-related applications. With such components, TI’s goal is to help enable customers to design and create their own end-product solutions that meet applicable functional safety standards and requirements. Nonetheless, such components are subject to these terms.

No TI components are authorized for use in FDA Class III (or similar life-critical medical equipment) unless authorized officers of the parties have executed a special agreement specifically governing such use.

Only those TI components which TI has specifically designated as military grade or “enhanced plastic” are designed and intended for use in military/aerospace applications or environments. Buyer acknowledges and agrees that any military or aerospace use of TI components which have ***not*** been so designated is solely at the Buyer's risk, and that Buyer is solely responsible for compliance with all legal and regulatory requirements in connection with such use.

TI has specifically designated certain components which meet ISO/TS16949 requirements, mainly for automotive use. Components which have not been so designated are neither designed nor intended for automotive use; and TI will not be responsible for any failure of such components to meet such requirements.

Products		**Applications**	
Audio	www.ti.com/audio	Automotive and Transportation	www.ti.com/automotive
Amplifiers	amplifier.ti.com	Communications and Telecom	www.ti.com/communications
Data Converters	dataconverter.ti.com	Computers and Peripherals	www.ti.com/computers
DLP® Products	www.dlp.com	Consumer Electronics	www.ti.com/consumer-apps
DSP	dsp.ti.com	Energy and Lighting	www.ti.com/energy
Clocks and Timers	www.ti.com/clocks	Industrial	www.ti.com/industrial
Interface	interface.ti.com	Medical	www.ti.com/medical
Logic	logic.ti.com	Security	www.ti.com/security
Power Mgmt	power.ti.com	Space, Avionics and Defense	www.ti.com/space-avionics-defense
Microcontrollers	microcontroller.ti.com	Video and Imaging	www.ti.com/video
RFID	www.ti-rfid.com		
OMAP Mobile Processors	www.ti.com/omap	**TI E2E Community**	e2e.ti.com
Wireless Connectivity	www.ti.com/wirelessconnectivity		

Mailing Address: Texas Instruments, Post Office Box 655303, Dallas, Texas 75265
Copyright © 2012, Texas Instruments Incorporated

О компании

ООО "ТрейдЭлектроникс" - это оперативные поставки широкого спектра электронных компонентов отечественного и импортного производства напрямую от производителей и с крупнейших мировых складов. Реализуемая нашей компанией продукция насчитывает более полумиллиона наименований.

Благодаря этому наша компания предлагает к поставке практически не ограниченный ассортимент компонентов как оптовыми, мелкооптовыми партиями, так и в розницу.

Наличие собственной эффективной системы логистики обеспечивает надежную поставку продукции по конкурентным ценам в точно указанные сроки.

Срок поставки со стоков в **Европе и Америке – от 3 до 14 дней.**

Срок поставки из **Азии – от 10 дней.**

Благодаря развитой сети поставщиков, помогаем в поиске и приобретении экзотичных или снятых с производства компонентов.

Предоставляем спец цены на элементы для создания инженерных сэмплов.

Упорный труд, качественный результат дают нам право быть уверенными в себе и надежными для наших клиентов.

Наша компания это:

- Гарантия качества поставляемой продукции
- Широкий ассортимент
- Минимальные сроки поставок
- Техническая поддержка
- Подбор комплектации
- Индивидуальный подход
- Гибкое ценообразование

Наша организация особенно сильна в поставках модулей, микросхем, пассивных компонентов, ксайленсах (XC), EPF, EPM и силовой электроники.

Большой выбор предлагаемой продукции, различные виды оплаты и доставки, позволят Вам сэкономить время и получить максимум выгоды от сотрудничества с нами!

Trade Electronics.ru

гарантия бесперебойности производства и качества выпускаемой продукции

Перечень производителей, продукцию которых мы поставляем на российский рынок

AMD
ANALOG DEVICES
BOURNS
Coilcraft
élantec Semiconductor, Inc.
HARRIS
Infineon
JRC
MICREL
MOTOROLA
nichicon
PHILIPS
ROHM
SGS-THOMSON
Sipex
TAIYO YUDEN
TOKO
ZILOG
Winbond
Allegro
ATMEL
BURR - BROWN
EXAR
HITACHI
intel
Lattice
muRata
OKI
QUALCOMM
SAMSUNG
SHARP
SONY
TDK
TOSHIBA
KYOCERA
ALTERA
AVX
CITILYST
CYPRESS
FAIRCHILD SEMICONDUCTOR
HOLTEK
International IOR Rectifier
LINEAR TECHNOLOGY
MITSUBISHI
National Semiconductor
ON Semiconductor
REALTEK
SANYO
SHINDENGEN
SGS
TECCOR
TUNDRA
XILINX
Amphenol
Bay Linear
CIRRUS LOGIC
DALLAS
FUJITSU
IDT
intersil
MAXIM
molex
NEC
Panasonic
RENESAS
SII
SIEMENS
ST
Texas Instruments
VISHAY
ZETEX SEMICONDUCTORS

Trade Electronics.ru

гарантия бесперебойности производства и качества выпускаемой продукции

С удовольствием будем прорабатывать для Вас поставки всех необходимых компонентов по текущим запросам для скорейшего выявления групп элементов, по которым сотрудничество именно с нашей компанией будет для Вас максимально выгодным!

С уважением,

Менеджер отдела продаж ООО

«Трейд Электроникс»

Шишлаков Евгений

8 (495)668-30-28 доб 169

manager28@tradeelectronics.ru

http://www.tradeelectronics.ru/