EM-93444-0040

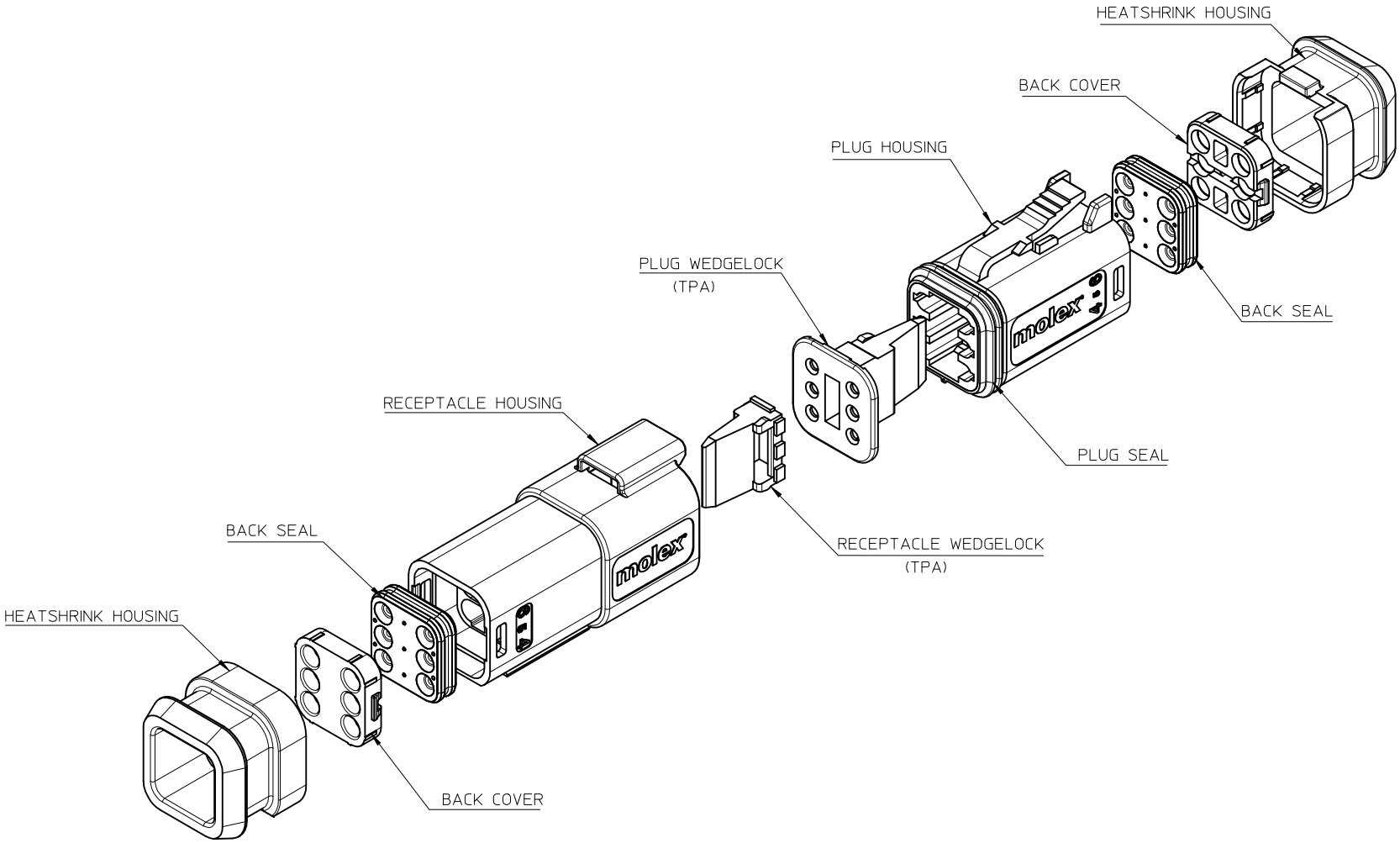

NOTES

1. SEE SHEETS 2 TO 7 FOR UNSPECIFIED NOTES, DIMENSIONS AND PART NUMBERS

PROPOSED	EC NO: IPG2015-1746	DRWN: JFLETCHER 2015/04/07	CH'KD: APPR: JWALLACE 2015/07/16
REV 3	DESCRIPTION		

QUALITY SYMBOLS: ▼=0, (C)=0

GENERAL TOLERANCES (UNLESS SPECIFIED)

	mm	INCH
4 PLACES	± ---	± ---
3 PLACES	± ---	± ---
2 PLACES	± 0.10	± ---
1 PLACE	± 0.20	± ---
0 PLACE	± ---	± ---

ANGULAR ± 2 °

DRAFT WHERE APPLICABLE MUST REMAIN WITHIN DIMENSIONS

DIMENSION STYLE: MM ONLY	SCALE: 1.5:1	DESIGN UNITS: METRIC	THIRD ANGLE PROJECTION
DRAWN BY: JFLETCHER	DATE: 2014/04/23	TITLE: 6CCT ML-XT CV CONNECTOR	
CHECKED BY	DATE		
APPROVED BY: JWALLACE	DATE: 2014/10/01	molex	
MATERIAL NO.: SEE NOTES		DOCUMENT NO.: SD-93443-004	SHEET NO.: 1 OF 7
SIZE: A3			

THIS DRAWING CONTAINS INFORMATION THAT IS PROPRIETARY TO MOLEX INCORPORATED AND SHOULD NOT BE USED WITHOUT WRITTEN PERMISSION

6CCT RECEPTACLE CONNECTOR

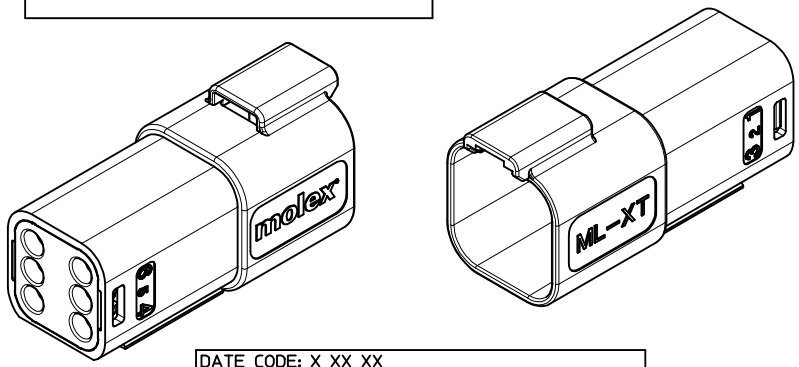

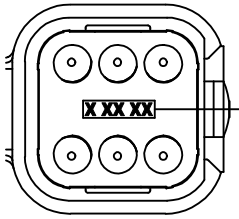

DETAIL 1
(ROTATED 90°)

DATE CODE: X XX XX
X —— DAY: 1 - 7
X, X — WEEK: 01 - 52
X, X — YEAR: 00 - 99

EXAMPLE: 11315 = DAY 1 OF WEEK 13 OF YEAR 15
i.e. 23rd OF MARCH 2015

6CCT RECEPTACLE CONNECTOR WITH HEATSHRINK HOUSING ULTRASONICALLY WELDED IN PLACE

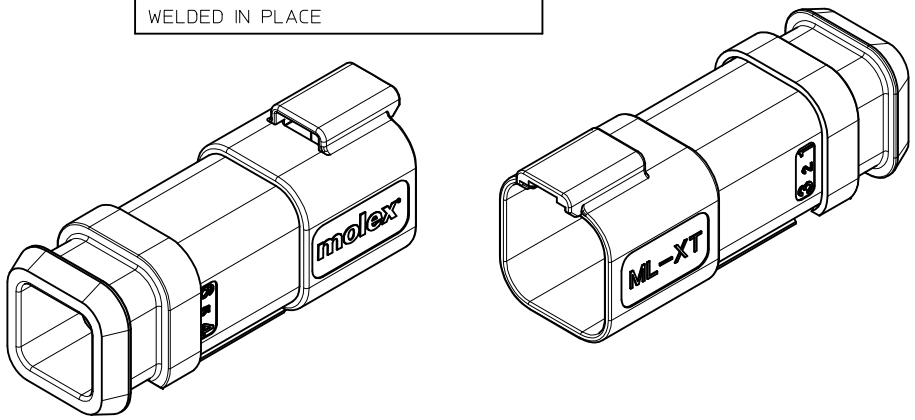

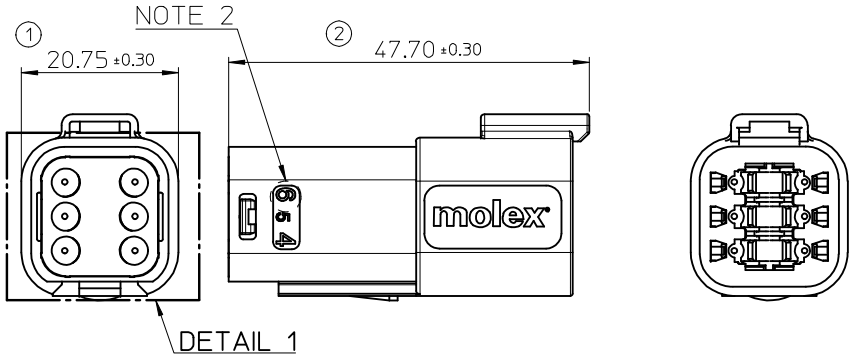

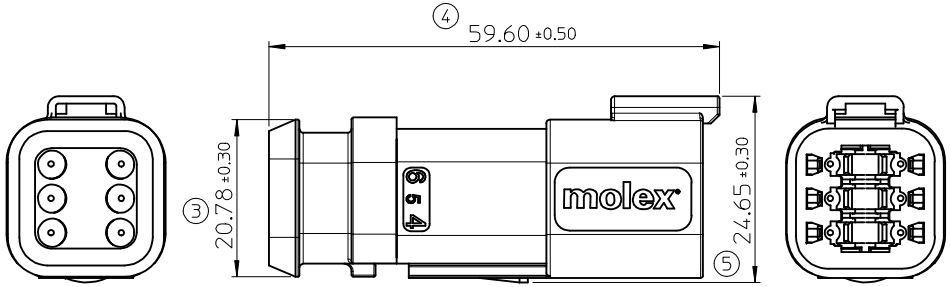

NOTES
1. MATERIAL
   HOUSING: NYLON 30%GF
   SEAL: HIGH CONSISTENCY RUBBER
2. CIRCUIT IDENTIFICATION
3. JACKET RANGE LARGE = Ø2.7MM TO 3.6MM (SEAL COLOUR: LIGHT BLUE)
   JACKET RANGE SMALL = Ø1.4MM TO 2.7MM (SEAL COLOUR: BURNT ORANGE)
4. SEE SHEET 3 FOR FINAL PART NUMBER DESIGNATION
5. SEE PS-93443-001 FOR PRODUCT SPECIFICATION
6. SEE PK-93443-001 FOR PACKAGING SPECIFICATION

LAST INSPECTION NUMBER: 5
INSPECTION NUMBERS 1-50 RESERVED FOR SHEET 2

SEE SHEET 1	EC NO: IPG2015-1746	DRWN: JFLETCHER 2015/04/07	CHKD: APPR: JWALLACE 2015/07/16
REV	DESCRIPTION		
3			

QUALITY SYMBOLS
▼=0
Ⓒ=0

GENERAL TOLERANCES (UNLESS SPECIFIED)

	mm	INCH
4 PLACES	± ---	± ---
3 PLACES	± ---	± ---
2 PLACES	± 0.10	± ---
1 PLACE	± 0.20	± ---
0 PLACE	± ---	± ---
ANGULAR ± 2 °		

DRAFT WHERE APPLICABLE MUST REMAIN WITHIN DIMENSIONS

DIMENSION STYLE: MM ONLY	SCALE: 1.5:1	DESIGN UNITS: METRIC	THIRD ANGLE PROJECTION
DRAWN BY: JFLETCHER	DATE: 2014/04/23	TITLE: 6CCT ML-XT CV CONNECTOR	
CHECKED BY	DATE		
APPROVED BY: JWALLACE	DATE: 2014/10/01	molex	
MATERIAL NO.: SEE NOTES		DOCUMENT NO.: SD-93443-004	SHEET NO.: 2 OF 7
SIZE: A3			

THIS DRAWING CONTAINS INFORMATION THAT IS PROPRIETARY TO MOLEX INCORPORATED AND SHOULD NOT BE USED WITHOUT WRITTEN PERMISSION

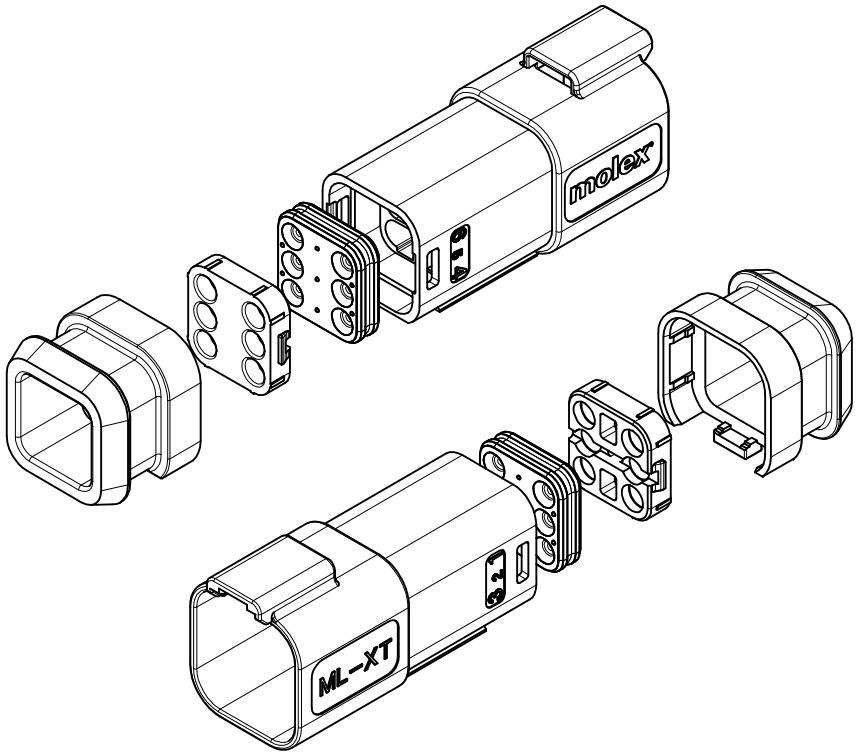

6CCT RECEPTACLE CONNECTOR

93444 | 4 | _ | _ _

SERIES NO.

CIRCUIT SIZE
4 = 6cct

ASSEMBLY OPTIONS
1 = RECEP ASSEMBLY FOR WIRE JACKET RANGE: Ø1.4mm-2.7mm (NOTE 2)
2 = RECEP ASSEMBLY FOR WIRE JACKET RANGE: Ø2.7mm-3.6mm (NOTE 2)
5 = RECEP ASSEMBLY & HEATSHR FOR WIRE JACKET RANGE: Ø1.4mm-2.7mm (NOTE 3)
6 = RECEP ASSEMBLY & HEATSHR FOR WIRE JACKET RANGE: Ø2.7mm-3.6mm (NOTE 3)

COLOUR
01=BLACK
02=GREY 06=WHITE
03=GREEN 07=BROWN
04=BLUE 08=ORANGE
05=YELLOW 09=RED

EXAMPLE:
6cct RECEP BLACK WITH LARGE SEAL AND HEATSHRINK 93444-4601

NOTES
1. SEE SHEET 2 FOR UNSPECIFIED NOTES AND DIMENSIONS
2. BACK COVER HOUSING COLOUR: BLACK
3. HEATSHRINK HOUSING COLOUR: BLACK

SEE SHEET 1
EC NO: IPG2015-1746 2015/04/07
DRWN: JFLETCHER
CH'KD:
APPR: JWALLACE 2015/07/16
REV DESCRIPTION
3

QUALITY SYMBOLS
▼=0
(C)=0

GENERAL TOLERANCES (UNLESS SPECIFIED)

	mm	INCH
4 PLACES	± ---	± ---
3 PLACES	± ---	± ---
2 PLACES	± 0.10	± ---
1 PLACE	± 0.20	± ---
0 PLACE	± ---	± ---

ANGULAR ± 2 °
DRAFT WHERE APPLICABLE MUST REMAIN WITHIN DIMENSIONS

DIMENSION STYLE: MM ONLY
SCALE: 1.5:1
DESIGN UNITS: METRIC
THIRD ANGLE PROJECTION

DRAWN BY: JFLETCHER DATE: 2014/04/23
CHECKED BY: DATE:
APPROVED BY: JWALLACE DATE: 2014/10/01
MATERIAL NO.: SEE NOTES
SIZE: A3

TITLE: 6CCT ML-XT CV CONNECTOR

molex

DOCUMENT NO.: SD-93443-004
SHEET NO.: 3 OF 7

THIS DRAWING CONTAINS INFORMATION THAT IS PROPRIETARY TO MOLEX INCORPORATED AND SHOULD NOT BE USED WITHOUT WRITTEN PERMISSION

tb_frame_A3_P_AM_T
Rev E1 2012/01/25

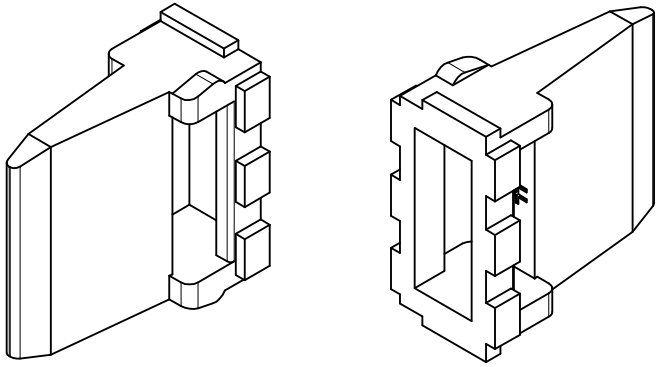

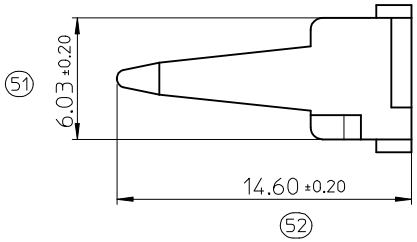

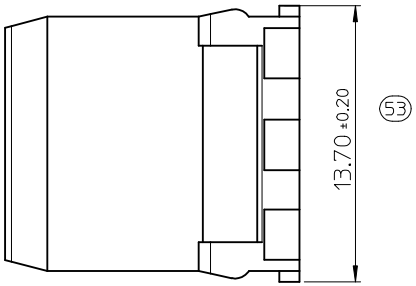

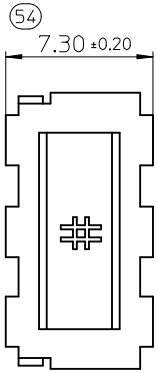

6CCT RECEPTACLE WEDGELOCK

93447	4	0	_ _

SERIES NO.

CIRCUIT SIZE
4 = 6cct

COLOUR/CODING
03=GREEN

NOTES
1. MATERIAL
   HOUSING: NYLON 30% GF
2. INSPECTION NUMBERS 51-100
   RESERVED FOR SHEET 4
LAST INSPECTION NUMBER 54

SEE SHEET 1
EC NO: IPG2015-1746 2015/04/07
DRWN: JFLETCHER
CH'KD:
APPR: JWALLACE 2015/07/16
REV DESCRIPTION
3

QUALITY SYMBOLS
▼=0
Ⓒ=0

GENERAL TOLERANCES (UNLESS SPECIFIED)

	mm	INCH
4 PLACES	± ---	± ---
3 PLACES	± ---	± ---
2 PLACES	± 0.10	± ---
1 PLACE	± 0.20	± ---
0 PLACE	± ---	± ---

ANGULAR ± 2 °

DRAFT WHERE APPLICABLE MUST REMAIN WITHIN DIMENSIONS

DIMENSION STYLE: MM ONLY
SCALE: 2:1
DESIGN UNITS: METRIC
THIRD ANGLE PROJECTION

DRAWN BY: JFLETCHER DATE: 2014/04/23
CHECKED BY: DATE:
APPROVED BY: JWALLACE DATE: 2014/10/01

TITLE: 6CCT ML-XT CV CONNECTOR

molex

MATERIAL NO.: SEE NOTES
DOCUMENT NO.: SD-93443-004
SHEET NO.: 4 OF 7
SIZE: A3

THIS DRAWING CONTAINS INFORMATION THAT IS PROPRIETARY TO MOLEX INCORPORATED AND SHOULD NOT BE USED WITHOUT WRITTEN PERMISSION

6CCT PLUG CONNECTOR

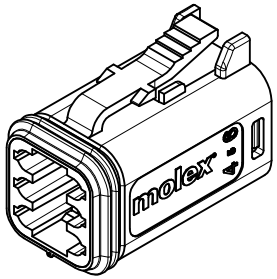

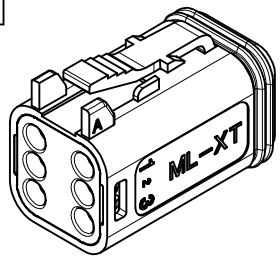

DATE CODE: X XX XX
X —— DAY: 1 - 7
X, X — WEEK: 01 - 52
X, X — YEAR: 00 - 99
EXAMPLE: 11315 = DAY 1 OF WEEK 13 OF YEAR 15
i.e. 23rd OF MARCH 2015

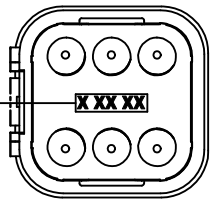

DETAIL 2
(ROTATED 90°)

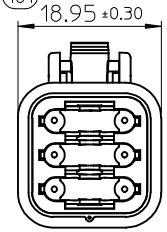

101 18.95 ±0.30

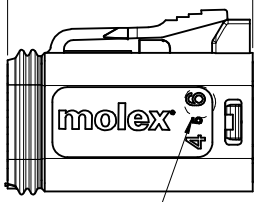

102 32.40 ±0.30

NOTE 2

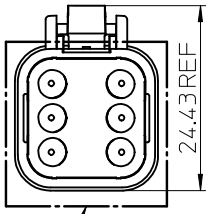

24.43 REF

DETAIL 2

6CCT PLUG CONNECTOR WITH
HEATSHRINK HOUSING ULTRASONICALLY
WELDED IN PLACE

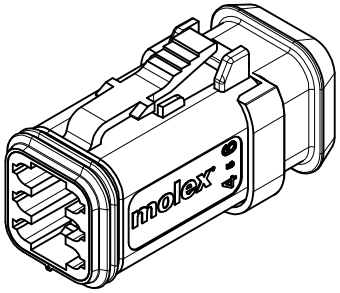

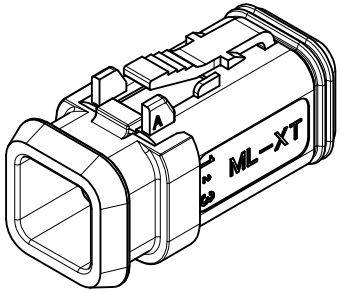

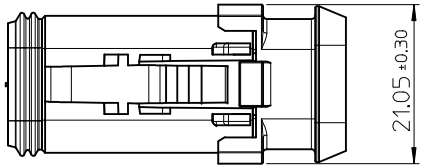

21.05 ±0.30 105

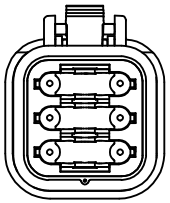

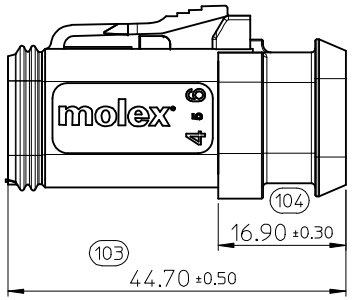

104 16.90 ±0.30

103 44.70 ±0.50

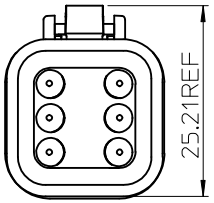

25.21 REF

NOTES
1. MATERIAL:
   HOUSING: NYLON 30% GF
   PLUG SEAL: SILICONE RUBBER
   BACK SEAL: HIGH CONSISTENCY RUBBER
2. CIRCUIT IDENTIFICATION
3. JACKET RANGE LARGE = Ø2.7MM TO 3.6MM (SEAL COLOUR: LIGHT BLUE)
   JACKET RANGE SMALL = Ø1.4MM TO 2.7MM (SEAL COLOUR: BURNT ORANGE)
4. SEE SHEET 6 FOR FINAL PART NUMBER DESIGNATION
5. INSPECTION NUMBERS 101-150 RESERVED FOR SHEET 5
LAST INSPECTION NUMBER 105

SEE SHEET 1	EC NO: IPG2015-1746	DRWN: JFLETCHER 2015/04/07	CH'KD: APPR: JWALLACE 2015/07/16
REV	DESCRIPTION		

QUALITY SYMBOLS: ▼=0, (C)=0

GENERAL TOLERANCES (UNLESS SPECIFIED)	mm	INCH
4 PLACES	± ---	± ---
3 PLACES	± ---	± ---
2 PLACES	± 0.10	± ---
1 PLACE	± 0.20	± ---
0 PLACE	± ---	± ---
ANGULAR ± 2 °		

DRAFT WHERE APPLICABLE MUST REMAIN WITHIN DIMENSIONS

DIMENSION STYLE: MM ONLY	SCALE: 1.5:1	DESIGN UNITS: METRIC	THIRD ANGLE PROJECTION
DRAWN BY: JFLETCHER	DATE: 2014/04/23	TITLE: 6CCT ML-XT CV CONNECTOR	
CHECKED BY	DATE		
APPROVED BY: JWALLACE	DATE: 2014/10/01	molex	
MATERIAL NO.: SEE NOTES		DOCUMENT NO.: SD-93443-004	SHEET NO.: 5 OF 7
SIZE: A3			

THIS DRAWING CONTAINS INFORMATION THAT IS PROPRIETARY TO MOLEX INCORPORATED AND SHOULD NOT BE USED WITHOUT WRITTEN PERMISSION

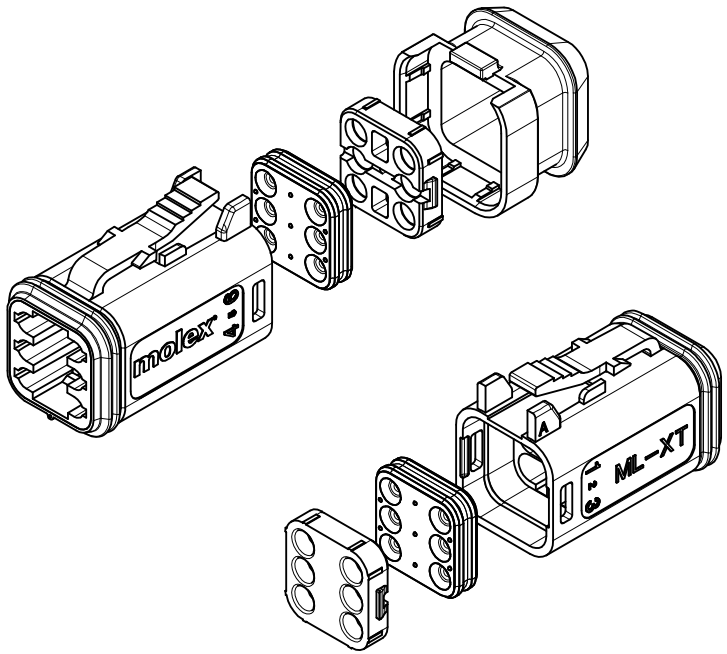

6CCT PLUG CONNECTOR

93445 | 4 | _ | _ _

SERIES NO.

CIRCUIT SIZE
4 = 6cct

ASSEMBLY OPTIONS
1 = PLUG ASSEMBLY FOR WIRE JACKET RANGE: Ø1.4mm-2.7mm (NOTE 2)
2 = PLUG ASSEMBLY FOR WIRE JACKET RANGE: Ø2.7mm-3.6mm (NOTE 2)
5 = PLUG ASSEMBLY & HEATSHR FOR WIRE JACKET RANGE: Ø1.4mm-2.7mm (NOTE 3)
6 = PLUG ASSEMBLY & HEATSHR FOR WIRE JACKET RANGE: Ø2.7mm-3.6mm (NOTE 3)

COLOUR
01=BLACK
02=GREY 06=WHITE
03=GREEN 07=BROWN
04=BLUE 08=ORANGE
05=YELLOW 09=RED

EXAMPLE:
6cct PLUG BLACK WITH LARGE SEAL AND HEATSHRINK = 93445-4601

NOTES
1. SEE SHEET 5 FOR UNSPECIFIED NOTES AND DIMENSIONS
2. BACK COVER HOUSING COLOUR: BLACK
3. HEATSHRINK HOUSING COLOUR: BLACK

SEE SHEET 1
EC NO: IPG2015-1746
DRWN: JFLETCHER 2015/04/07
CH'KD:
APPR: JWALLACE 2015/07/16
REV | DESCRIPTION

QUALITY SYMBOLS
▼=0
(C)=0

GENERAL TOLERANCES (UNLESS SPECIFIED)

	mm	INCH
4 PLACES	± ---	± ---
3 PLACES	± ---	± ---
2 PLACES	± 0.10	± ---
1 PLACE	± 0.20	± ---
0 PLACE	± ---	± ---

ANGULAR ± 2 °
DRAFT WHERE APPLICABLE MUST REMAIN WITHIN DIMENSIONS

DIMENSION STYLE: MM ONLY
SCALE: 1.5:1
DESIGN UNITS: METRIC
THIRD ANGLE PROJECTION

DRAWN BY: JFLETCHER DATE: 2014/04/23
CHECKED BY: DATE:
APPROVED BY: JWALLACE DATE: 2014/10/01
MATERIAL NO.: SEE NOTES

TITLE: 6CCT ML-XT CV CONNECTOR

molex

DOCUMENT NO.: SD-93443-004
SHEET NO.: 6 OF 7
SIZE: A3

THIS DRAWING CONTAINS INFORMATION THAT IS PROPRIETARY TO MOLEX INCORPORATED AND SHOULD NOT BE USED WITHOUT WRITTEN PERMISSION

tb_frame_A3_P_AM_T
Rev E1 2012/01/25

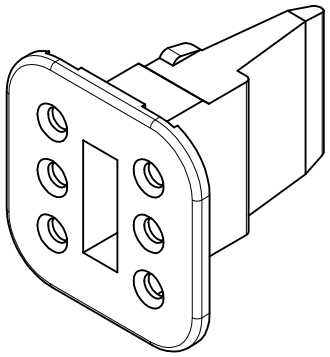

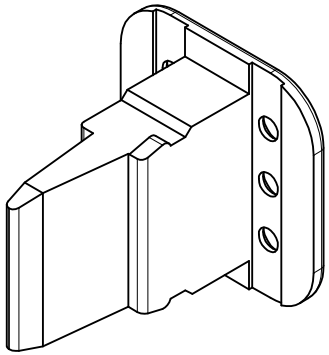

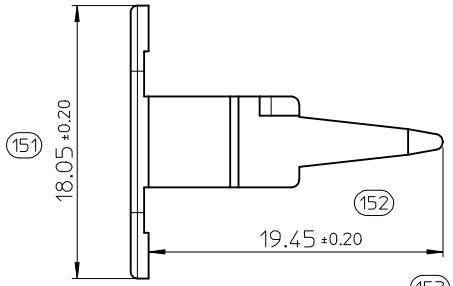

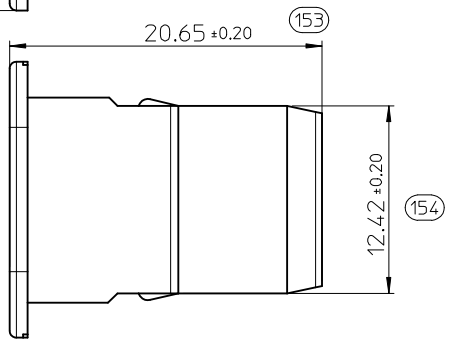

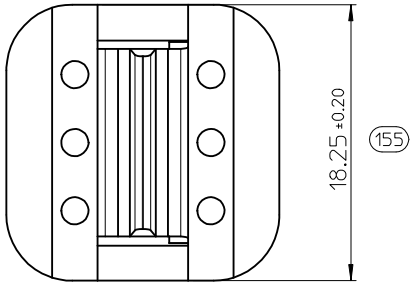

6CCT PLUG WEDGELOCK

93448	4	0	_ _

SERIES NO.

CIRCUIT SIZE
4 = 6cct

COLOUR/CODING
03=GREEN

NOTES
1. MATERIAL
   HOUSING: NYLON 30% GF
2. INSPECTION NUMBERS 151-200 RESERVED FOR SHEET 7
LAST INSPECTION NUMBER 155

SEE SHEET 1	EC NO: IPG2015-1746	DRWN: JFLETCHER	2015/04/07
		CH'KD:	
		APPR: JWALLACE	2015/07/16
REV		DESCRIPTION	

QUALITY SYMBOLS
▼=0
(C)=0

GENERAL TOLERANCES (UNLESS SPECIFIED)

	mm	INCH
4 PLACES	± ---	± ---
3 PLACES	± ---	± ---
2 PLACES	± 0.10	± ---
1 PLACE	± 0.20	± ---
0 PLACE	± ---	± ---

ANGULAR ± 2 °

DRAFT WHERE APPLICABLE MUST REMAIN WITHIN DIMENSIONS

DIMENSION STYLE: MM ONLY		SCALE: 3:1	DESIGN UNITS: METRIC
DRAWN BY: JFLETCHER	DATE: 2014/04/23	THIRD ANGLE PROJECTION	
CHECKED BY:	DATE:	TITLE: 6CCT ML-XT CV CONNECTOR	
APPROVED BY: JWALLACE	DATE: 2014/10/01	molex	
MATERIAL NO.: SEE NOTES		DOCUMENT NO.: SD-93443-004	SHEET NO.: 7 OF 7
SIZE: A3			

THIS DRAWING CONTAINS INFORMATION THAT IS PROPRIETARY TO MOLEX INCORPORATED AND SHOULD NOT BE USED WITHOUT WRITTEN PERMISSION

О компании

ООО "ТрейдЭлектроникс" - это оперативные поставки широкого спектра электронных компонентов отечественного и импортного производства напрямую от производителей и с крупнейших мировых складов. Реализуемая нашей компанией продукция насчитывает более полумиллиона наименований.

Благодаря этому наша компания предлагает к поставке практически не ограниченный ассортимент компонентов как оптовыми, мелкооптовыми партиями, так и в розницу.

Наличие собственной эффективной системы логистики обеспечивает надежную поставку продукции по конкурентным ценам в точно указанные сроки.

Срок поставки со стоков в **Европе и Америке – от 3 до 14 дней.**

Срок поставки из **Азии – от 10 дней.**

Благодаря развитой сети поставщиков, помогаем в поиске и приобретении экзотичных или снятых с производства компонентов.

Предоставляем спец цены на элементы для создания инженерных сэмплов.

Упорный труд, качественный результат дают нам право быть уверенными в себе и надежными для наших клиентов.

Наша компания это:

- Гарантия качества поставляемой продукции
- Широкий ассортимент
- Минимальные сроки поставок
- Техническая поддержка
- Подбор комплектации
- Индивидуальный подход
- Гибкое ценообразование

Наша организация особенно сильна в поставках модулей, микросхем, пассивных компонентов, ксайленсах (XC), EPF, EPM и силовой электроники.

Большой выбор предлагаемой продукции, различные виды оплаты и доставки, позволят Вам сэкономить время и получить максимум выгоды от сотрудничества с нами!

Trade Electronics.ru

гарантия бесперебойности производства и качества выпускаемой продукции

Перечень производителей, продукцию которых мы поставляем на российский рынок

AMD
ANALOG DEVICES
BOURNS
Coilcraft
élantec Semiconductor, Inc.
HARRIS
Infineon
JRC
MICREL
MOTOROLA
nichicon
PHILIPS
ROHM
SGS-THOMSON
Sipex
TAIYO YUDEN
TOKO
ZILOG
Winbond
Allegro
ATMEL
BURR - BROWN
EXAR
HITACHI
intel
Lattice
muRata
OKI
QUALCOMM
SAMSUNG
SHARP
SONY
TDK
TOSHIBA
KYOCERA
ALTERA
AVX
CITILYST
CYPRESS
FAIRCHILD SEMICONDUCTOR
HOLTEK
International IOR Rectifier
LINEAR TECHNOLOGY
MITSUBISHI
National Semiconductor
ON Semiconductor
REALTEK
SANYO
SHINDENGEN
SGS
TECCOR
TUNDRA
XILINX
Amphenol
Bay Linear
CIRRUS LOGIC
DALLAS
FUJITSU
IDT
intersil
MAXIM
molex
NEC
Panasonic
RENESAS
SII
SIEMENS
ST
Texas Instruments
VISHAY
ZETEX SEMICONDUCTORS

Trade Electronics.ru

гарантия бесперебойности производства и качества выпускаемой продукции

С удовольствием будем прорабатывать для Вас поставки всех необходимых компонентов по текущим запросам для скорейшего выявления групп элементов, по которым сотрудничество именно с нашей компанией будет для Вас максимально выгодным!

С уважением,

Менеджер отдела продаж ООО

«Трейд Электроникс»

Шишлаков Евгений

8 (495)668-30-28 доб 169

manager28@tradeelectronics.ru

http://www.tradeelectronics.ru/