MC14490

Hex Contact Bounce Eliminator

The MC14490 is constructed with complementary MOS enhancement mode devices, and is used for the elimination of extraneous level changes that result when interfacing with mechanical contacts. The digital contact bounce eliminator circuit takes an input signal from a bouncing contact and generates a clean digital signal four clock periods after the input has stabilized. The bounce eliminator circuit will remove bounce on both the "make" and the "break" of a contact closure. The clock for operation of the MC14490 is derived from an internal R–C oscillator which requires only an external capacitor to adjust for the desired operating frequency (bounce delay). The clock may also be driven from an external clock source or the oscillator of another MC14490 (see Figure 5).

NOTE: Immediately after powerup, the outputs of the MC14490 are in indeterminate states.

Features

- Diode Protection on All Inputs
- Six Debouncers Per Package
- Internal Pullups on All Data Inputs
- Can Be Used as a Digital Integrator, System Synchronizer, or Delay Line
- Internal Oscillator (R–C), or External Clock Source
- TTL Compatible Data Inputs/Outputs
- Single Line Input, Debounces Both "Make" and "Break" Contacts
- Does Not Require "Form C" (Single Pole Double Throw) Input Signal
- Cascadable for Longer Time Delays
- Schmitt Trigger on Clock Input (Pin 7)
- Supply Voltage Range = 3.0 V to 18 V
- Chip Complexity: 546 FETs or 136.5 Equivalent Gates
- These Devices are Pb–Free and are RoHS Compliant

MAXIMUM RATINGS (Voltages Referenced to V_{SS})

Parameter	Symbol	Value	Unit
DC Supply Voltage Range	V_{DD}	−0.5 to +18.0	V
Input or Output Voltage Range (DC or Transient)	V_{in}, V_{out}	−0.5 to V_{DD} + 0.5	V
Input Current (DC or Transient) per Pin	I_{in}	±10	mA
Power Dissipation, per Package (Note 1)	P_D	500	mW
Ambient Temperature Range	T_A	−55 to +125	°C
Storage Temperature Range	T_{stg}	−65 to +150	°C
Lead Temperature (8–Second Soldering)	T_L	260	°C

Stresses exceeding Maximum Ratings may damage the device. Maximum Ratings are stress ratings only. Functional operation above the Recommended Operating Conditions is not implied. Extended exposure to stresses above the Recommended Operating Conditions may affect device reliability.

1. Temperature Derating: Plastic "P and D/DW"
   Packages: – 7.0 mW/°C From 65°C To 125°C

This device contains protection circuitry to guard against damage due to high static voltages or electric fields. However, precautions must be taken to avoid applications of any voltage higher than maximum rated voltages to this high–impedance circuit. For proper operation, V_{in} and V_{out} should be constrained to the range $V_{SS} \leq (V_{in}$ or $V_{out}) \leq V_{DD}$.

Unused inputs must always be tied to an appropriate logic voltage level (e.g., either V_{SS} or V_{DD}). Unused outputs must be left open.

ON Semiconductor®

http://onsemi.com

MARKING DIAGRAMS

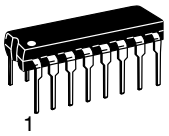

PDIP–16
P SUFFIX
CASE 648

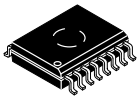

SOIC–16
DW SUFFIX
CASE 751G

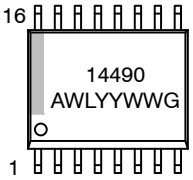

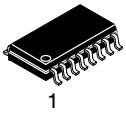

SOEIAJ–16
F SUFFIX
CASE 966

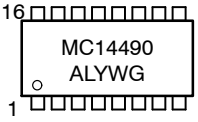

A	= Assembly Location
WL, L	= Wafer Lot
YY, Y	= Year
WW, W	= Work Week
G	= Pb–Free Package

ORDERING INFORMATION

See detailed ordering and shipping information in the package dimensions section on page 9 of this data sheet.

© Semiconductor Components Industries, LLC, 2011

June, 2011 – Rev. 9

Publication Order Number:
MC14490/D

PIN ASSIGNMENT

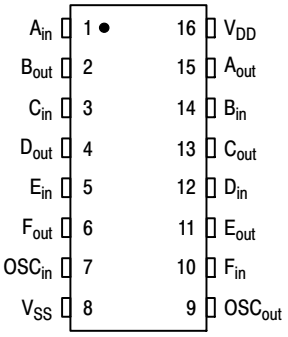

BLOCK DIAGRAM

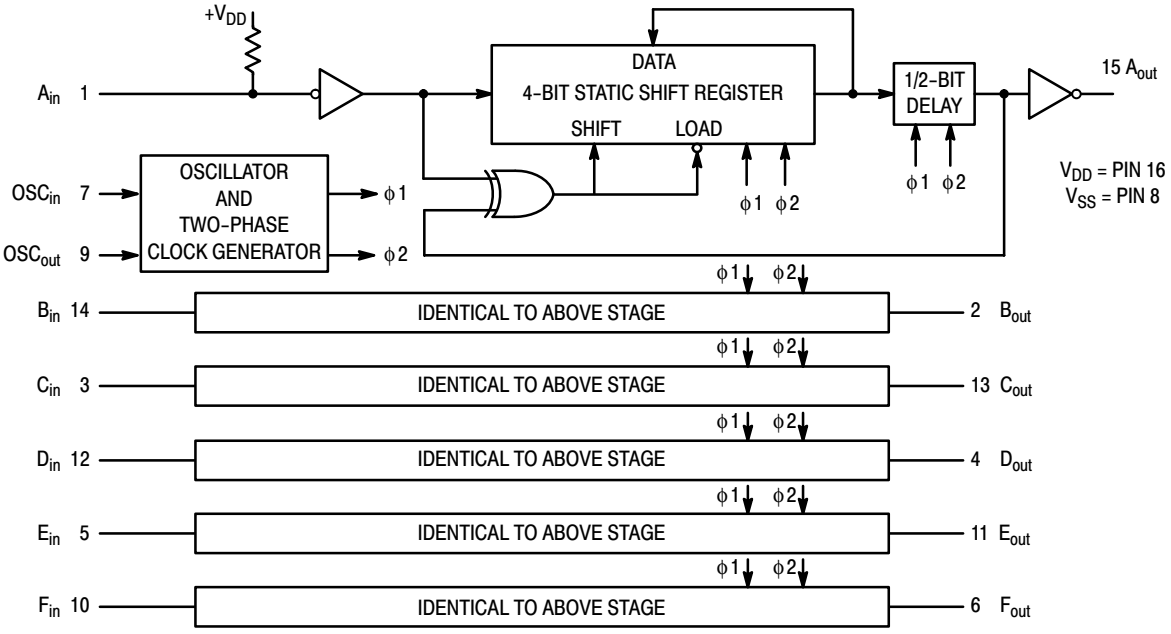

ELECTRICAL CHARACTERISTICS (Voltages Referenced to V_{SS})

Characteristic	Symbol	V_{DD} Vdc	– 55°C Min	– 55°C Max	25°C Min	25°C Typ (Note 2)	25°C Max	125°C Min	125°C Max	Unit
Output Voltage "0" Level $V_{in} = V_{DD}$ or 0	V_{OL}	5.0 10 15	– – –	0.05 0.05 0.05	– – –	0 0 0	0.05 0.05 0.05	– – –	0.05 0.05 0.05	Vdc
"1" Level $V_{in} = 0$ or V_{DD}	V_{OH}	5.0 10 15	4.95 9.95 14.95	– – –	4.95 9.95 14.95	5.0 10 15	– – –	4.95 9.95 14.95	– – –	Vdc
Input Voltage "0" Level (V_O = 4.5 or 0.5 Vdc) (V_O = 9.0 or 1.0 Vdc) (V_O = 13.5 or 1.5 Vdc)	V_{IL}	5.0 10 15	– – –	1.5 3.0 4.0	– – –	2.25 4.50 6.75	1.5 3.0 4.0	– – –	1.5 3.0 4.0	Vdc
(V_O = 0.5 or 4.5 Vdc) "1 Level" (V_O = 1.0 or 9.0 Vdc) (V_O = 1.5 or 13.5 Vdc)	V_{IH}	5.0 10 15	3.5 7.0 11	– – –	3.5 7.0 11	2.75 5.50 8.25	– – –	3.5 7.0 11	– – –	Vdc
Output Drive Current Oscillator Output Source (V_{OH} = 2.5 V) Pin 9 (V_{OH} = 4.6 V) (V_{OH} = 9.5 V) (V_{OH} = 13.5 V)	I_{OH}	5.0 5.0 10 15	– 0.6 – 0.12 – 0.23 – 1.4	– – – –	– 0.5 – 0.1 – 0.2 – 1.2	– 1.5 – 0.3 – 0.8 – 3.0	– – – –	– 0.4 – 0.08 – 0.16 – 1.0	– – – –	mAdc
Debounce Outputs (V_{OH} = 2.5 V) Pins 2, 4, 6, (V_{OH} = 4.6 V) 11, 13, 15 (V_{OH} = 9.5 V) (V_{OH} = 13.5 V)		5.0 5.0 10 15	– 0.9 – 0.19 – 0.6 1.8	– – – –	– 0.75 – 0.16 – 0.5 – 1.5	– 2.2 – 0.46 – 1.2 – 4.5	– – – –	– 0.6 – 0.12 – 0.4 – 1.2	– – – –	
Oscillator Output Sink (V_{OL} = 0.4 V) Pin 9 (V_{OL} = 0.5 V) (V_{OL} = 1.5 V)	I_{OL}	5.0 10 15	0.36 0.9 4.2	– – –	0.3 0.75 3.5	0.9 2.3 10	– – –	0.24 0.6 2.8	– – –	mAdc
Debounce Outputs (V_{OL} = 0.4 V) Pins 2, 4, 6, (V_{OL} = 0.5 V) 11, 13, 15 (V_{OL} = 1.5 V)		5.0 10 15	2.6 4.0 12	– – –	2.2 3.3 10	4.0 9.0 35	– – –	1.8 2.7 8.1	– – –	
Input Current Debounce Inputs ($V_{in} = V_{DD}$)	I_{IH}	15	–	2.0	–	0.2	2.0	–	11	μAdc
Input Current Oscillator — Pin 7 ($V_{in} = V_{SS}$ or V_{DD})	I_{in}	15	–	± 620	–	± 255	± 400	–	± 250	μAdc
Pullup Resistor Source Current Debounce Inputs ($V_{in} = V_{SS}$)	I_{IL}	5.0 10 15	210 400 600	425 840 1250	140 280 415	190 380 570	255 500 750	70 145 215	225 440 660	μAdc
Input Capacitance	C_{in}	–	–	–	–	5.0	7.5	–	–	pF
Quiescent Current ($V_{in} = V_{SS}$ or V_{DD}, I_{out} = 0 μA)	I_{SS}	5.0 10 15	– – –	150 280 840	– – –	40 90 225	100 225 650	– – –	90 180 550	μAdc

2. Data labelled "Typ" is not to be used for design purposes but is intended as an indication of the IC's potential performance.

SWITCHING CHARACTERISTICS (Note 3) (C_L = 50 pF, T_A = 25°C)

Characteristic	Symbol	V_{DD} Vdc	Min	Typ (Note 4)	Max	Unit
Output Rise Time All Outputs	t_{TLH}	5.0 10 15	– – –	180 90 65	360 180 130	ns
Output Fall Time — Oscillator Output	t_{THL}	5.0 10 15	– – –	100 50 40	200 100 80	ns
Output Fall Time — Debounce Outputs	t_{THL}	5.0 10 15	– – –	60 30 20	120 60 40	ns
Propagation Delay Time Oscillator Input to Debounce Outputs	t_{PHL}	5.0 10 15	– – –	285 120 95	570 240 190	ns
	t_{PLH}	5.0 10 15	– – –	370 160 120	740 320 240	ns
Clock Frequency (50% Duly Cycle) (External Clock)	f_{cl}	5.0 10 15	– – –	2.8 6 9	1.4 3.0 4.5	MHz
Setup Time (See Figure 1)	t_{su}	5.0 10 15	100 80 60	50 40 30	– – –	ns
Maximum External Clock Input Rise and Fall Time Oscillator Input	t_r, t_f	5.0 10 15	No Limit			ns
Oscillator Frequency OSC_{out} $C_{ext} \geq 100$ pF* Note: These equations are intended to be a design guide. Laboratory experimentation may be required. Formulas are typically ± 15% of actual frequencies.	f_{osc}, typ	5.0 10 15	$\frac{1.5}{C_{ext}\ (\text{in } \mu F)}$ $\frac{4.5}{C_{ext}\ (\text{in } \mu F)}$ $\frac{6.5}{C_{ext}\ (\text{in } \mu F)}$			Hz

3. The formulas given are for the typical characteristics only at 25°C.
4. Data labelled "Typ" is not to be used for design purposes but is intended as an indication of the IC's potential performance.

***POWER–DOWN CONSIDERATIONS**

Large values of C_{ext} may cause problems when powering down the MC14490 because of the amount of energy stored in the capacitor. When a system containing this device is powered down, the capacitor may discharge through the input protection diodes at Pin 7 or the parasitic diodes at Pin 9. Current through these internal diodes must be limited to 10 mA, therefore the turn–off time of the power supply must not be faster than $t = (V_{DD} - V_{SS}) \bullet C_{ext}/(10\ mA)$. For example, If $V_{DD} - V_{SS}$ = 15 V and C_{ext} = 1 μF, the power supply must turn off no faster than t = (15 V) • (1 μF)/10 mA = 1.5 ms. This is usually not a problem because power supplies are heavily filtered and cannot discharge at this rate.

When a more rapid decrease of the power supply to zero volts occurs, the MC14490 may sustain damage. To avoid this possibility, use external clamping diodes, D1 and D2, connected as shown in Figure 2.

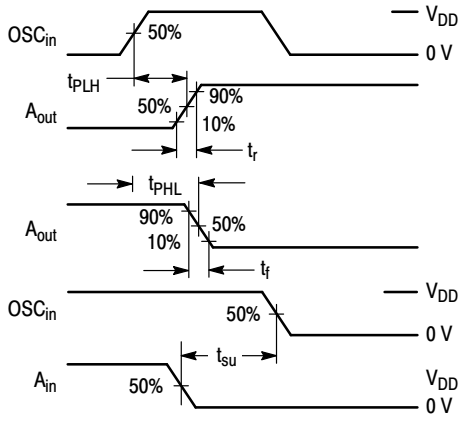

Figure 1. Switching Waveforms

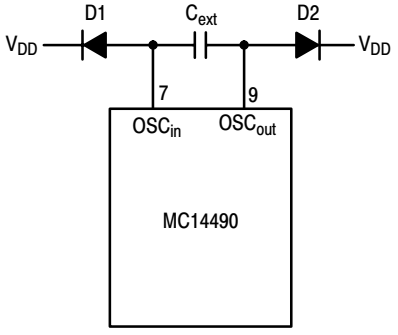

Figure 2. Discharge Protection During Power Down

THEORY OF OPERATION

The MC14490 Hex Contact Bounce Eliminator is basically a digital integrator. The circuit can integrate both up and down. This enables the circuit to eliminate bounce on both the leading and trailing edges of the signal, shown in the timing diagram of Figure 3.

Each of the six Bounce Eliminators is composed of a 4−1/2−bit register (the integrator) and logic to compare the input with the contents of the shift register, as shown in Figure 4. The shift register requires a series of timing pulses in order to shift the input signal into each shift register location. These timing pulses (the clock signal) are represented in the upper waveform of Figure 3. Each of the six Bounce Eliminator circuits has an internal resistor as shown in Figure 4. A pullup resistor was incorporated rather than a pulldown resistor in order to implement switched ground input signals, such as those coming from relay contacts and push buttons. By switching ground, rather than a power supply lead, system faults (such as shorts to ground on the signal input leads) will not cause excessive currents in the wiring and contacts. Signal lead shorts to ground are much more probable than shorts to a power supply lead.

When the relay contact is closed, (see Figure 4) the low level is inverted, and the shift register is loaded with a high on each positive edge of the clock signal. To understand the operation, we assume all bits of the shift register are loaded with lows and the output is at a high level.

At clock edge 1 (Figure 3) the input has gone low and a high has been loaded into the first bit or storage location of the shift register. Just after the positive edge of clock 1, the input signal has bounced back to a high. This causes the shift register to be reset to lows in all four bits — thus starting the timing sequence over again.

During clock edges 3 to 6 the input signal has stayed low. Thus, a high has been shifted into all four shift register bits and, as shown, the output goes low during the positive edge of clock pulse 6.

It should be noted that there is a 3−1/2 to 4−1/2 clock period delay between the clean input signal and output signal. In this example there is a delay of 3.8 clock periods from the beginning of the clean input signal.

After some time period of N clock periods, the contact is opened and at N+1 a low is loaded into the first bit. Just after N+1, when the input bounces low, all bits are set to a high. At N+2 nothing happens because the input and output are low and all bits of the shift register are high. At time N+3 and thereafter the input signal is a high, clean signal. At the positive edge of N+6 the output goes high as a result of four lows being shifted into the shift register.

Assuming the input signal is long enough to be clocked through the Bounce Eliminator, the output signal will be no longer or shorter than the clean input signal plus or minus one clock period.

The amount of time distortion between the input and output signals is a function of the difference in bounce characteristics on the edges of the input signal and the clock frequency. Since most relay contacts have more bounce when making as compared to breaking, the overall delay, counting bounce period, will be greater on the leading edge of the input signal than on the trailing edge. Thus, the output signal will be shorter than the input signal — if the leading edge bounce is included in the overall timing calculation.

The only requirement on the clock frequency in order to obtain a bounce free output signal is that four clock periods do not occur while the input signal is in a false state. Referring to Figure 3, a false state is seen to occur three times at the beginning of the input signal. The input signal goes low three times before it finally settles down to a valid low state. The first three low pulses are referred to as false states.

If the user has an available clock signal of the proper frequency, it may be used by connecting it to the oscillator input (pin 7). However, if an external clock is not available the user can place a small capacitor across the oscillator input and output pins in order to start up an internal clock source (as shown in Figure 4). The clock signal at the oscillator output pin may then be used to clock other MC14490 Bounce Eliminator packages. With the use of the MC14490, a large number of signals can be cleaned up, with the requirement of only one small capacitor external to the Hex Bounce Eliminator packages.

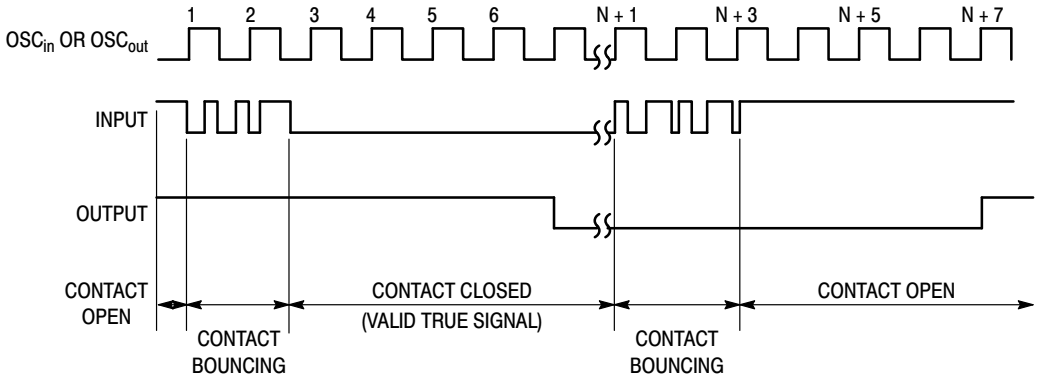

Figure 3. Timing Diagram

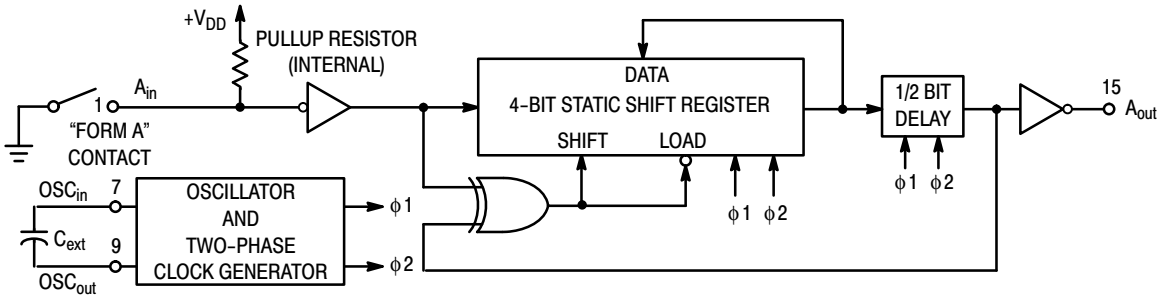

Figure 4. Typical "Form A" Contact Debounce Circuit (Only One Debouncer Shown)

OPERATING CHARACTERISTICS

The single most important characteristic of the MC14490 is that it works with a single signal lead as an input, making it directly compatible with mechanical contacts (Form A and B).

The circuit has a built−in pullup resistor on each input. The worst case value of the pullup resistor (determined from the Electrical Characteristics table) is used to calculate the contact wetting current. If more contact current is required, an external resistor may be connected between V_{DD} and the input.

Because of the built−in pullup resistors, the inputs cannot be driven with a single standard CMOS gate when V_{DD} is below 5 V. At this voltage, the input should be driven with paralleled standard gates or by the MC14049 or MC14050 buffers.

The clock input circuit (pin 7) has Schmitt trigger shaping such that proper clocking will occur even with very slow clock edges, eliminating any need for clock preshaping. In addition, other MC14490 oscillator inputs can be driven from a single oscillator output buffered by an MC14050 (see Figure 5). Up to six MC14490s may be driven by a single buffer.

The MC14490 is TTL compatible on both the inputs and the outputs. When V_{DD} is at 4.5 V, the buffered outputs can sink 1.6 mA at 0.4 V. The inputs can be driven with TTL as a result of the internal input pullup resistors.

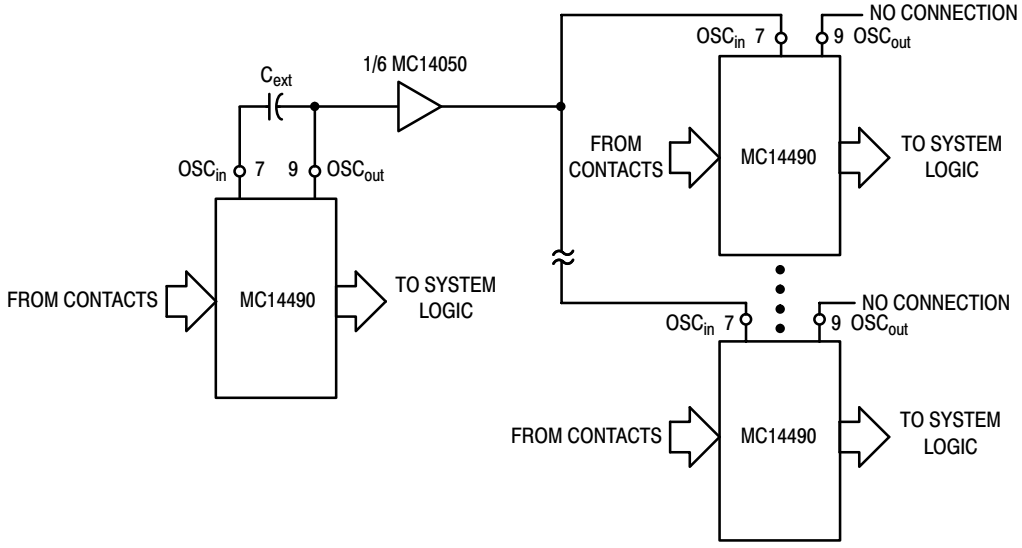

Figure 5. Typical Single Oscillator Debounce System

TYPICAL APPLICATIONS

ASYMMETRICAL TIMING

In applications where different leading and trailing edge delays are required (such as a fast attack/slow release timer.) Clocks of different frequencies can be gated into the MC14490 as shown in Figure 6. In order to produce a slow attack/fast release circuit leads A and B should be interchanged. The clock out lead can then be used to feed clock signals to the other MC14490 packages where the asymmetrical input/output timing is required.

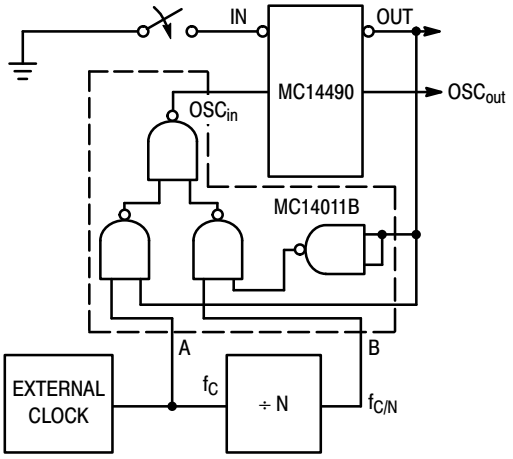

Figure 6. Fast Attack/Slow Release Circuit

LATCHED OUTPUT

The contents of the Bounce Eliminator can be latched by using several extra gates as shown in Figure 7. If the latch lead is high the clock will be stopped when the output goes low. This will hold the output low even though the input has returned to the high state. Any time the clock is stopped the outputs will be representative of the input signal four clock periods earlier.

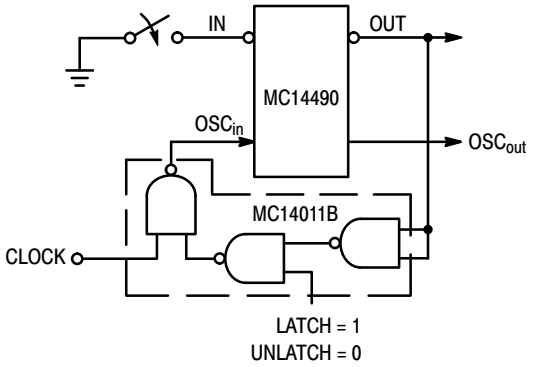

Figure 7. Latched Output Circuit

MULTIPLE TIMING SIGNALS

As shown in Figure 8, the Bounce Eliminator circuits can be connected in series. In this configuration each output is delayed by four clock periods relative to its respective input. This configuration may be used to generate multiple timing signals such as a delay line, for programming other timing operations.

One application of the above is shown in Figure 9, where it is required to have a single pulse output for a single operation (make) of the push button or relay contact. This only requires the series connection of two Bounce Eliminator circuits, one inverter, and one NOR gate in order to generate the signal $\overline{A}B$ as shown in Figures 9 and 10. The signal $\overline{A}B$ is four clock periods in length. If the inverter is switched to the A output, the pulse $\overline{A}B$ will be generated upon release or break of the contact. With the use of a few additional parts many different pulses and waveshapes may be generated.

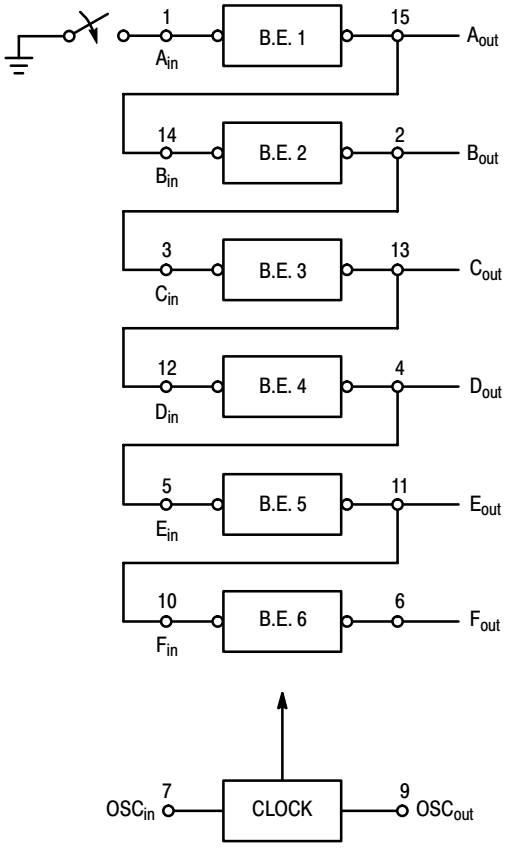

Figure 8. Multiple Timing Circuit Connections

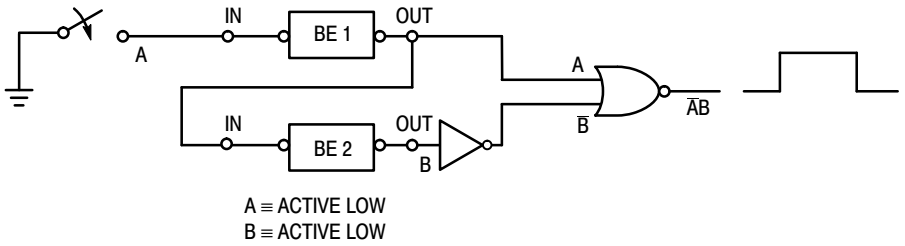

Figure 9. Single Pulse Output Circuit

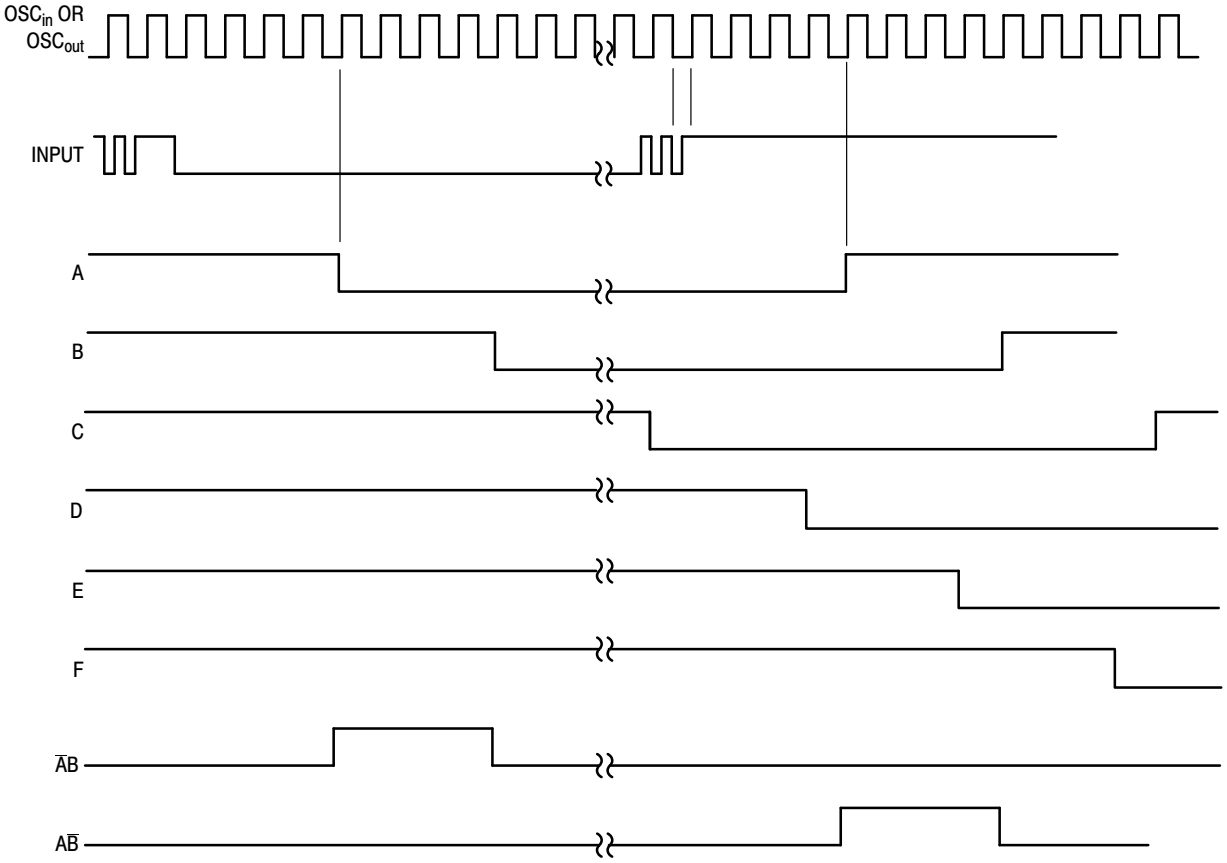

Figure 10. Multiple Output Signal Timing Diagram

ORDERING INFORMATION

Device	Package	Shipping†
MC14490DWG	SOIC−16 (Pb−Free)	47 Units / Rail
MC14490DWR2G	SOIC−16 (Pb−Free)	1000 / Tape & Reel
MC14490FG	SOEIAJ−16 (Pb−Free)	50 Units / Rail
MC14490FELG	SOEIAJ−16 (Pb−Free)	2000 Units / Tape & Reel
MC14490PG	PDIP−16 (Pb−Free)	500 Units / Rail

†For information on tape and reel specifications, including part orientation and tape sizes, please refer to our Tape and Reel Packaging Specifications Brochure, BRD8011/D.

PACKAGE DIMENSIONS

PDIP−16
CASE 648−08
ISSUE T

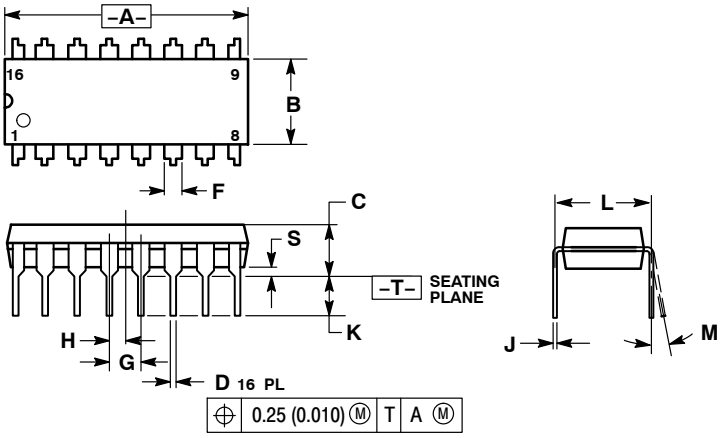

NOTES:
1. DIMENSIONING AND TOLERANCING PER ANSI Y14.5M, 1982.
2. CONTROLLING DIMENSION: INCH.
3. DIMENSION L TO CENTER OF LEADS WHEN FORMED PARALLEL.
4. DIMENSION B DOES NOT INCLUDE MOLD FLASH.
5. ROUNDED CORNERS OPTIONAL.

	INCHES		MILLIMETERS	
DIM	MIN	MAX	MIN	MAX
A	0.740	0.770	18.80	19.55
B	0.250	0.270	6.35	6.85
C	0.145	0.175	3.69	4.44
D	0.015	0.021	0.39	0.53
F	0.040	0.70	1.02	1.77
G	0.100 BSC		2.54 BSC	
H	0.050 BSC		1.27 BSC	
J	0.008	0.015	0.21	0.38
K	0.110	0.130	2.80	3.30
L	0.295	0.305	7.50	7.74
M	0 °	10 °	0 °	10 °
S	0.020	0.040	0.51	1.01

SO−16 WB
CASE 751G−03
ISSUE C

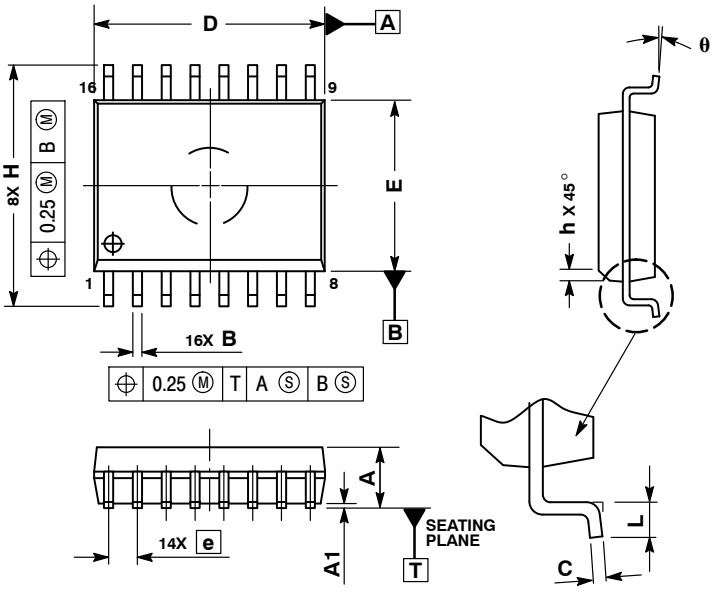

NOTES:
1. DIMENSIONS ARE IN MILLIMETERS.
2. INTERPRET DIMENSIONS AND TOLERANCES PER ASME Y14.5M, 1994.
3. DIMENSIONS D AND E DO NOT INLCUDE MOLD PROTRUSION.
4. MAXIMUM MOLD PROTRUSION 0.15 PER SIDE.
5. DIMENSION B DOES NOT INCLUDE DAMBAR PROTRUSION. ALLOWABLE DAMBAR PROTRUSION SHALL BE 0.13 TOTAL IN EXCESS OF THE B DIMENSION AT MAXIMUM MATERIAL CONDITION.

	MILLIMETERS	
DIM	MIN	MAX
A	2.35	2.65
A1	0.10	0.25
B	0.35	0.49
C	0.23	0.32
D	10.15	10.45
E	7.40	7.60
e	1.27 BSC	
H	10.05	10.55
h	0.25	0.75
L	0.50	0.90
q	0 °	7 °

PACKAGE DIMENSIONS

SOEIAJ−16
CASE 966−01
ISSUE A

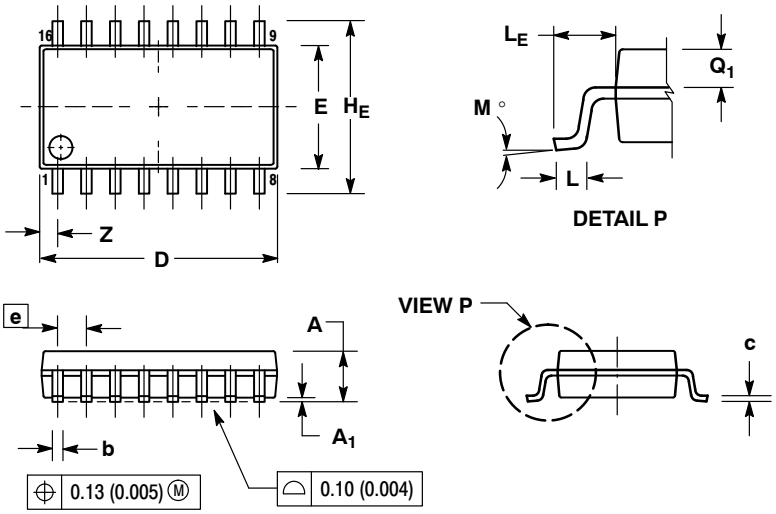

NOTES:
1. DIMENSIONING AND TOLERANCING PER ANSI Y14.5M, 1982.
2. CONTROLLING DIMENSION: MILLIMETER.
3. DIMENSIONS D AND E DO NOT INCLUDE MOLD FLASH OR PROTRUSIONS AND ARE MEASURED AT THE PARTING LINE. MOLD FLASH OR PROTRUSIONS SHALL NOT EXCEED 0.15 (0.006) PER SIDE.
4. TERMINAL NUMBERS ARE SHOWN FOR REFERENCE ONLY.
5. THE LEAD WIDTH DIMENSION (b) DOES NOT INCLUDE DAMBAR PROTRUSION. ALLOWABLE DAMBAR PROTRUSION SHALL BE 0.08 (0.003) TOTAL IN EXCESS OF THE LEAD WIDTH DIMENSION AT MAXIMUM MATERIAL CONDITION. DAMBAR CANNOT BE LOCATED ON THE LOWER RADIUS OR THE FOOT. MINIMUM SPACE BETWEEN PROTRUSIONS AND ADJACENT LEAD TO BE 0.46 (0.018).

	MILLIMETERS		INCHES	
DIM	MIN	MAX	MIN	MAX
A	−−−	2.05	−−−	0.081
A_1	0.05	0.20	0.002	0.008
b	0.35	0.50	0.014	0.020
c	0.10	0.20	0.007	0.011
D	9.90	10.50	0.390	0.413
E	5.10	5.45	0.201	0.215
e	1.27 BSC		0.050 BSC	
H_E	7.40	8.20	0.291	0.323
L	0.50	0.85	0.020	0.033
L_E	1.10	1.50	0.043	0.059
M	0 °	10 °	0 °	10 °
Q_1	0.70	0.90	0.028	0.035
Z	−−−	0.78	−−−	0.031

ON Semiconductor and ON are registered trademarks of Semiconductor Components Industries, LLC (SCILLC). SCILLC reserves the right to make changes without further notice to any products herein. SCILLC makes no warranty, representation or guarantee regarding the suitability of its products for any particular purpose, nor does SCILLC assume any liability arising out of the application or use of any product or circuit, and specifically disclaims any and all liability, including without limitation special, consequential or incidental damages. “Typical” parameters which may be provided in SCILLC data sheets and/or specifications can and do vary in different applications and actual performance may vary over time. All operating parameters, including “Typicals” must be validated for each customer application by customer’s technical experts. SCILLC does not convey any license under its patent rights nor the rights of others. SCILLC products are not designed, intended, or authorized for use as components in systems intended for surgical implant into the body, or other applications intended to support or sustain life, or for any other application in which the failure of the SCILLC product could create a situation where personal injury or death may occur. Should Buyer purchase or use SCILLC products for any such unintended or unauthorized application, Buyer shall indemnify and hold SCILLC and its officers, employees, subsidiaries, affiliates, and distributors harmless against all claims, costs, damages, and expenses, and reasonable attorney fees arising out of, directly or indirectly, any claim of personal injury or death associated with such unintended or unauthorized use, even if such claim alleges that SCILLC was negligent regarding the design or manufacture of the part. SCILLC is an Equal Opportunity/Affirmative Action Employer. This literature is subject to all applicable copyright laws and is not for resale in any manner.

PUBLICATION ORDERING INFORMATION

LITERATURE FULFILLMENT:
Literature Distribution Center for ON Semiconductor
P.O. Box 5163, Denver, Colorado 80217 USA
Phone: 303−675−2175 or 800−344−3860 Toll Free USA/Canada
Fax: 303−675−2176 or 800−344−3867 Toll Free USA/Canada
Email: orderlit@onsemi.com

N. American Technical Support: 800−282−9855 Toll Free USA/Canada
Europe, Middle East and Africa Technical Support:
Phone: 421 33 790 2910
Japan Customer Focus Center
Phone: 81−3−5773−3850

ON Semiconductor Website: **www.onsemi.com**

Order Literature: http://www.onsemi.com/orderlit

For additional information, please contact your local Sales Representative

О компании

ООО "ТрейдЭлектроникс" - это оперативные поставки широкого спектра электронных компонентов отечественного и импортного производства напрямую от производителей и с крупнейших мировых складов. Реализуемая нашей компанией продукция насчитывает более полумиллиона наименований.

Благодаря этому наша компания предлагает к поставке практически не ограниченный ассортимент компонентов как оптовыми, мелкооптовыми партиями, так и в розницу.

Наличие собственной эффективной системы логистики обеспечивает надежную поставку продукции по конкурентным ценам в точно указанные сроки.

Срок поставки со стоков в **Европе и Америке – от 3 до 14 дней.**

Срок поставки из **Азии – от 10 дней.**

Благодаря развитой сети поставщиков, помогаем в поиске и приобретении экзотичных или снятых с производства компонентов.

Предоставляем спец цены на элементы для создания инженерных сэмплов.

Упорный труд, качественный результат дают нам право быть уверенными в себе и надежными для наших клиентов.

Наша компания это:

- Гарантия качества поставляемой продукции
- Широкий ассортимент
- Минимальные сроки поставок
- Техническая поддержка
- Подбор комплектации
- Индивидуальный подход
- Гибкое ценообразование

Наша организация особенно сильна в поставках модулей, микросхем, пассивных компонентов, ксайленсах (XC), EPF, EPM и силовой электроники.

Большой выбор предлагаемой продукции, различные виды оплаты и доставки, позволят Вам сэкономить время и получить максимум выгоды от сотрудничества с нами!

Trade Electronics.ru

гарантия бесперебойности производства и качества выпускаемой продукции

Перечень производителей, продукцию которых мы поставляем на российский рынок

AMD
ANALOG DEVICES
BOURNS
Coilcraft
élantec Semiconductor, Inc.
HARRIS
Infineon
JRC
MICREL
MOTOROLA
nichicon
PHILIPS
ROHM
SGS-THOMSON
Sipex
TAIYO YUDEN
TOKO
ZILOG
Winbond
Allegro
ATMEL
BURR - BROWN
EXAR
HITACHI
intel
Lattice
muRata
OKI
QUALCOMM
SAMSUNG
SHARP
SONY
TDK
TOSHIBA
KYOCERA
ALTERA
AVX
CITILYST
CYPRESS
FAIRCHILD SEMICONDUCTOR
HOLTEK
International IOR Rectifier
LINEAR TECHNOLOGY
MITSUBISHI
National Semiconductor
ON Semiconductor
REALTEK
SANYO
SHINDENGEN
SGS
TECCOR
TUNDRA
XILINX
Amphenol
Bay Linear
CIRRUS LOGIC
DALLAS
FUJITSU
IDT
intersil
MAXIM
molex
NEC
Panasonic
RENESAS
SII
SIEMENS
ST
Texas Instruments
VISHAY
ZETEX SEMICONDUCTORS

Trade Electronics.ru

гарантия бесперебойности производства и качества выпускаемой продукции

С удовольствием будем прорабатывать для Вас поставки всех необходимых компонентов по текущим запросам для скорейшего выявления групп элементов, по которым сотрудничество именно с нашей компанией будет для Вас максимально выгодным!

С уважением,

Менеджер отдела продаж ООО

«Трейд Электроникс»

Шишлаков Евгений

8 (495)668-30-28 доб 169

manager28@tradeelectronics.ru

http://www.tradeelectronics.ru/