CS8147

10 V/5.0 V Low Dropout Dual Regulator with $\overline{\text{ENABLE}}$

The CS8147 is a 10 V/5.0 V dual output linear regulator. The 10V ±5.0% output sources 500 mA and the 5.0 V ±3% output sources 70 mA. The secondary output is inherently stable and does not require an external capacitor.

The on board $\overline{\text{ENABLE}}$ function controls the regulator's two outputs. When $\overline{\text{ENABLE}}$ is high, the regulator is placed in SLEEP mode. Both outputs are disabled and the regulator draws only 70 μA of quiescent current.

The regulator is protected against overvoltage conditions. Both outputs are protected against short circuit and thermal runaway conditions.

The CS8147 is packaged in a 5 lead TO–220 with copper tab. The copper tab can be connected to a heat sink if necessary.

Features

- Two Regulated Outputs
  - 10 V ±5.0%; 500 mA
  - 5.0 V ±3.0%; 70 mA
- 70 μA SLEEP Mode Current
- Inherently Stable Secondary Output (No Output Capacitor Required)
- Fault Protection
  - Overvoltage Shutdown
  - Reverse Battery
  - 60 V Peak Transient
  - –50 V Reverse Transient
  - Short Circuit
  - Thermal Shutdown
- CMOS Compatible ENABLE Input with Low ($I_{OUT(max)}$) Input Current

ON Semiconductor™

http://onsemi.com

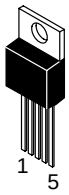

TO–220
FIVE LEAD
T SUFFIX
CASE 314D

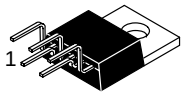

TO–220
FIVE LEAD
TVA SUFFIX
CASE 314K

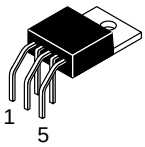

TO–220
FIVE LEAD
THA SUFFIX
CASE 314A

PIN CONNECTIONS AND MARKING DIAGRAM

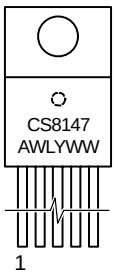

Tab = GND
Pin 1. $\overline{\text{ENABLE}}$
2. V_{IN}
3. GND
4. V_{OUT1} (10 V)
5. V_{OUT2} (5.0 V)

A = Assembly Location
WL, L = Wafer Lot
YY, Y = Year
WW, W = Work Week

ORDERING INFORMATION

Device	Package	Shipping
CS8147YT5	TO–220* STRAIGHT	50 Units/Rail
CS8147YTVA5	TO–220* VERTICAL	50 Units/Rail
CS8147YTHA5	TO–220* HORIZONTAL	50 Units/Rail

*Five lead.

© Semiconductor Components Industries, LLC, 2001

January, 2001 – Rev. 6
Publication Order Number:
CS8147/D

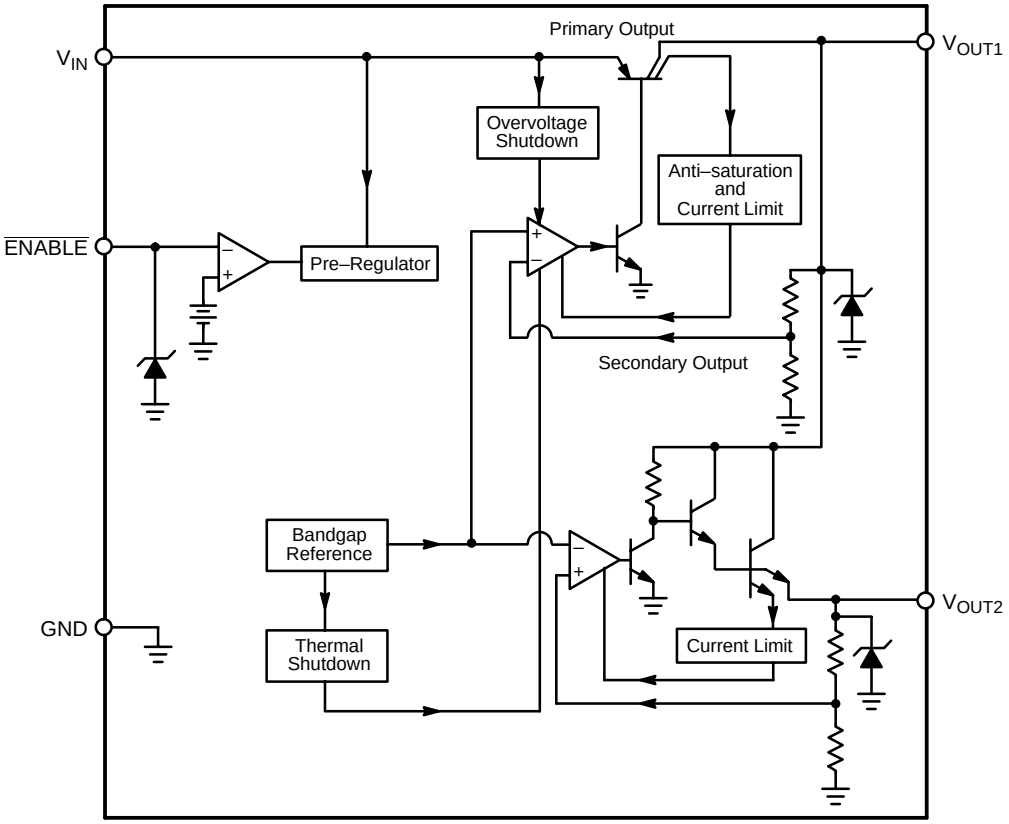

Figure 1. Block Diagram

ABSOLUTE MAXIMUM RATINGS*

Rating	Value	Unit
Input Voltage: DC	–18 to 26	V
Positive Peak Transient Voltage (Note 1.)	60	V
Negative Peak Transient Voltage	–50	V
ESD (Human Body Model)	2.0	kV
$\overline{ENABLE}$ Input	–0.3 to 10	V
Internal Power Dissipation	Internally Limited	–
Junction Temperature Range	–40 to +150	°C
Storage Temperature Range	–65 to +150	°C
Lead Temperature Soldering: Wave Solder (through hole styles only) (Note 2.)	260 peak	°C

1. 46 V Load Dump @ V_{IN} = 14 V
2. 10 second maximum.

*The maximum package power dissipation must be observed.

ELECTRICAL CHARACTERISTICS for V_{OUT}: (V_{IN} = 14 V, I_{OUT1} = I_{OUT2} = 5.0 mA, –40°C < T_J < 150°C, –40°C ≤ T_A ≤ 125°C, $\overline{ENABLE}$ = LOW; unless otherwise specified.)

Characteristic	Test Conditions	Min	Typ	Max	Unit
Primary Output (V_{OUT1})					
Output Voltage	13 V ≤ V_{IN} ≤ 26 V, I_{OUT1} ≤ 500 mA	9.50	10.00	10.5	V
Dropout Voltage	I_{OUT1} = 500 mA	–	0.5	0.7	V
Line Regulation	11 V ≤ V_{IN} ≤ 18 V, I_{OUT1} = 250 mA	–	45	90	mV
Load Regulation	5.0 mA ≤ I_{OUT1} ≤ 500 mA	–	15	75	mV
Quiescent Current	I_{OUT1} ≤ 1.0 mA, No Load on V_{OUT2}, V_{IN} = 18 V I_{OUT1} = 500 mA, No Load on V_{OUT2}, V_{IN} = 11 V	– –	3.0 60	7.0 120	mA mA
Quiescent Current	$\overline{ENABLE}$ = HIGH, V_{OUT1}, V_{OUT2} = OFF	–	70	200	μA
Current Limit	–	0.55	0.80	–	A
Long Term Stability	–	–	50	–	mV/khr
Overvoltage Shutdown	V_{OUT1} and V_{OUT2}	32	36	40	V
Secondary Output (V_{OUT2})					
Output Voltage	6.0 V ≤ V_{IN} ≤ 26 V, 1.0 mA ≤ I_{OUT2} ≤ 70 mA	4.85	5.00	5.15	V
Dropout Voltage	I_{OUT2} ≤ 70 mA	–	1.5	2.5	V
Line Regulation	11 ≤ V_{IN} ≤ 18 V, I_{OUT} = 70 μA	–	4.0	50	mV
Load Regulation	1.0 mA ≤ I_{OUT2} ≤ 70 mA, V_{IN} = 14 V	–	10	50	mV
Current Limit	–	–	150	–	mA
$\overline{ENABLE}$ Function ($\overline{ENABLE}$)					
Input $\overline{ENABLE}$ Threshold	$V_{OUT2(ON)}$ $V_{OUT1(OFF)}$	– 0.8	1.40 1.40	2.50 –	V V
Input $\overline{ENABLE}$ Current	Input Voltage Range 0 to 5.0 V	–10	–	10	μA

PACKAGE PIN DESCRIPTION

PACKAGE LEAD # 5 Lead TO–220	LEAD SYMBOL	FUNCTION
1	$\overline{ENABLE}$	CMOS compatible input lead; switches V_{OUT1} and V_{OUT2} on and off. When $\overline{ENABLE}$ is low, V_{OUT1} and V_{OUT2} are active.
2	V_{IN}	Supply voltage, usually direct from battery.
3	GND	Ground connection.
4	V_{OUT1}	Regulated output 10 V, 500 mA (typ).
5	V_{OUT2}	Secondary output 5.0 V, 70 mA (typ).

TYPICAL PERFORMANCE CHARACTERISTICS

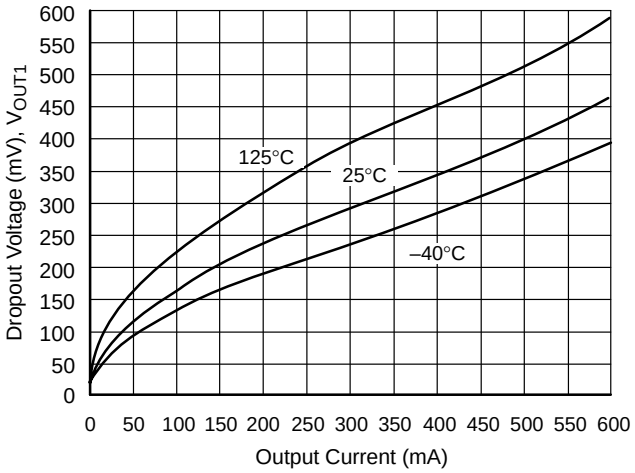

Figure 2. Dropout Voltage vs. Output Current (V_{OUT1})

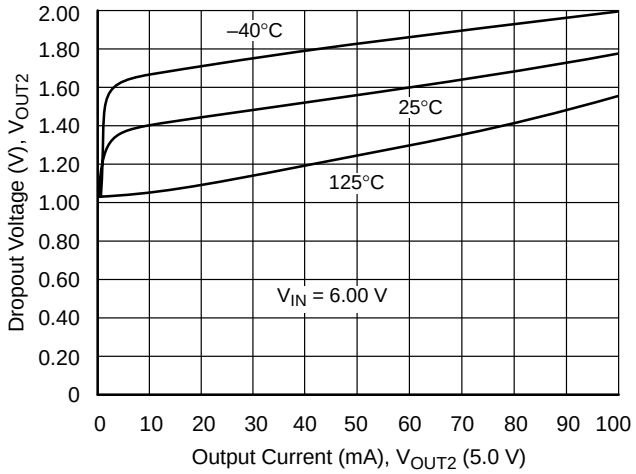

Figure 3. Dropout Voltage vs. Output Current (V_{OUT2})

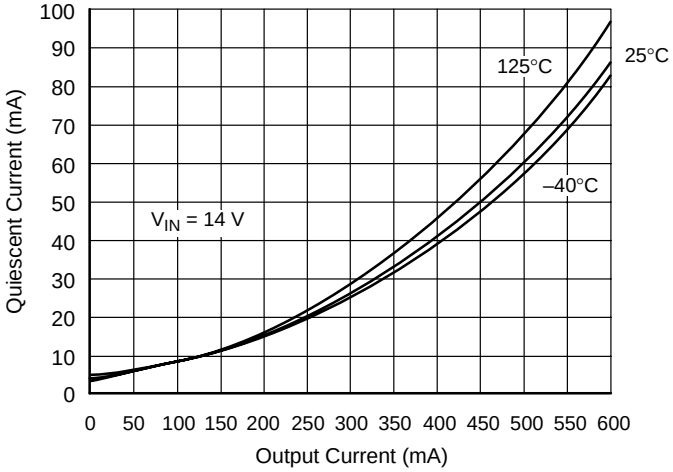

Figure 4. Quiescent Current vs. Output Current ($_{VOUT1}$)

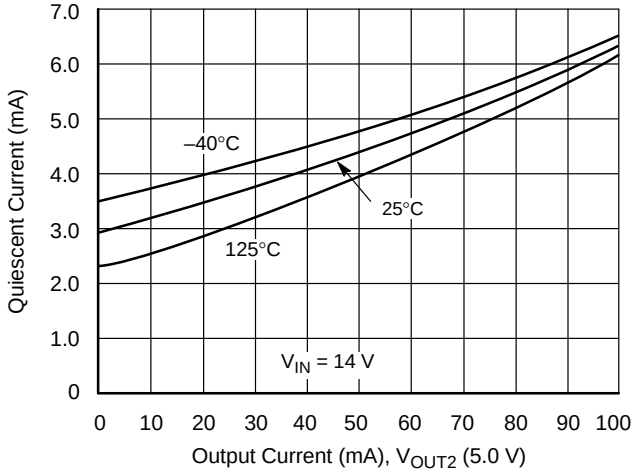

Figure 5. Quiescent Current vs. Output Current (V_{OUT2})

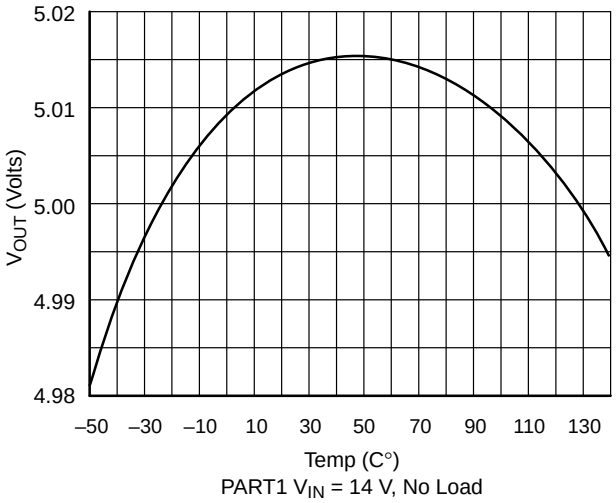

Figure 6. V_{OUT2} vs. Temperature

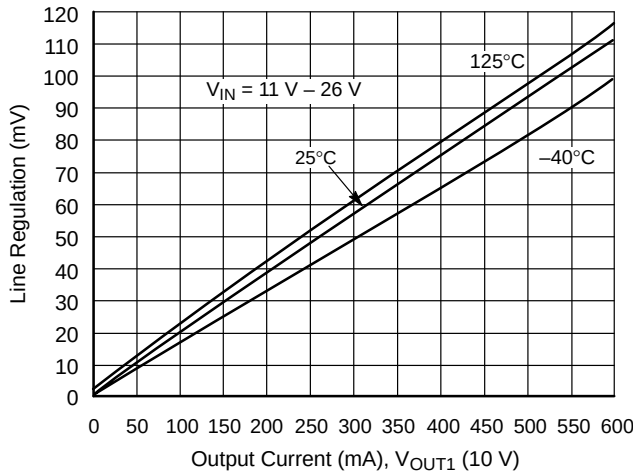

Figure 7. Line Regulation vs. Output Current (V_{OUT1})

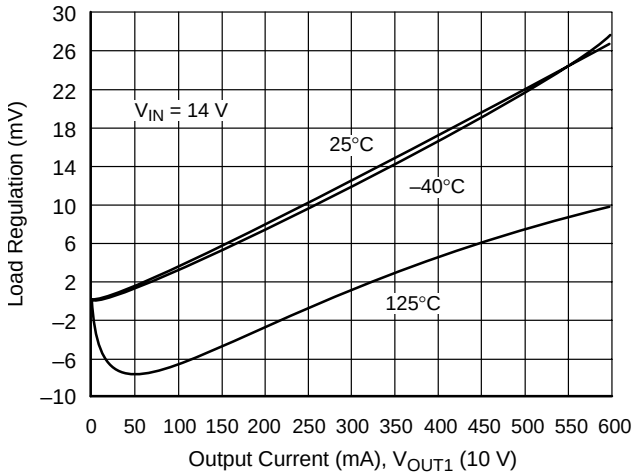

Figure 8. Load Regulation vs. Output Current (V_{OUT1})

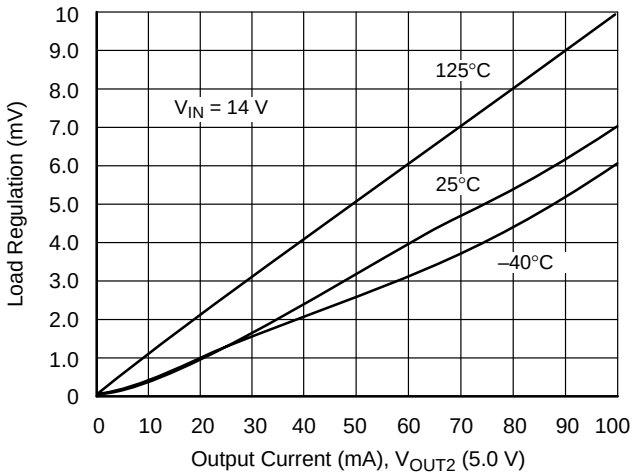

Figure 9. Load Regulation vs. Output Current (V_{OUT2})

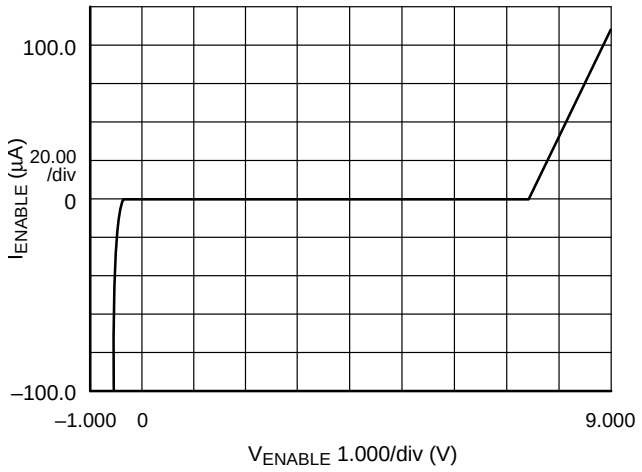

Figure 10. $\overline{\text{ENABLE}}$ Input Current vs. Input Voltage

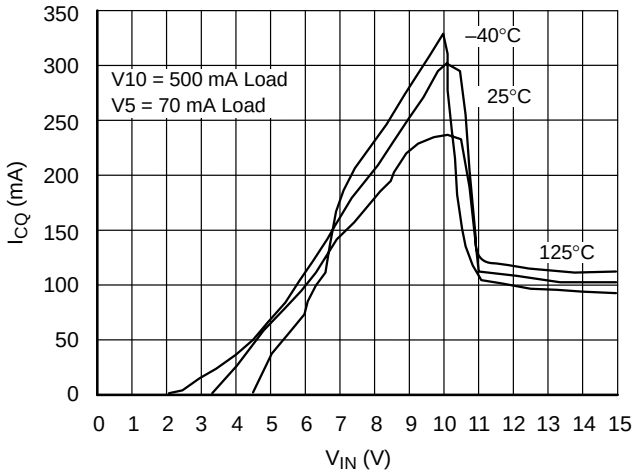

Figure 11. Quiescent Current (ICQ) vs. V_{IN} Overtemperature

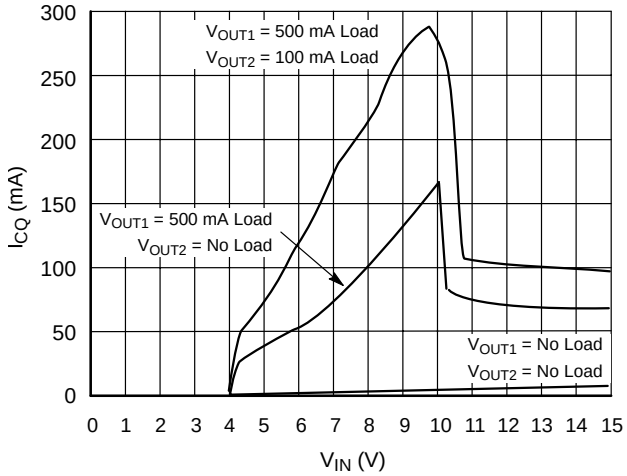

Figure 12. Quiescent Current (I_{CQ}) vs. V_{IN} Over R_{LOAD}

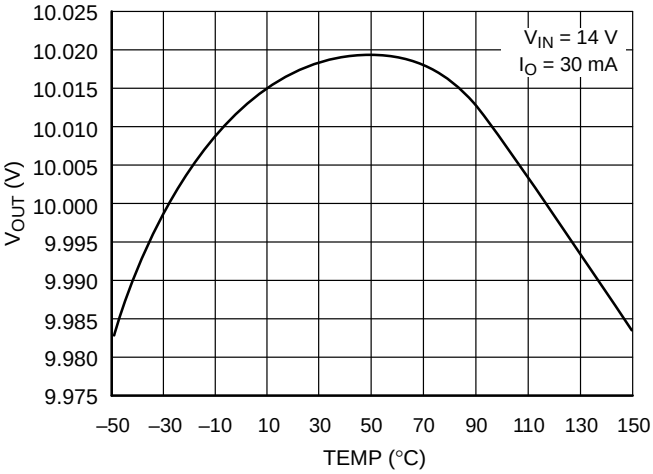

Figure 13. V_{OUT1} vs. Temperature

DEFINITION OF TERMS

Dropout Voltage – The input–output voltage differential at which the circuit ceases to regulate against further reduction in input voltage. Measured when the output voltage has dropped 100 mV from the nominal value obtained at 14 V input, dropout voltage is dependent upon load current and junction temperature.

Current Limit – Peak current that can be delivered to the output.

Input Voltage – The DC voltage applied to the input terminals with respect to ground.

Input Output Differential – The voltage difference between the unregulated input voltage and the regulated output voltage for which the regulator will operate.

Line Regulation – The change in output voltage for a change in the input voltage. The measurement is made under conditions of low dissipation or by using pulse techniques such that the average chip temperature is not significantly affected.

Load Regulation – The change in output voltage for a change in load current at constant chip temperature.

Long Term Stability – Output voltage stability under accelerated life–test conditions after 1000 hours with maximum rated voltage and junction temperature.

Output Noise Voltage – The rms AC voltage at the output, with constant load and no input ripple, measured over a specified frequency range.

Quiescent Current – The part of the positive input current that does not contribute to the positive load current. The regulator ground lead current.

Ripple Rejection – The ratio of the peak–to–peak input ripple voltage to the peak–to–peak output ripple voltage.

Temperature Stability of V_{OUT} – The percentage change in output voltage for a thermal variation from room temperature to either temperature extreme.

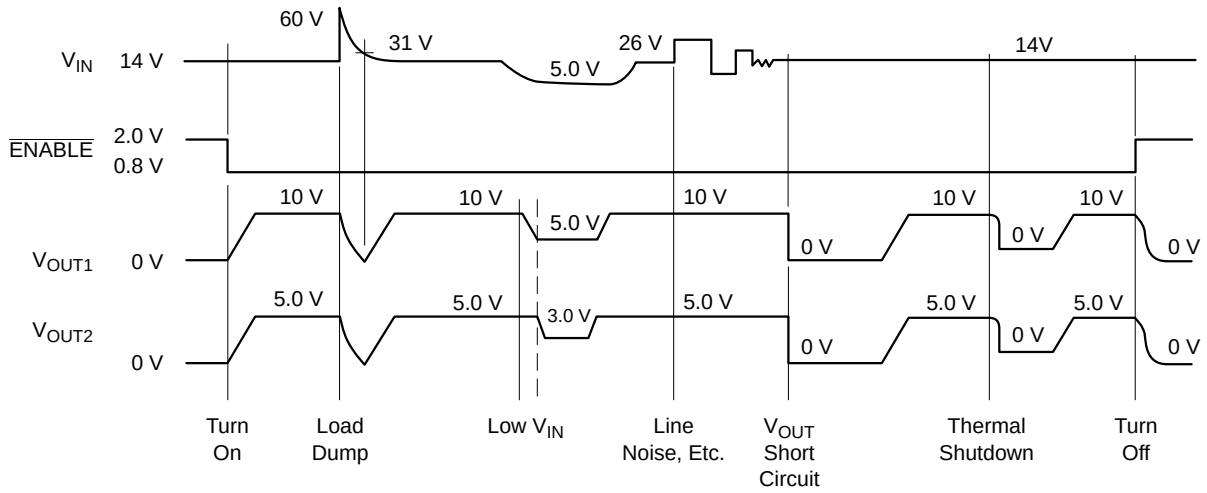

Figure 14. Typical Circuit Waveform

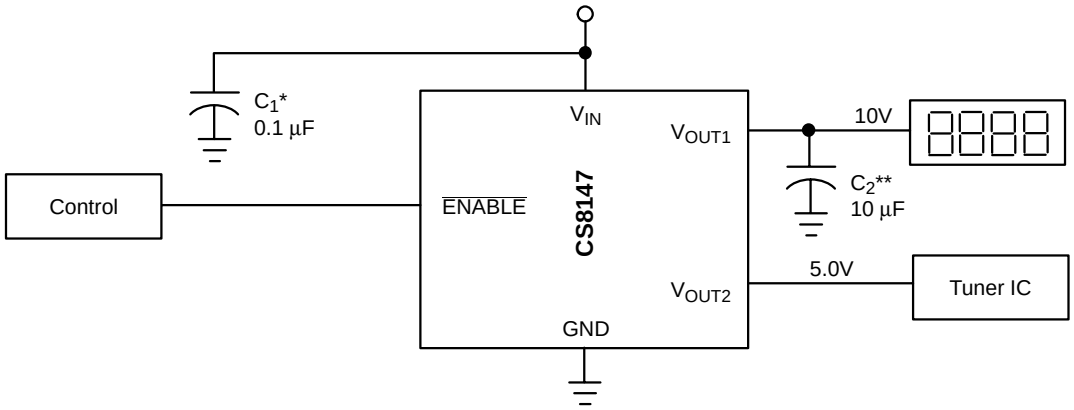

* C_1 is required if the regulator is located away from the power source filter.
** C_2 is required for stability.

Figure 15. Test & Applications Circuit

APPLICATION NOTES

Since both outputs are controlled by the same $\overline{\text{ENABLE}}$, the CS8147 is ideal for applications where a sleep mode is required. Using the CS8147, a section of circuitry such as a display and nonessential 5.0 V circuits can be shut down under microprocessor control to conserve energy.

The test applications circuit diagram shows an automotive radio application where the display is powered by 10 V from V_{OUT1} and the Tuner IC is powered by 5.0 V from V_{OUT2}. Neither output is required unless both the ignition and the Radio On/OFF switch are on.

Stability Considerations

The secondary output V_{OUT2} is inherently stable and does not require a compensation capacitor. However a compensation capacitor connected between V_{OUT1} and ground is required for stability in most applications.

The output or compensation capacitor helps determine three main characteristics of a linear regulator: start–up delay, load transient response and loop stability.

The capacitor value and type should be based on cost, availability, size and temperature constraints. A tantalum or aluminum electrolytic capacitor is best, since a film or ceramic capacitor with almost zero ESR can cause instability. The aluminum electrolytic capacitor is the least expensive solution, but, if the circuit operates at low temperatures (–25°C to –40°C), both the value and ESR of the capacitor will vary considerably. The capacitor manufacturers data sheet usually provides this information.

The value for the output capacitor C2 shown in the test and applications circuit should work for most applications, however it is not necessarily the optimized solution.

To determine acceptable value for C2 for a particular application, start with a tantalum capacitor of the recommended value and work towards a less expensive alternative part.

Step 1: Place the completed circuit with a tantalum capacitor of the recommended value in an environmental chamber at the lowest specified operating temperature and monitor the outputs with an oscilloscope. A decade box connected in series with the capacitor will simulate the higher ESR of an aluminum capacitor. Leave the decade box outside the chamber, the small resistance added by the longer leads is negligible.

Step 2: With the input voltage at its maximum value, increase the load current slowly from zero to full load while observing the output for any oscillations. If no oscillations are observed, the capacitor is large enough to ensure a stable design under steady state conditions.

Step 3: Increase the ESR of the capacitor from zero using the decade box and vary the load current until oscillations appear. Record the values of load current and ESR that cause the greatest oscillation. This represents the worst case load conditions for the regulator at low temperature.

Step 4: Maintain the worst case load conditions set in step 3 and vary the input voltage until the oscillations increase. This point represents the worst case input voltage conditions.

Step 5: If the capacitor is adequate, repeat steps 3 and 4 with the next smaller valued capacitor. A smaller capacitor will usually cost less and occupy less board space. If the output oscillates within the range of expected operating conditions, repeat steps 3 and 4 with the next larger standard capacitor value.

Step 6: Test the load transient response by switching in various loads at several frequencies to simulate its real working environment. Vary the ESR to reduce ringing.

Step 7: Raise the temperature to the highest specified operating temperature. Vary the load current as instructed in step 5 to test for any oscillations.

Once the minimum capacitor value with the maximum ESR is found for each output, a safety factor should be added to allow for the tolerance of the capacitor and any variations in regulator performance. Most good quality aluminum electrolytic capacitors have a tolerance of ±20% so the minimum value found should be increased by at least 50% to allow for this tolerance plus the variation which will occur at low temperatures. The ESR of the capacitors should be less than 50% of the maximum allowable ESR found in step 3 above.

Calculating Power Dissipation in a Dual Output Linear Regulator

The maximum power dissipation for a dual output regulator (Figure 16) is

$$P_{D(max)} = \{V_{IN(max)} - V_{OUT1(min)}\}I_{OUT1(max)} + \{V_{IN(max)} - V_{OUT2(min)}\}I_{OUT2(max)} + V_{IN(max)}I_Q \quad (1)$$

where:

$V_{IN(max)}$ is the maximum input voltage,

$V_{OUT1(min)}$ is the minimum output voltage from V_{OUT1},

$V_{OUT2(min)}$ is the minimum output voltage from V_{OUT2},

$I_{OUT1(max)}$ is the maximum output current, for the application,

$I_{OUT2(max)}$ is the maximum output current, for the application, and

I_Q is the quiescent current the regulator consumes at $I_{OUT(max)}$.

Once the value of $P_{D(max)}$ is known, the maximum permissible value of $R_{\Theta JA}$ can be calculated:

$$R_{\Theta JA} = \frac{150^\circ C - T_A}{P_D} \quad (2)$$

The value of $R_{\Theta JA}$ can be compared with those in the package section of the data sheet. Those packages with $R_{\Theta JA}$'s less than the calculated value in equation 2 will keep the die temperature below 150°C.

In some cases, none of the packages will be sufficient to dissipate the heat generated by the IC, and an external heatsink will be required.

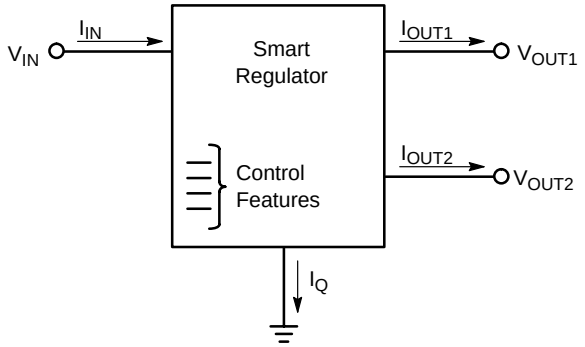

Figure 16. Dual Output Regulator With Key Performance Parameters Labeled.

Heat Sinks

A heat sink effectively increases the surface area of the package to improve the flow of heat away from the IC and into the surrounding air.

Each material in the heat flow path between the IC and the outside environment will have a thermal resistance. Like series electrical resistances, these resistances are summed to determine the value of $R_{\Theta JA}$:

$$R_{\Theta JA} = R_{\Theta JC} + R_{\Theta CS} + R_{\Theta SA} \quad (3)$$

where:

$R_{\Theta JC}$ = the junction–to–case thermal resistance,
$R_{\Theta CS}$ = the case–to–heatsink thermal resistance, and
$R_{\Theta SA}$ = the heatsink–to–ambient thermal resistance.

$R_{\Theta JC}$ appears in the package section of the data sheet. Like $R_{\Theta JA}$, it too is a function of package type. $R_{\Theta CS}$ and $R_{\Theta SA}$ are functions of the package type, heatsink and the interface between them. These values appear in heat sink data sheets of heat sink manufacturers.

PACKAGE DIMENSIONS

TO−220
FIVE LEAD
T SUFFIX
CASE 314D−04
ISSUE E

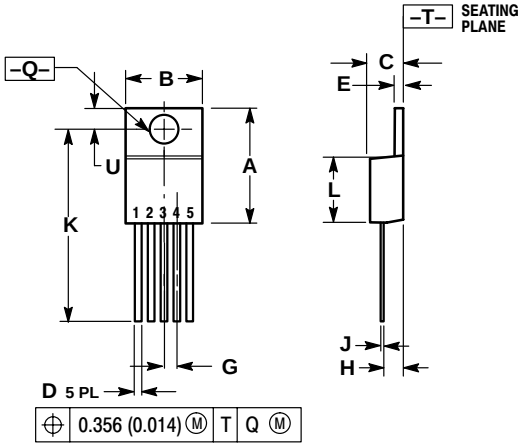

NOTES:
1. DIMENSIONING AND TOLERANCING PER ANSI Y14.5M, 1982.
2. CONTROLLING DIMENSION: INCH.
3. DIMENSION D DOES NOT INCLUDE INTERCONNECT BAR (DAMBAR) PROTRUSION. DIMENSION D INCLUDING PROTRUSION SHALL NOT EXCEED 10.92 (0.043) MAXIMUM.

	INCHES		MILLIMETERS	
DIM	MIN	MAX	MIN	MAX
A	0.572	0.613	14.529	15.570
B	0.390	0.415	9.906	10.541
C	0.170	0.180	4.318	4.572
D	0.025	0.038	0.635	0.965
E	0.048	0.055	1.219	1.397
G	0.067 BSC		1.702 BSC	
H	0.087	0.112	2.210	2.845
J	0.015	0.025	0.381	0.635
K	0.990	1.045	25.146	26.543
L	0.320	0.365	8.128	9.271
Q	0.140	0.153	3.556	3.886
U	0.105	0.117	2.667	2.972

TO−220
FIVE LEAD
TVA SUFFIX
CASE 314K−01
ISSUE O

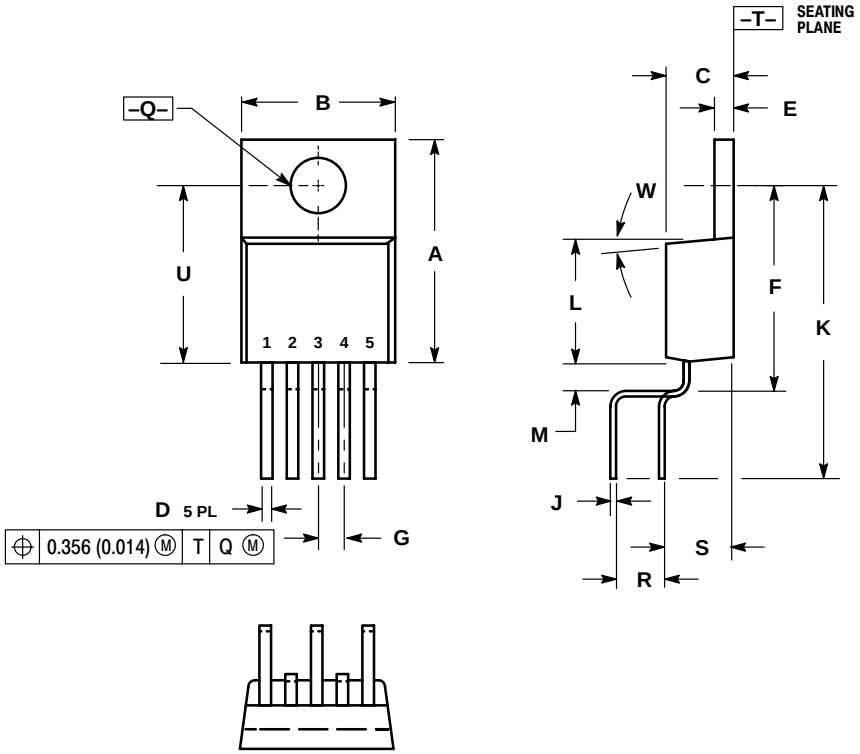

NOTES:
1. DIMENSIONING AND TOLERANCING PER ANSI Y14.5M, 1982.
2. CONTROLLING DIMENSION: INCH.
3. DIMENSION D DOES NOT INCLUDE INTERCONNECT BAR (DAMBAR) PROTRUSION. DIMENSION D INCLUDING PROTRUSION SHALL NOT EXCEED 10.92 (0.043) MAXIMUM.

	INCHES		MILLIMETERS	
DIM	MIN	MAX	MIN	MAX
A	0.560	0.590	14.22	14.99
B	0.385	0.415	9.78	10.54
C	0.160	0.190	4.06	4.83
D	0.027	0.037	0.69	0.94
E	0.045	0.055	1.14	1.40
F	0.530	0.545	13.46	13.84
G	0.067 BSC		1.70 BSC	
J	0.014	0.022	0.36	0.56
K	0.785	0.800	19.94	20.32
L	0.321	0.337	8.15	8.56
M	0.063	0.078	1.60	1.98
Q	0.146	0.156	3.71	3.96
R	0.271	0.321	6.88	8.15
S	0.146	0.196	3.71	4.98
U	0.460	0.475	11.68	12.07
W	5 °		5 °	

TO–220
FIVE LEAD
THA SUFFIX
CASE 314A–03
ISSUE E

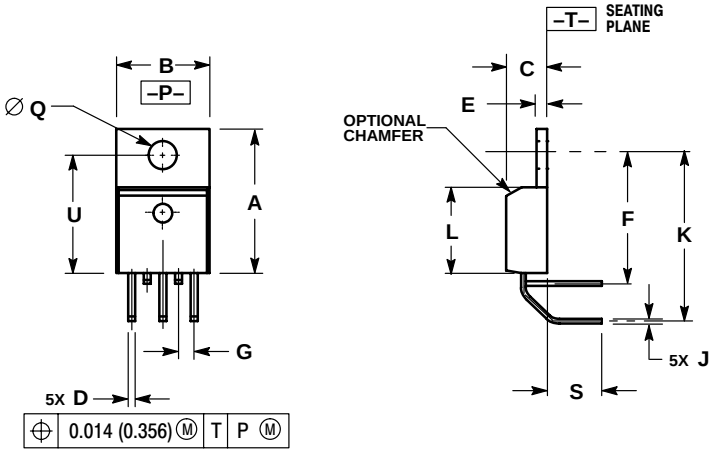

NOTES:
1. DIMENSIONING AND TOLERANCING PER ANSI Y14.5M, 1982.
2. CONTROLLING DIMENSION: INCH.
3. DIMENSION D DOES NOT INCLUDE INTERCONNECT BAR (DAMBAR) PROTRUSION. DIMENSION D INCLUDING PROTRUSION SHALL NOT EXCEED 0.043 (1.092) MAXIMUM.

	INCHES		MILLIMETERS	
DIM	MIN	MAX	MIN	MAX
A	0.572	0.613	14.529	15.570
B	0.390	0.415	9.906	10.541
C	0.170	0.180	4.318	4.572
D	0.025	0.038	0.635	0.965
E	0.048	0.055	1.219	1.397
F	0.570	0.585	14.478	14.859
G	0.067 BSC		1.702 BSC	
J	0.015	0.025	0.381	0.635
K	0.730	0.745	18.542	18.923
L	0.320	0.365	8.128	9.271
Q	0.140	0.153	3.556	3.886
S	0.210	0.260	5.334	6.604
U	0.468	0.505	11.888	12.827

PACKAGE THERMAL DATA

Parameter		TO–220	Unit
$R_{\Theta JC}$	Typical	2.4	°C/W
$R_{\Theta JA}$	Typical	50	°C/W

Notes

ON Semiconductor and are trademarks of Semiconductor Components Industries, LLC (SCILLC). SCILLC reserves the right to make changes without further notice to any products herein. SCILLC makes no warranty, representation or guarantee regarding the suitability of its products for any particular purpose, nor does SCILLC assume any liability arising out of the application or use of any product or circuit, and specifically disclaims any and all liability, including without limitation special, consequential or incidental damages. "Typical" parameters which may be provided in SCILLC data sheets and/or specifications can and do vary in different applications and actual performance may vary over time. All operating parameters, including "Typicals" must be validated for each customer application by customer's technical experts. SCILLC does not convey any license under its patent rights nor the rights of others. SCILLC products are not designed, intended, or authorized for use as components in systems intended for surgical implant into the body, or other applications intended to support or sustain life, or for any other application in which the failure of the SCILLC product could create a situation where personal injury or death may occur. Should Buyer purchase or use SCILLC products for any such unintended or unauthorized application, Buyer shall indemnify and hold SCILLC and its officers, employees, subsidiaries, affiliates, and distributors harmless against all claims, costs, damages, and expenses, and reasonable attorney fees arising out of, directly or indirectly, any claim of personal injury or death associated with such unintended or unauthorized use, even if such claim alleges that SCILLC was negligent regarding the design or manufacture of the part. SCILLC is an Equal Opportunity/Affirmative Action Employer.

PUBLICATION ORDERING INFORMATION

NORTH AMERICA Literature Fulfillment:
Literature Distribution Center for ON Semiconductor
P.O. Box 5163, Denver, Colorado 80217 USA
Phone: 303–675–2175 or 800–344–3860 Toll Free USA/Canada
Fax: 303–675–2176 or 800–344–3867 Toll Free USA/Canada
Email: ONlit@hibbertco.com
Fax Response Line: 303–675–2167 or 800–344–3810 Toll Free USA/Canada

N. American Technical Support: 800–282–9855 Toll Free USA/Canada

EUROPE: LDC for ON Semiconductor – European Support
German Phone: (+1) 303–308–7140 (Mon–Fri 2:30pm to 7:00pm CET)
Email: ONlit–german@hibbertco.com
French Phone: (+1) 303–308–7141 (Mon–Fri 2:00pm to 7:00pm CET)
Email: ONlit–french@hibbertco.com
English Phone: (+1) 303–308–7142 (Mon–Fri 12:00pm to 5:00pm GMT)
Email: ONlit@hibbertco.com

EUROPEAN TOLL–FREE ACCESS*: 00–800–4422–3781
*Available from Germany, France, Italy, UK, Ireland

CENTRAL/SOUTH AMERICA:
Spanish Phone: 303–308–7143 (Mon–Fri 8:00am to 5:00pm MST)
Email: ONlit–spanish@hibbertco.com

ASIA/PACIFIC: LDC for ON Semiconductor – Asia Support
Phone: 303–675–2121 (Tue–Fri 9:00am to 1:00pm, Hong Kong Time)
Toll Free from Hong Kong & Singapore:
001–800–4422–3781
Email: ONlit–asia@hibbertco.com

JAPAN: ON Semiconductor, Japan Customer Focus Center
4–32–1 Nishi–Gotanda, Shinagawa–ku, Tokyo, Japan 141–0031
Phone: 81–3–5740–2745
Email: r14525@onsemi.com

ON Semiconductor Website: http://onsemi.com

For additional information, please contact your local Sales Representative.

О компании

ООО "ТрейдЭлектроникс" - это оперативные поставки широкого спектра электронных компонентов отечественного и импортного производства напрямую от производителей и с крупнейших мировых складов. Реализуемая нашей компанией продукция насчитывает более полумиллиона наименований.

Благодаря этому наша компания предлагает к поставке практически не ограниченный ассортимент компонентов как оптовыми, мелкооптовыми партиями, так и в розницу.

Наличие собственной эффективной системы логистики обеспечивает надежную поставку продукции по конкурентным ценам в точно указанные сроки.

Срок поставки со стоков в **Европе и Америке – от 3 до 14 дней.**

Срок поставки из **Азии – от 10 дней.**

Благодаря развитой сети поставщиков, помогаем в поиске и приобретении экзотичных или снятых с производства компонентов.

Предоставляем спец цены на элементы для создания инженерных сэмплов.

Упорный труд, качественный результат дают нам право быть уверенными в себе и надежными для наших клиентов.

Наша компания это:

- Гарантия качества поставляемой продукции
- Широкий ассортимент
- Минимальные сроки поставок
- Техническая поддержка
- Подбор комплектации
- Индивидуальный подход
- Гибкое ценообразование

Наша организация особенно сильна в поставках модулей, микросхем, пассивных компонентов, ксайленсах (XC), EPF, EPM и силовой электроники.

Большой выбор предлагаемой продукции, различные виды оплаты и доставки, позволят Вам сэкономить время и получить максимум выгоды от сотрудничества с нами!

Trade Electronics.ru

гарантия бесперебойности производства и качества выпускаемой продукции

Перечень производителей, продукцию которых мы поставляем на российский рынок

AMD
ANALOG DEVICES
BOURNS
Coilcraft
élantec Semiconductor, Inc.
HARRIS
Infineon
JRC
MICREL
MOTOROLA
nichicon
PHILIPS
ROHM
SGS-THOMSON
Sipex
TAIYO YUDEN
TOKO
ZILOG
Winbond
Allegro
ATMEL
BURR - BROWN
EXAR
HITACHI
intel
Lattice
muRata
OKI
QUALCOMM
SAMSUNG
SHARP
SONY
TDK
TOSHIBA
KYOCERA
ALTERA
AVX
CITILYST
CYPRESS
FAIRCHILD SEMICONDUCTOR
HOLTEK
International IOR Rectifier
LINEAR TECHNOLOGY
MITSUBISHI
National Semiconductor
ON Semiconductor
REALTEK
SANYO
SHINDENGEN
SGS
TECCOR
TUNDRA
XILINX
Amphenol
Bay Linear
CIRRUS LOGIC
DALLAS
FUJITSU
IDT
intersil
MAXIM
molex
NEC
Panasonic
RENESAS
SII
SIEMENS
ST
Texas Instruments
VISHAY
ZETEX SEMICONDUCTORS

Trade Electronics.ru

гарантия бесперебойности производства и качества выпускаемой продукции

С удовольствием будем прорабатывать для Вас поставки всех необходимых компонентов по текущим запросам для скорейшего выявления групп элементов, по которым сотрудничество именно с нашей компанией будет для Вас максимально выгодным!

С уважением,

Менеджер отдела продаж ООО

«Трейд Электроникс»

Шишлаков Евгений

8 (495)668-30-28 доб 169

manager28@tradeelectronics.ru

http://www.tradeelectronics.ru/