FAIRCHILD SEMICONDUCTOR®

May 2007

74VHCT138A
3-to-8 Decoder/Demultiplexer

Features

- High Speed: t_{PD} = 7.6ns (Typ.) at V_{CC} = 5V
- Low power dissipation: I_{CC} = 4μA (Max.) at T_A = 25°C
- Power down protection is provided on all inputs and outputs
- Pin and function compatible with 74HCT138

General Description

The VHCT138A is an advanced high speed CMOS 3-to-8 DECODER fabricated with silicon gate CMOS technology. It achieves the high speed operation similar to equivalent Bipolar Schottky TTL while maintaining the CMOS low power dissipation.

When the device is enabled, 3 Binary Select inputs (A_0, A_1 and A_2) determine which one of the outputs ($\overline{O}_0$–$\overline{O}_7$) will go LOW. When enable input E_3 is held LOW or either $\overline{E}_1$ or $\overline{E}_2$ is held HIGH, decoding function is inhibited and all outputs go HIGH. E_3, $\overline{E}_1$ and $\overline{E}_2$ inputs are provided to ease cascade connection and for use as an address decoder for memory systems. Protection circuits ensure that 0V to 7V can be applied to the input pins without regard to the supply voltage and to the output pins with V_{CC} = 0V. These circuits prevent device destruction due to mismatched supply and input/output voltages. This device can be used to interface 3V to 5V systems and two supply systems such as battery backup.

Ordering Information

Order Number	Package Number	Package Description
74VHCT138AM	M16A	16-Lead Small Outline Integrated Circuit (SOIC), JEDEC MS-012, 0.150" Narrow
74VHCT138ASJ	M16D	16-Lead Small Outline Package (SOP), EIAJ TYPE II, 5.3mm Wide
74VHCT138AMTC	MTC16	16-Lead Thin Shrink Small Outline Package (TSSOP), JEDEC MO-153, 4.4mm Wide

Surface mount packages are also available on Tape and Reel. Specify by appending the suffix letter “X” to the ordering number.

©1993 Fairchild Semiconductor Corporation

Connection Diagram

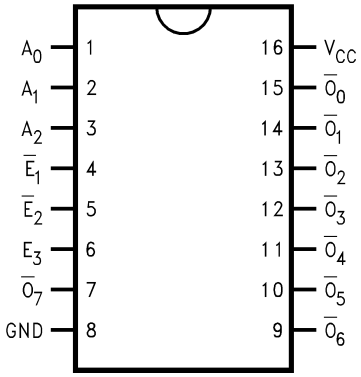

Logic Symbols

IEEE/IEC

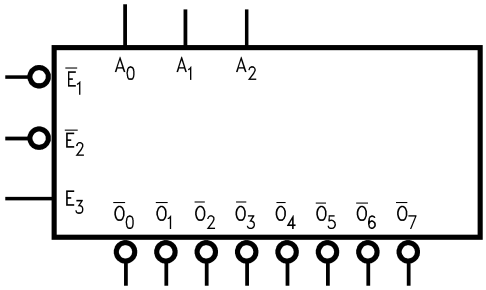

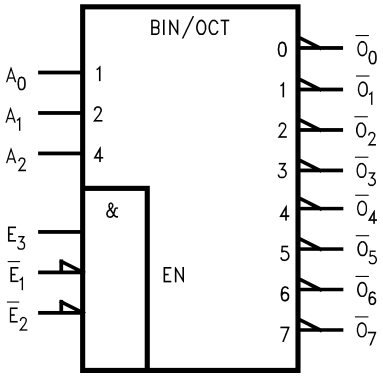

Pin Description

Pin Names	Description
A_0–A_2	Address Inputs
$\overline{E}_1$–$\overline{E}_2$	Enable Inputs
E_3	Enable Input
$\overline{O}_0$–$\overline{O}_7$	Outputs

Truth Table

Inputs						Outputs							
$\overline{E}_1$	$\overline{E}_2$	E_3	A_0	A_1	A_2	$\overline{O}_0$	$\overline{O}_1$	$\overline{O}_2$	$\overline{O}_3$	$\overline{O}_4$	$\overline{O}_5$	$\overline{O}_6$	$\overline{O}_7$
H	X	X	X	X	X	H	H	H	H	H	H	H	H
X	H	X	X	X	X	H	H	H	H	H	H	H	H
X	X	L	X	X	X	H	H	H	H	H	H	H	H
L	L	H	L	L	L	L	H	H	H	H	H	H	H
L	L	H	H	L	L	H	L	H	H	H	H	H	H
L	L	H	L	H	L	H	H	L	H	H	H	H	H
L	L	H	H	H	L	H	H	H	L	H	H	H	H
L	L	H	L	L	H	H	H	H	H	L	H	H	H
L	L	H	H	L	H	H	H	H	H	H	L	H	H
L	L	H	L	H	H	H	H	H	H	H	H	L	H
L	L	H	H	H	H	H	H	H	H	H	H	H	L

H = HIGH Voltage Level

L = LOW Voltage Level

X = Immaterial

©1993 Fairchild Semiconductor Corporation

Logic Diagram

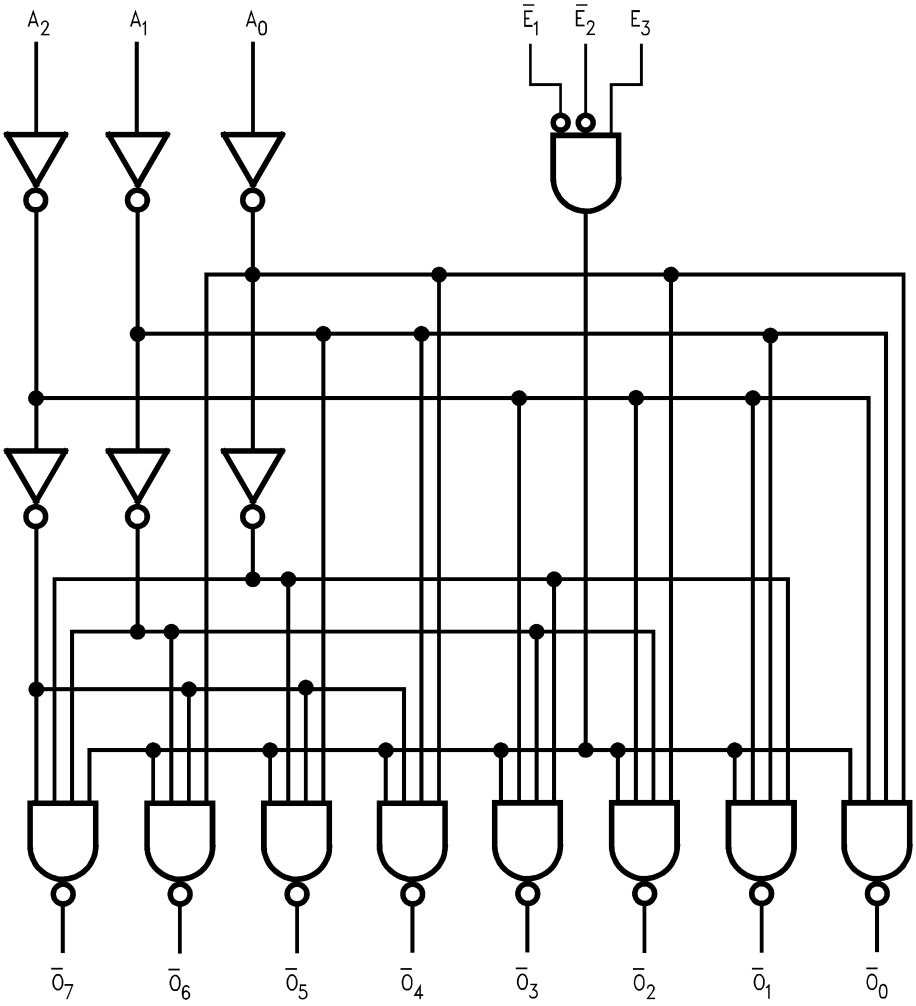

Please note that this diagram is provided only for the understanding of logic operations and should not be used to estimate propagation delays.

Absolute Maximum Ratings

Stresses exceeding the absolute maximum ratings may damage the device. The device may not function or be operable above the recommended operating conditions and stressing the parts to these levels is not recommended. In addition, extended exposure to stresses above the recommended operating conditions may affect device reliability. The absolute maximum ratings are stress ratings only.

Symbol	Parameter	Rating
V_{CC}	Supply Voltage	–0.5V to +7.0V
V_{IN}	DC Input Voltage	–0.5V to +7.0V
V_{OUT}	DC Output Voltage	
	Note 1	–0.5V to 7.0V
	Note 2	–0.5V to V_{CC} + 0.5V
I_{IK}	Input Diode Current	–20mA
I_{OK}	Output Diode Current(3)	±20mA
I_{OUT}	DC Output Current	±25mA
I_{CC}	DC V_{CC} / GND Current	±75mA
T_{STG}	Storage Temperature	–65°C to +150°C
T_L	Lead Temperature (Soldering, 10 seconds)	260°C

Recommended Operating Conditions(4)

The Recommended Operating Conditions table defines the conditions for actual device operation. Recommended operating conditions are specified to ensure optimal performance to the datasheet specifications. Fairchild does not recommend exceeding them or designing to absolute maximum ratings.

Symbol	Parameter	Rating
V_{CC}	Supply Voltage	4.5V to +5.5V
V_{IN}	Input Voltage	0V to +5.5V
V_{OUT}	Output Voltage	
	Note 1	0V to 5.5V
	Note 2	0V to V_{CC}
T_{OPR}	Operating Temperature	–40°C to +85°C
t_r, t_f	Input Rise and Fall Time, V_{CC} = 5.0V ±0.5V	0 ~ 20ns/V

Notes:

1. V_{CC} = 0V.
2. HIGH or LOW state. I_{OUT} absolute maximum rating must be observed.
3. V_{OUT} < GND, V_{OUT} > V_{CC} (Outputs Active).
4. Unused inputs must be held HIGH or LOW. They may not float.

DC Electrical Characteristics

Symbol	Parameter	V_{CC} (V)	Conditions		$T_A = 25°C$ Min.	Typ.	Max.	$T_A = -40°C$ to $+85°C$ Min.	Max.	Units
V_{IH}	HIGH Level Input Voltage	4.5 – 5.5			2.0			2.0		V
V_{IL}	LOW Level Input Voltage	4.5 – 5.5					0.8		0.8	V
V_{OH}	HIGH Level Output Voltage	4.5	$V_{IN} = V_{IH}$ or V_{IL}	$I_{OH} = -50\mu A$	4.4	4.5		4.4		V
				$I_{OH} = -8mA$	3.94			3.80		
V_{OL}	LOW Level Output Voltage	4.5	$V_{IN} = V_{IH}$ or V_{IL}	$I_{OL} = 50\mu A$		0.0	0.1		0.1	V
				$I_{OL} = 8mA$			0.36		0.44	
I_{IN}	Input Leakage Current	0 – 5.5	$V_{IN} = 5.5V$ or GND				±0.1		±1.0	μA
I_{CC}	Quiescent Supply Current	5.5	$V_{IN} = V_{CC}$ or GND				4.0		20.0	μA
I_{CCT}	Maximum I_{CC}/Input	5.5	$V_{IN} = 3.4V$, All other inputs = V_{CC} or GND				1.35		1.50	mA
I_{OFF}	Output Leakage Current	0	$V_{OUT} = 5.5V$				0.5		5.0	μA

AC Electrical Characteristics

Symbol	Parameter	V_{CC} (V)	Conditions	$T_A = 25°C$ Min.	Typ.	Max.	$T_A = -40°C$ to $+85°C$ Min.	Max.	Units
t_{PLH}, t_{PHL}	Propagation Delay, A_n to $\overline{O}_n$	5.0 ± 0.5	$C_L = 15pF$		7.6	10.4	1.0	12.0	ns
			$C_L = 50pF$		8.1	11.4	1.0	13.0	
t_{PLH}, t_{PHL}	Propagation Delay, E_3 to $\overline{O}_n$	5.0 ± 0.5	$C_L = 15pF$		6.6	9.1	1.0	10.5	ns
			$C_L = 50pF$		7.1	10.1	1.0	11.5	
t_{PLH}, t_{PHL}	Propagation Delay, $\overline{E}_1$ or $\overline{E}_2$ to $\overline{O}_n$	5.0 ± 0.5	$C_L = 15pF$		7.0	9.6	1.0	11.0	ns
			$C_L = 50pF$		7.5	10.6	1.0	12.0	
C_{IN}	Input Capacitance		V_{CC} = Open		4	10		10	pF
C_{PD}	Power Dissipation Capacitance		(5)		49				pF

Note:

5. C_{PD} is defined as the value of the internal equivalent capacitance which is calculated from the operating current consumption without load. Average operating current can be obtained by the equation:
I_{CC} (Opr.) = $C_{PD} \cdot V_{CC} \cdot f_{IN} + I_{CC}$

Physical Dimensions

Dimensions are in millimeters unless otherwise noted.

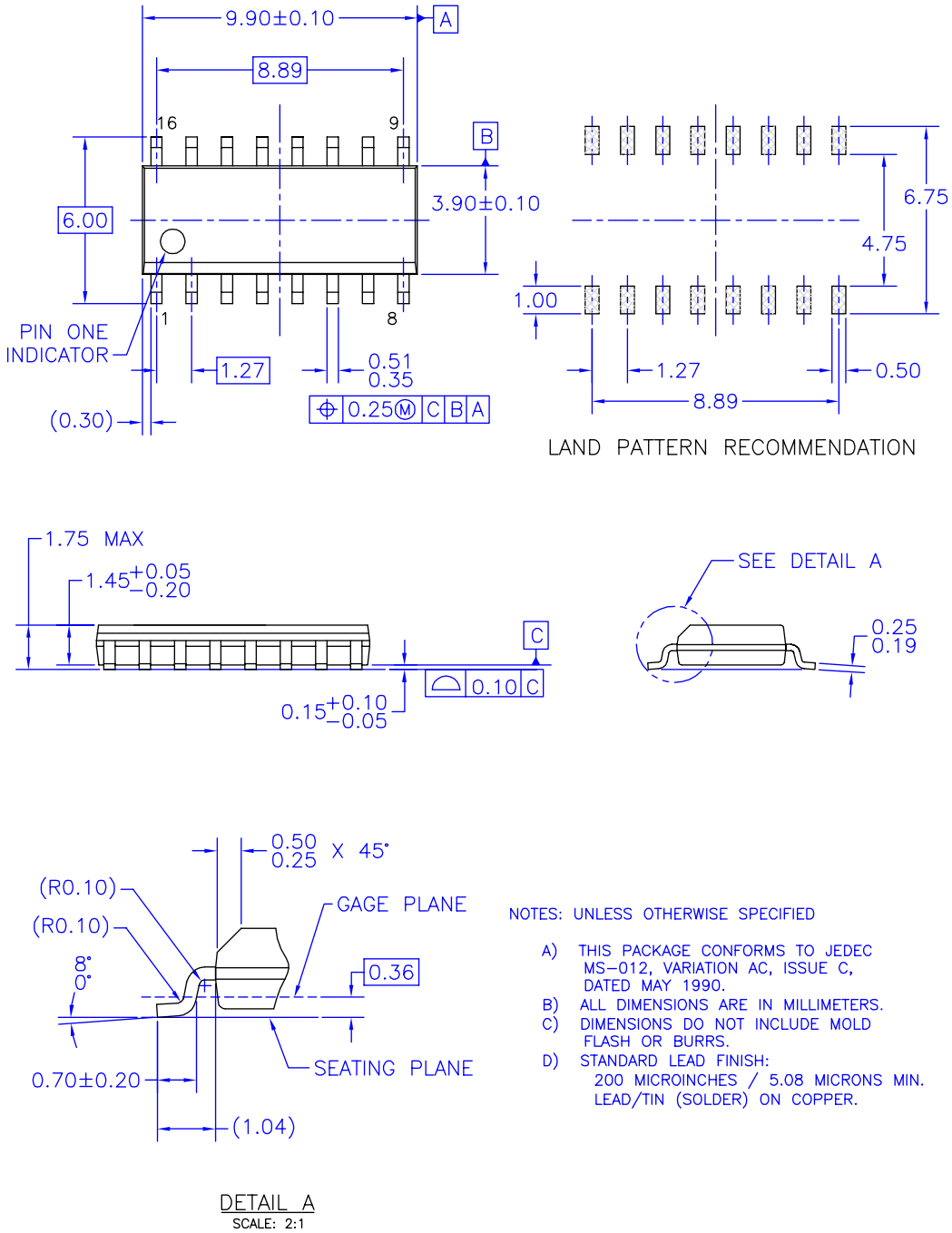

Figure 1. 16-Lead Small Outline Integrated Circuit (SOIC), JEDEC MS-012, 0.150" Narrow Package Number M16A

Physical Dimensions (Continued)

Dimensions are in millimeters unless otherwise noted.

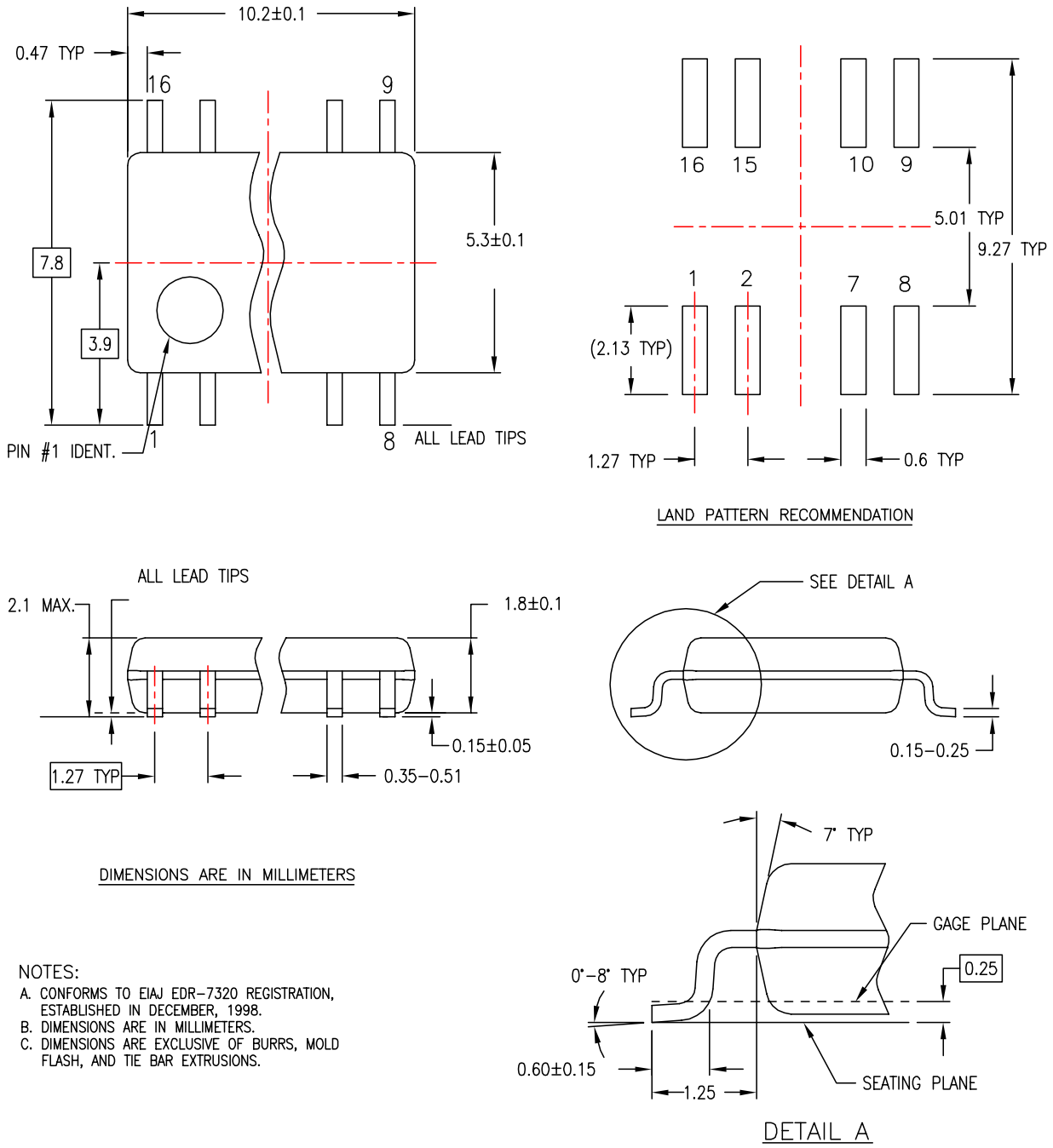

NOTES:

A. CONFORMS TO EIAJ EDR–7320 REGISTRATION, ESTABLISHED IN DECEMBER, 1998.
B. DIMENSIONS ARE IN MILLIMETERS.
C. DIMENSIONS ARE EXCLUSIVE OF BURRS, MOLD FLASH, AND TIE BAR EXTRUSIONS.

Figure 2. 16-Lead Small Outline Package (SOP), EIAJ TYPE II, 5.3mm Wide
Package Number M16D

Physical Dimensions (Continued)

Dimensions are in millimeters unless otherwise noted.

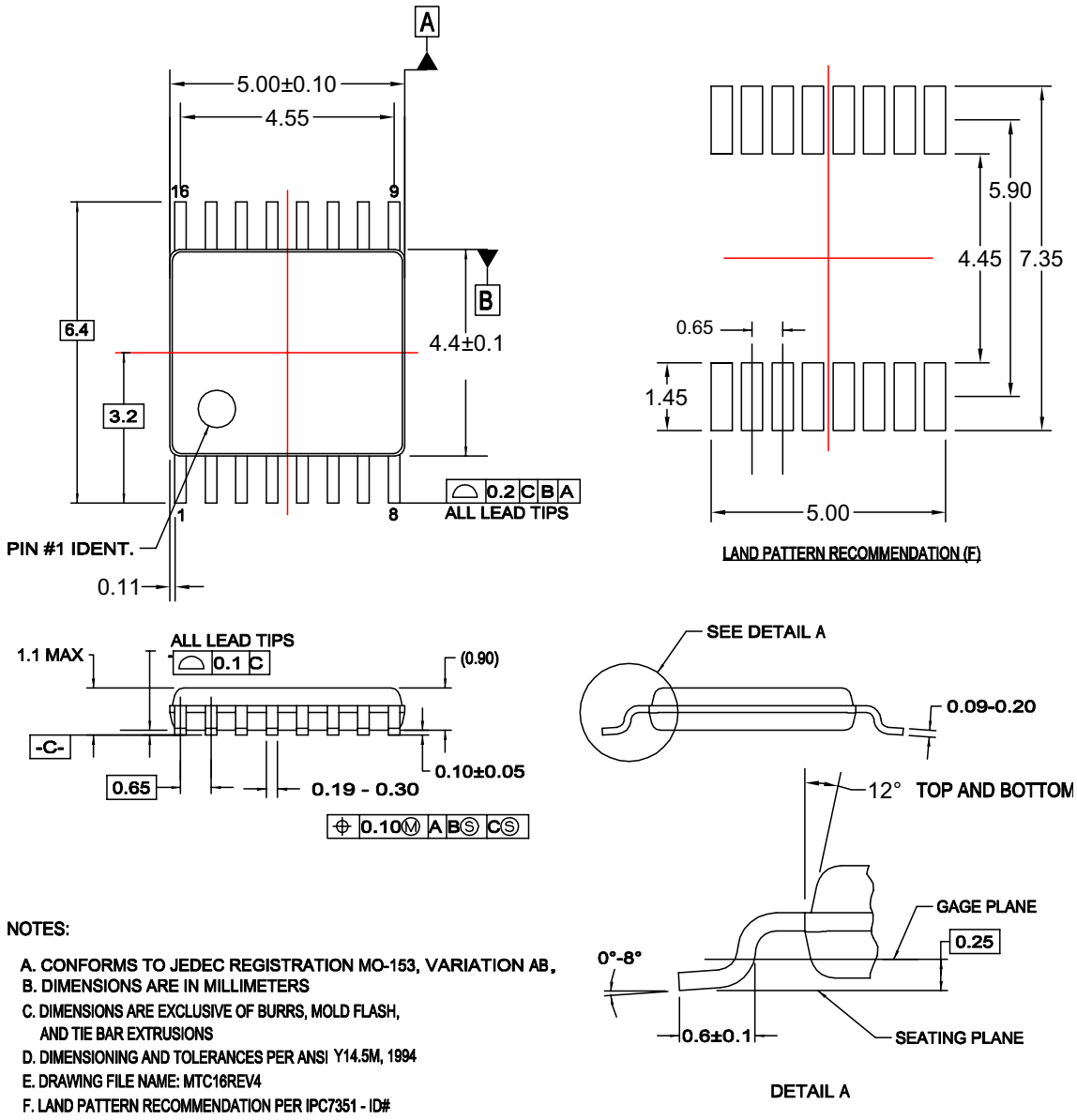

NOTES:

A. CONFORMS TO JEDEC REGISTRATION MO-153, VARIATION AB.
B. DIMENSIONS ARE IN MILLIMETERS
C. DIMENSIONS ARE EXCLUSIVE OF BURRS, MOLD FLASH, AND TIE BAR EXTRUSIONS
D. DIMENSIONING AND TOLERANCES PER ANSI Y14.5M, 1994
E. DRAWING FILE NAME: MTC16REV4
F. LAND PATTERN RECOMMENDATION PER IPC7351 - ID# TSOP65P640X110-16N

MTC16rev4

Figure 3. 16-Lead Thin Shrink Small Outline Package (TSSOP), JEDEC MO-153, 4.4mm Wide Package Number MTC16

FAIRCHILD SEMICONDUCTOR®

TRADEMARKS

The following are registered and unregistered trademarks Fairchild Semiconductor owns or is authorized to use and is not intended to be an exhaustive list of all such trademarks.

ACEx®
Across the board. Around the world.™
ActiveArray™
Bottomless™
Build it Now™
CoolFET™
CorePLUS™
CROSSVOLT™
CTL™
Current Transfer Logic™
DOME™
E^2CMOS™
EcoSPARK®
EnSigna™
FACT Quiet Series™
FACT®
FAST®
FASTr™
FPS™
FRFET®
GlobalOptoisolator™
GTO™
HiSeC™
i-Lo™
ImpliedDisconnect™
IntelliMAX™
ISOPLANAR™
MICROCOUPLER™
MicroPak™
MICROWIRE™
Motion-SPM™
MSX™
MSXPro™
OCX™
OCXPro™
OPTOLOGIC®
OPTOPLANAR®
PACMAN™
PDP-SPM™
POP™
Power220®
Power247®
PowerEdge™
PowerSaver™
Power-SPM™
PowerTrench®
Programmable Active Droop™
QFET®
QS™
QT Optoelectronics™
Quiet Series™
RapidConfigure™
RapidConnect™
ScalarPump™
SMART START™
SPM®
STEALTH™
SuperFET™
SuperSOT™-3
SuperSOT™-6
SuperSOT™-8
SyncFET™
TCM™
The Power Franchise®
™
TinyBoost™
TinyBuck™
TinyLogic®
TINYOPTO™
TinyPower™
TinyWire™
TruTranslation™
µSerDes™
UHC®
UniFET™
VCX™
Wire™

DISCLAIMER

FAIRCHILD SEMICONDUCTOR RESERVES THE RIGHT TO MAKE CHANGES WITHOUT FURTHER NOTICE TO ANY PRODUCTS HEREIN TO IMPROVE RELIABILITY, FUNCTION, OR DESIGN. FAIRCHILD DOES NOT ASSUME ANY LIABILITY ARISING OUT OF THE APPLICATION OR USE OF ANY PRODUCT OR CIRCUIT DESCRIBED HEREIN; NEITHER DOES IT CONVEY ANY LICENSE UNDER ITS PATENT RIGHTS, NOR THE RIGHTS OF OTHERS. THESE SPECIFICATIONS DO NOT EXPAND THE TERMS OF FAIRCHILD'S WORLDWIDE TERMS AND CONDITIONS, SPECIFICALLY THE WARRANTY THEREIN, WHICH COVERS THESE PRODUCTS.

LIFE SUPPORT POLICY

FAIRCHILD'S PRODUCTS ARE NOT AUTHORIZED FOR USE AS CRITICAL COMPONENTS IN LIFE SUPPORT DEVICES OR SYSTEMS WITHOUT THE EXPRESS WRITTEN APPROVAL OF FAIRCHILD SEMICONDUCTOR CORPORATION.

As used herein:

1. Life support devices or systems are devices or systems which, (a) are intended for surgical implant into the body or (b) support or sustain life, and (c) whose failure to perform when properly used in accordance with instructions for use provided in the labeling, can be reasonably expected to result in a significant injury of the user.
2. A critical component in any component of a life support, device, or system whose failure to perform can be reasonably expected to cause the failure of the life support device or system, or to affect its safety or effectiveness.

PRODUCT STATUS DEFINITIONS

Definition of Terms

Datasheet Identification	Product Status	Definition
Advance Information	Formative or In Design	This datasheet contains the design specifications for product development. Specifications may change in any manner without notice.
Preliminary	First Production	This datasheet contains preliminary data; supplementary data will be published at a later date. Fairchild Semiconductor reserves the right to make changes at any time without notice to improve design.
No Identification Needed	Full Production	This datasheet contains final specifications. Fairchild Semiconductor reserves the right to make changes at any time without notice to improve design.
Obsolete	Not In Production	This datasheet contains specifications on a product that has been discontinued by Fairchild Semiconductor. The datasheet is printed for reference information only.

Rev. I27

О компании

ООО "ТрейдЭлектроникс" - это оперативные поставки широкого спектра электронных компонентов отечественного и импортного производства напрямую от производителей и с крупнейших мировых складов. Реализуемая нашей компанией продукция насчитывает более полумиллиона наименований.

Благодаря этому наша компания предлагает к поставке практически не ограниченный ассортимент компонентов как оптовыми, мелкооптовыми партиями, так и в розницу.

Наличие собственной эффективной системы логистики обеспечивает надежную поставку продукции по конкурентным ценам в точно указанные сроки.

Срок поставки со стоков в **Европе и Америке – от 3 до 14 дней.**

Срок поставки из **Азии – от 10 дней.**

Благодаря развитой сети поставщиков, помогаем в поиске и приобретении экзотичных или снятых с производства компонентов.

Предоставляем спец цены на элементы для создания инженерных сэмплов.

Упорный труд, качественный результат дают нам право быть уверенными в себе и надежными для наших клиентов.

Наша компания это:

- Гарантия качества поставляемой продукции
- Широкий ассортимент
- Минимальные сроки поставок
- Техническая поддержка
- Подбор комплектации
- Индивидуальный подход
- Гибкое ценообразование

Наша организация особенно сильна в поставках модулей, микросхем, пассивных компонентов, ксайленсах (XC), EPF, EPM и силовой электроники.

Большой выбор предлагаемой продукции, различные виды оплаты и доставки, позволят Вам сэкономить время и получить максимум выгоды от сотрудничества с нами!

Trade Electronics.ru

гарантия бесперебойности производства и качества выпускаемой продукции

Перечень производителей, продукцию которых мы поставляем на российский рынок

AMD
ANALOG DEVICES
BOURNS
Coilcraft
élantec Semiconductor, Inc.
HARRIS
Infineon
JRC
MICREL
MOTOROLA
nichicon
PHILIPS
ROHM
SGS-THOMSON
Sipex
TAIYO YUDEN
TOKO
ZILOG
Winbond
Allegro
ATMEL
BURR - BROWN
EXAR
HITACHI
intel
Lattice
muRata
OKI
QUALCOMM
SAMSUNG
SHARP
SONY
TDK
TOSHIBA
KYOCERA
ALTERA
AVX
CITILYST
CYPRESS
FAIRCHILD SEMICONDUCTOR
HOLTEK
International IOR Rectifier
LINEAR TECHNOLOGY
MITSUBISHI
National Semiconductor
ON Semiconductor
REALTEK
SANYO
SHINDENGEN
SGS
TECCOR
TUNDRA
XILINX
Amphenol
Bay Linear
CIRRUS LOGIC
DALLAS
FUJITSU
IDT
intersil
MAXIM
molex
NEC
Panasonic
RENESAS
SII
SIEMENS
ST
Texas Instruments
VISHAY
ZETEX SEMICONDUCTORS

Trade Electronics.ru

гарантия бесперебойности производства и качества выпускаемой продукции

С удовольствием будем прорабатывать для Вас поставки всех необходимых компонентов по текущим запросам для скорейшего выявления групп элементов, по которым сотрудничество именно с нашей компанией будет для Вас максимально выгодным!

С уважением,

Менеджер отдела продаж ООО

«Трейд Электроникс»

Шишлаков Евгений

8 (495)668-30-28 доб 169

manager28@tradeelectronics.ru

http://www.tradeelectronics.ru/