World modem II

Features

- Self-contained 300 – 56K baud modem family
- V.42, V.42bis, MNP4 Error Correction
- Compliant with global regulatory standards
- Standard & Extended AT command set
- Serial host interface
- Internal UART with HW/SW flow control
- Supports standard alarm protocols
- Caller ID, Call Progress & Fast Connect
- Phone Line Snoop and Tamper Detection
- Compatible with all Copeland Communications 2400, 14.4K, 33K and 56K high speed socket modems
- Socket Modem™ compatible
- Low power consumption – 3.3 V operation
- Low Power Standby Mode
- Small footprint – 1.045" X 2.54"

Applications

- Global Embedded applications
- Point-of-sale terminals
- Set-top boxes
- Vending & gaming machines
- Security Systems
- Remote monitoring & control
- Remote telemetry and SCADA
- OEM applications
- Bridge for other CCI products

Description

The CC56K World modem is a compact integrated 56Kbaud ITU-V.90 modem with Socket Modem™ compatibility. The modem features a transformer-less DAA meeting global telephone system requirements, no electro-mechanical components and flexible DSP data pump. The modem is user-configurable to meet virtually all global telecom requirements. The modem supports serial host communications via flexible internal UART. The modem conforms to the industry standard Socket Modem™ mechanical and interface specifications. Because of its built-in features and flexibility, many applications and OEM products can be created using the World Modem. The World Modem is an ideal modem for world-wide embedded applications due to its flexibility, global compliance, small size, low power consumption and upgradeability. Copeland Communications World modems are software and plug compatible and available in 2400, 14.4K, 33K or 56K baud versions.

Block Diagram

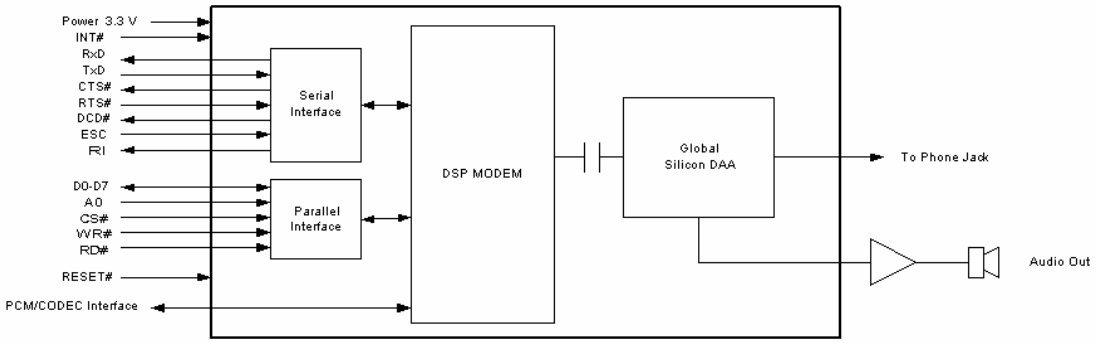

© 2004, Copeland Communications, Inc.

Host Interface

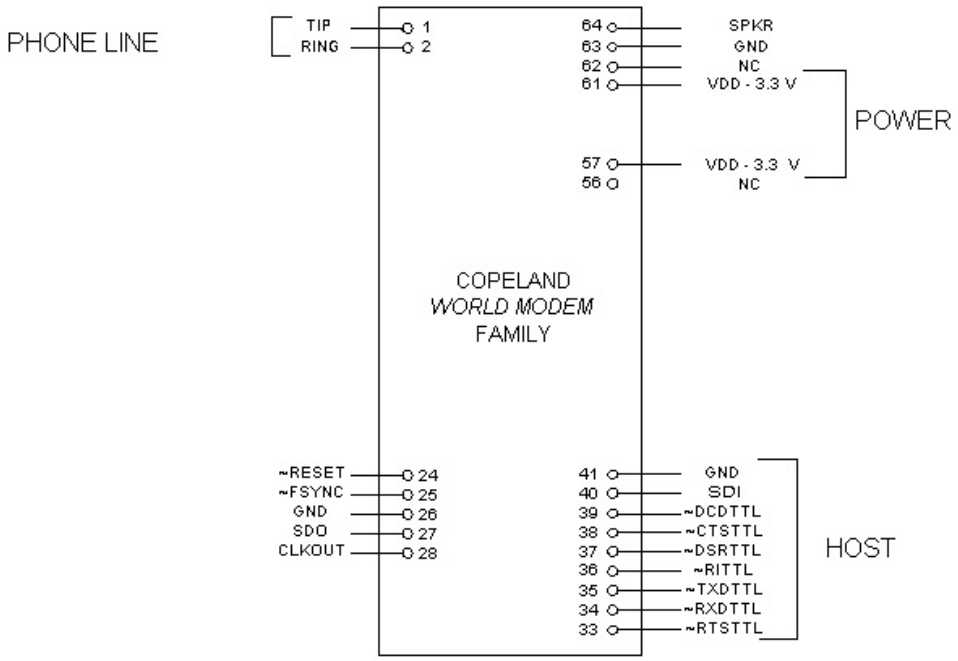

Note: Signals on pins 24,27,33-40 are TTL.

Serial Host Interface

The host interface control and data signals are 3.3volts and are 5 volt tolerant. The World modem II modems can be directly connected into 3.3 or 5 volt systems. Connect either pin 57 or pin 61 to 3.3V power supply.

© 2004, Copeland Communications, Inc.

Mechanical Outline

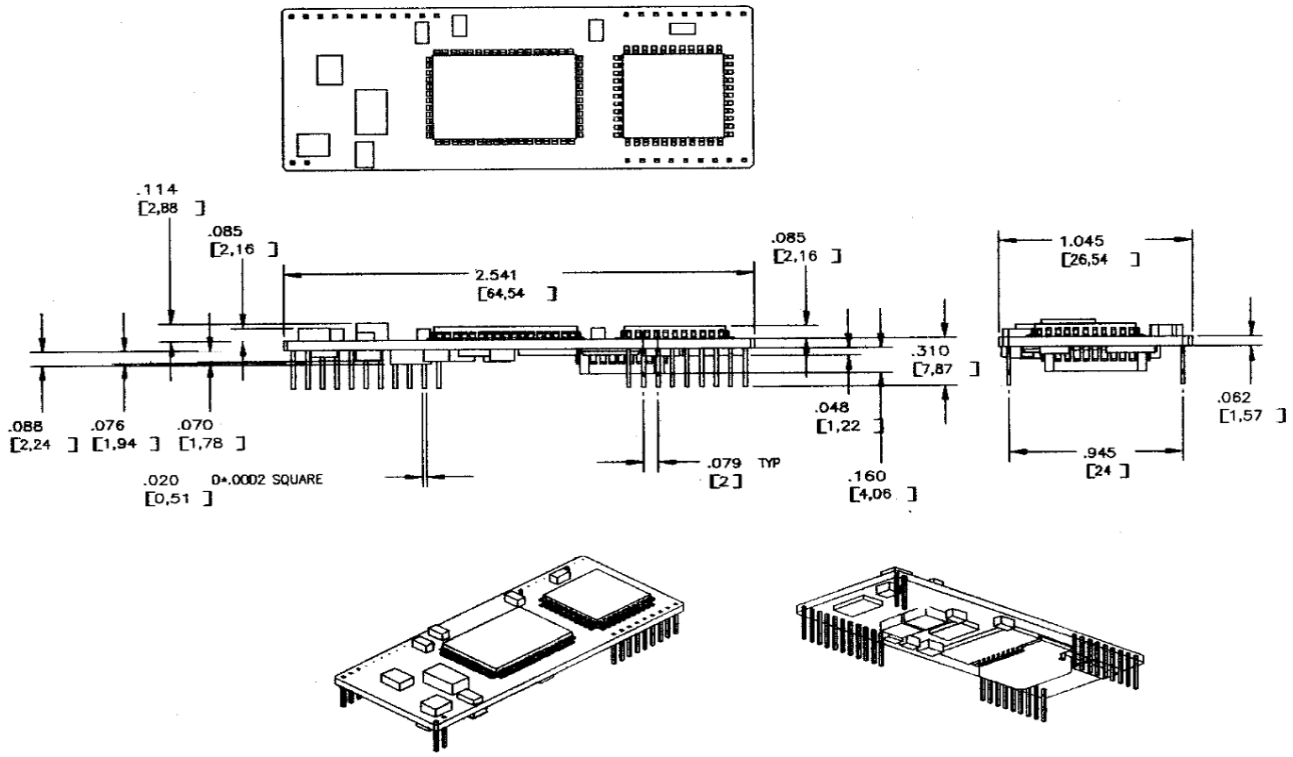

Mechanical

The modem module is on an 0.062 thick FR-4 PC board. The module has two rows of 2mm pins located 24mm on center. The module is designed to plug into 2 mm sockets with the same 24 mm spacing.

Due to the low mass of the board, no retention is required aside from the sockets. A large tie-wrap may be used to insure retention in high shock or vibration environments, if desired.

© 2004, Copeland Communications, Inc.

Detailed Specifications

Item	Specification
Data Rate	
56K bps-28K 2400 bps – 33.6K bps 2400 bps – 14.4K bps 1200bps 300 bps	V.90 V.34 V.32bis V.22, V.23 or Bell 212A V.21 or Bell 103
Data Format	
Bit format	Selectable 8,9,10 or 11 bits per character
Compatibility	V.23, V.22bis, V.21, Bell 212A & Bell 103
Control	AT command set
Host Interface	
Serial	TTL - 8,9,10 & 11 bit asynchronous data @ 2400-19.2Kbps rate
Flow Control	CTS, RTS, DCD, RI
Features	
Caller ID	Bellcore (US) & ETSI (European)
PCM/CODEC	
Parallel Phone Detection	On-hook and off-hook detection
International Operation	Via programmable control registers
Dialing	DTMF & pulse
Power Requirements Voltage Current	 3.3 V Nominal 3.0V Minimum 3.6V Maximum 35 mA Operating Maximum 130 µA Standby Maximum
Environmental	
Temp Range	Commercial 0C-70C
Compliance [1]	FCC part 15 FCC part 68 EN50082-1 CTR-21

Asynchronous Serial Interface

The Asynchronous Serial Interface is a complete UART consisting of Receive and Transmit signals as well as RTS, CTS, DSR, DTR, DCD and RI control signals. RTS/CTS, DSR/DTR and XON/XOFF flow control are supported.

The UART is programmable to support a number of baud rates and data formats. Supported data rates and formats are:

Data Bits: 8
Stop Bits: 1
Baud Rates: 300, 600, 1200, 1800, 2400, 4800, 7200, 9600, 14.400, 19200, 28800, 38400, 56000, 57600, 115200, 128000, 230400, 460800, 921600

© 2004, Copeland Communications, Inc.

Protocols

Item	Specification
Data Rate	
56 kbps [1]	ITU-T V.90[1]
54.666 kbps [1]	ITU-T V.90[1]
53.333 kbps [1]	ITU-T V.90[1]
52 kbps [1]	ITU-T V.90[1]
50.666 kbps [1]	ITU-T V.90[1]
49.333 kbps [1]	ITU-T V.90[1]
48 kbps [1]	ITU-T V.90[1]
46.666 kbps [1]	ITU-T V.90[1]
45.333 kbps [1]	ITU-T V.90[1]
44 kbps [1]	ITU-T V.90[1]
42.666 kbps [1]	ITU-T V.90[1]
41.333 kbps [1]	ITU-T V.90[1]
40.0 kbps [1]	ITU-T V.90[1]
38.666 kbps [1]	ITU-T V.90[1]
37.333 kbps [1]	ITU-T V.90[1]
36.0 kbps [1]	ITU-T V.90[1]
34.666 kbps [1]	ITU-T V.90[1]
33.333 kbps [1]	ITU-T V.90[1]
32.0 kbps [1]	ITU-T V.90[1]
30.666 kbps [1]	ITU-T V.90[1]
29.333 kbps [1]	ITU-T V.90[1]
28.0 kbps [1]	ITU-T V.90[1]
33.6 kbps [2]	ITU-T V.34[2]
31.2 kbps [2]	ITU-T V.34[2]
38.8 kbps [2]	ITU-T V.34[2]
26.4 kbps [2]	ITU-T V.34[2]
24.0 kbps [2]	ITU-T V.34[2]
21.6 kbps [2]	ITU-T V.34[2]
19.2 kbps [2]	ITU-T V.34[2]
16.8 kbps [2]	ITU-T V.34[2]
14.4 kbps	ITU-T V.34 or V.32bis
12.0 kbps	ITU-T V.34 or V.32bis
9600 bps	ITU-T V.34, V.32bis, or V.29
7200 bps	ITU-T V.34 or V.32bis
4800 bps	ITU-T V.34 or V.32bis
2400 bps	ITU-T V.34 or V.22bis
1200 bps	ITU-T V.22bis, V.23, or Bell 212A
300 bps	ITU-T V.21
300 bps	Bell 103

Notes:

1. Supported on CC-56K2 only
2. Supported on CC-56K2 and CC-33K2 only

© 2004, Copeland Communications, Inc.

Protocol Characteristics (Continued)

Item	Specification
Data Format	
Bit synchronous	Selectable 8, 9, 10, or 11 bits per character
Compatibility	ITU-T V.90, V.34, V.32bis, V.32, V.23, V.22bis, V.22, V.21, Bell 212A, and Bell 103
Operating Mode	
Switched network	Two-wire full duplex
Data Modulation	
28 to 56 kbps[1]	V.90 as specified by ITU-T
2.4 to 33.6 kpbs[2]	V.34 as specified by ITU-T
14.4 kbps	128-level TCM/2400 Baud ± 0.01%
12.0 kbps	64-level TCM/2400 Baud ± 0.01%
9600 bps	32-level TCM/2400 Baud ± 0.01%
9600 bps	16-level QAM/2400 Baud ± 0.01%
9600 bps	V.29 QAM as specified by ITU-T
7200 bps	16-level TCM/2400 Baud ± 0.01%
4800 bps	4-level QAM/2400 Baud ± 0.01%
2400 bps	16-level QAM/600 Baud ± 0.01%
1200 bps	4-level PSK/600 Baud ± 0.01%
0 to 300 bps	FSK 0-300 Baud ± 0.01%
Answer Tone	
ITU-T V.32bis, V.32, V.22bis, V.22, and V.21 modes	2100 Hz ±3 Hz
Bell 212A and 103 modes	2225 Hz ±3 Hz
Transmit Carrier	
V.90[1]	As specified by ITU-T
V.34[2]	As specified by ITU-T
ITU-T V.32bis	1800 Hz ±0.01%
ITU-T V.22, V.22bis/Bell 212A	
Originate mode	1200 Hz ±0.5 Hz
Answer mode	2400 Hz ±1 Hz
ITU-T V.21	
Originate mode	Mark (980 Hz ±12 Hz) Space (1180 Hz ± 12 Hz)
Answer mode	Mark (1650 Hz ± 12 Hz) Space (1850 Hz ±12 Hz)
Bell 103	
Originate mode	Mark (1270 Hz ± 12 Hz) Space (1070 Hz ± 12 Hz)
Answer mode	Mark (2225 Hz ± 12 Hz) Space (2025 Hz ± 12 Hz)
Output Level	
Permissive-Switched network	-9 dBm maximum

Notes:

1. Supported on CC-56K2 only.
2. Supported on CC-56K2 and CC-33K2 only.

© 2004, Copeland Communications, Inc.

Protocol Characteristics (Continued)

Item	Specifications
Receive Carrier	
ITU-T V.90[1]	As specified by ITU-T
ITU-T V.34[2]	As specified by ITU-T
ITU-T V.32bis	1800 Hz ±7 Hz
ITU-T V.32	1800 Hz ±7 Hz
ITU-T V.22, V.22bis/Bell 212A	
Originate mode	2400 Hz ±7 Hz
Answer mode	2400 Hz ±7 Hz
ITU-T V.21	
Originate mode	Mark (980 Hz ± 12 Hz) Space (1180 Hz ± 12 Hz)
Answer mode	Mark (1650 Hz ± 12 Hz) Space (1850 Hz ± 12 Hz)
Bell 103	
Originate mode	Mark (2225 Hz ± 12 Hz) Space (2025 Hz ± 12 Hz)
Answer mode	Mark (1270 Hz ± 12 Hz) Space (1070 Hz ± 12 Hz)
Carrier Detect (level for ITU-T V.22bis, V.22, V.21, 212, 103) in Switched Network	Acquisition (-43 dBm) Release (-48 dBm)
Hysteresis	2 dBm minimum
Note: ITU-T V.90[1], V.34[2], V.32/V.32bis are echo canceling protocols that use signal quality as criteria for maintaining connection. They also provide for self-training detection to forced disconnect	
DTE Interface	EIA/TIA-232-E (ITU-T V.24/V.28/ISO 2110)
Line Equalization	Automatic Adaptive
Connection Options	Loss of Carrier in ITU-T V.22bis and lower
Phone Types	500 (rotary dial), 2500 (DTMF dial)
Dialing	Pulse and Tone
DTMF Output Level	Per Part 68
Pulse Dial Ratio	Make/Break 39/61%
Ring Cadence	On 2 seconds; Off 4 seconds
Call Progress Monitor	BUSY, CONNECT (rate) NO ANSWER, NO CARRIER, NO DIALTONE, OK, RING, RINGING
Notes: **1.** Supported on CC-56K2 only. **2.** Supported on CC-56K2 and CC-33K2 only.	

© 2004, Copeland Communications, Inc.

Functional Description

The World modem II is a complete embedded modem with integrated direct access arrangement (DAA) that provides a programmable line interface to meet global telephone line requirements. This solution includes a DSP data pump, modem controller, on-chip RAM and ROM, codec, DAA and analog output. The World Modem II accepts standard modem AT commands and provides connect rates up to 56/33.6/14.4 kbps full-duplex over the Public Switched Telephone Network (PSTN). The World modem II features a complete set of modem protocols including all ITU-T standard formats up to 56 kbps. The World modem II provides numerous additional features for embedded modem applications. The modem includes full type I and type II caller ID detection and decoding for global standards. Call progress is supported through echoing result codes and is also programmable to meet global settings. Because the World modem II integrates the DAA, analog features, such as parallel phone detect, overcurrent detection, and global PTT compliance with a single design, are included. This device is ideal for embedded modem applications due to its small board space, low power consumption, and global compliance. The silicon DAA can be programmed to meet worldwide PTT specifications for ac termination, dc termination, ringer impedance, and ringer threshold. In addition, the World modem II has been designed to meet the most stringent worldwide requirements for out-of-band energy, billing-tone immunity, surge immunity, and safety requirements. The World modem II allows for rapid integration into existing modem applications by providing a serial interface that can directly communicate to either a microcontroller via a UART interface or a PC via an RS-232. This interface allows for PC evaluation of the modem immediately upon powerup via the AT commands using standard terminal software.

Host Interface

The host interface is serial TTL. The default host speed of 19.2 Kb and 8N1 format (8 data bits, no parity bit and 1 stop bit). The defaults can be changes after initialization by using standard AT commands. A true RS-232 interface is available on the World modem Evaluation Board.

© 2004, Copeland Communications, Inc.

Serial Interface

The pin out of the serial modem is shown in the figure below.

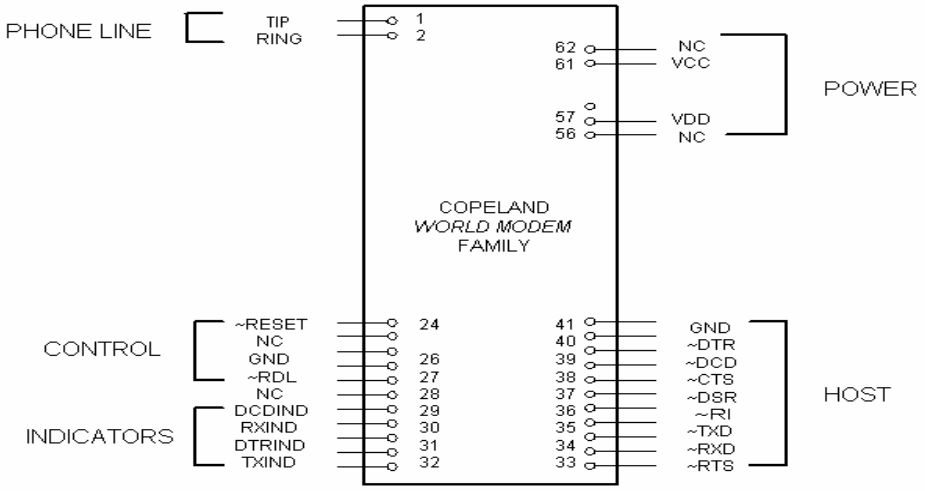

Note: Signals on pins 24,27,33-40 are TTL.

Serial Host Interface

© 2004, Copeland Communications, Inc.

Serial data

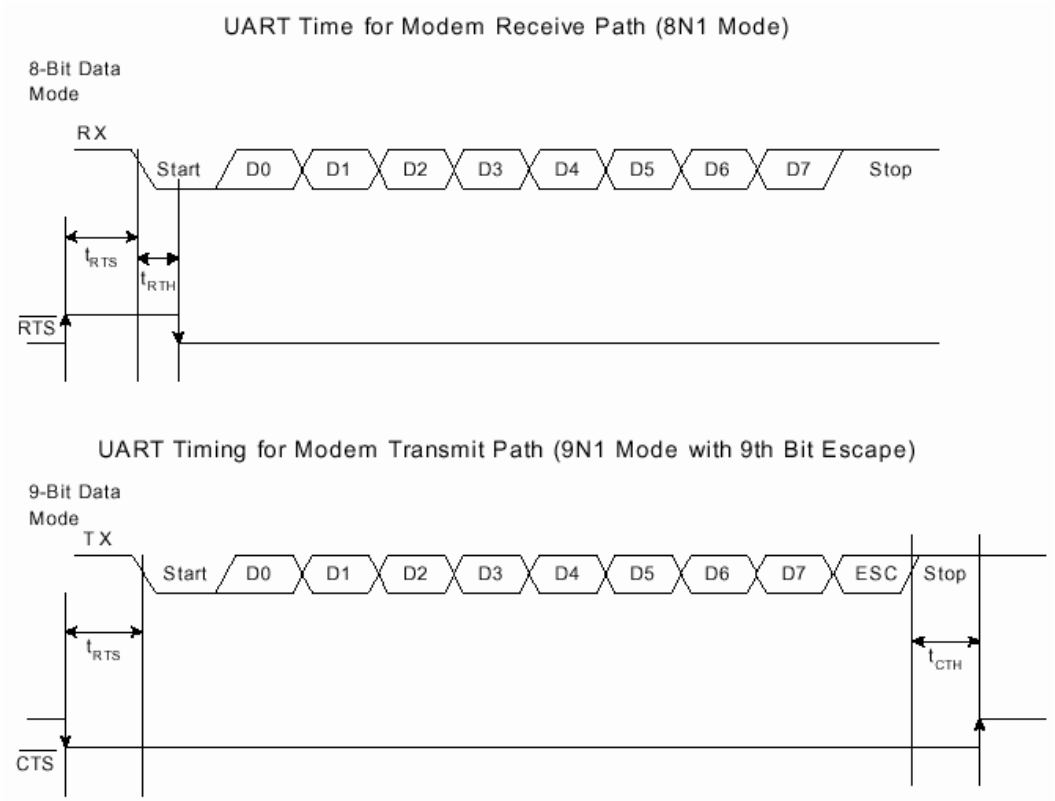

Figure 2. Asynchronous UART Serial Interface Timing Diagram

Autobaud

The modem includes an automatic baud rate detection feature that allows the host to start transmitting data at any standard DTE rate from 300 bps to 307.2 kbps. This feature is enabled by default.

Flow Control

The modem provides both hardware and software flow control.

Hardware Flow Control

RTS
CTS
DSR
DTR

© 2004, Copeland Communications, Inc.

Status

In addition to flow control, the modem provides two hardware status signals

DCD
RI

© 2004, Copeland Communications, Inc.

Reset – A hardware reset is provided to reset the modem controller on power-up or to force the modem back to its default settings. This active low signal has an on-board pull up. Leave this pin unconnected if hardware reset is not needed.

Audio Output
The World Modem II modules support an analog (audio) output. This analog signal can be used for call progress monitoring.

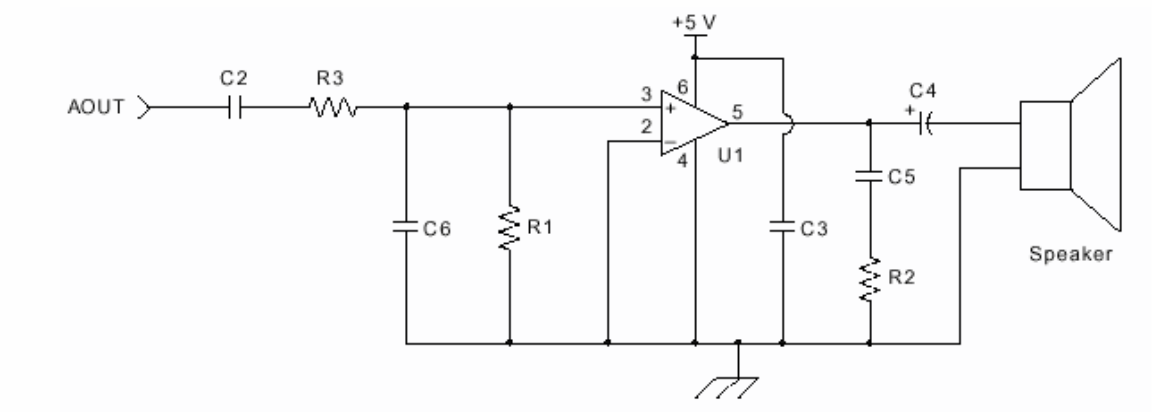

Optional Call Progress Monitor

Suggested Component Values

Symbol	Value
C2, C3, C5	0.1 µF, 16 V, ±20%
C4	100 µF, 16 V, Elec. ±20%
C6	820 pF, 16 V, ±20%
R1	10 k?, 1/10 W, ±5%
R2	10 ?, 1/10 W, ±5%
R3	47 k?, 1/1 W, ±5%
U1	LM386

© 2004, Copeland Communications, Inc.

Power

The module is powered by an external 3.3 VDC source. Pins 57 and 61 are tied together internally and either or both connected to an external 3.3V supply. There is no on-board regulation of the power supply. The system needs to supply approximately 50 mA of current.

The power pin(s) should be decoupled with a good quality 0.01 µF ceramic capacitor and a 1µF electrolytic or tantalum capacitor.

See CCI Common Socket Interface Specification for more details.

© 2004, Copeland Communications, Inc.

Basic AT Command Set (Command Defaults in Bold)

Command	Action	
$	Display AT command mode settings	
A	Answer incoming call	
A/	Re-execute last command. This is the only command not preceded by "AT" or followed by a <CR>	
Dn	Dial, followed by 1 or more dial command modifiers, manually dials a phone number	
	Modifier	**Function**
	! or &	Flash hook switch for FHT (U4F) ms (default: 500 ms)
	, or <	Pause before continuing for S8 seconds (default: 2 seconds)
	;	Return to AT command mode
	@	Wait for silence.
	G	Polarity reversal detect. By placing the "G" character in the dial string (i.e. ATDTG1), the modem will monitor the telephone line for polarity reversals. If a busy tone is detected, the modem will report "POLARITY REVERSAL" if a polarity reversal was detected or "NO POLARITY REVERSAL" if a polarity reversal was not detected. In each case, the result code is followed by "OK". If the S7 timeout occurs before a busy tone is detected, the modem will report "NO CARRIER". Polarity reversal monitoring begins after the last digit is dialed and ends when the busy tone is detected or S7 timeout occurs.
	L	Redial last number.
	P	Pulse (rotary) dialing)
	T	Tone (DTMF) dialing
	W	Wait for dial tone before continuing for S14 seconds (default: 12 seconds). Blind dialing modes X0, X1, and X3 do not affect the W command. If the DOP bit (U7A, bit 7) is set, the "ATDTW" command will cause the modem to pause dialing and either report an "OK" if a dial tone is detected or "NO DIALTONE" if a dial tone is not detected.
En	Local DTE echo	
E0	Disable	
E1	**Enable**	
Hn	Hook switch	
H0	Go on-hook (hang up modem).	
H1	Go off-hook.	

© 2004, Copeland Communications, Inc.

Basic AT Command Set (Command Defaults in Bold) (Continued)

Command	Action
In	Identification and checksum.
I0	Display World Modem chipset version. B, C, D, E, F, G, H….etc.
I1	Display World Modem firmware revision code (numeric).
I3	Display line-side revision code.
I6	Display chipset model number.
I7	Diagnostic result 1.
I8	Diagnostic result 2.
Mn	Speaker output (via AOUT pin 63)
M0	**Speaker is always off.**
M1	Speaker is on during dialing and handshaking. Off in data mode.
M2	Speaker is always on.
M3	Speaker is off while dialing. On during handshake and retrianing.
On	Return to data mode from command mode operation.
O0	Return to data mode.
O1	Return to data mode and perform a full retrain (except for 300 bps).
O2	Return to data mode and perform rate renegotiation.
Qn	Response mode.
Q0	**Enable result codes.**
Q1	Disable result codes.
R	Initiate V.23 reversal.
Sn	S-register operation.
S$	List contents of all S-registers.
Sn?	Displays contents of S-register n.
Sn=x	Set S-register n to value x. (x and n are decimal numbers).
Vn	Result code type.
V0	Numeric result codes.
V1	**Verbal Result codes.**
Xn	Call Progress Monitor (CPM). Controls which CPM signals are monitored and reported to the host from the modem.
X0	Basic results. Disable CPM, blind dial (doesn't wait for dial tone). CONNECT message does not include speed.
X1	Extended results. Disable CPM, blind dial. Connect message includes speed.
X2	Extended results and detect dial tone only.
X3	Extended results and detect busy only.
X4	**Extended results and full CPM enabled. CONNECT message includes speed.**
X5	Extended results. Full CPM and ringback detection enabled.

© 2004, Copeland Communications, Inc.

Basic AT Command Set (Command Defaults in Bold) (Continued)

Command	Action
Yn	Long space disconnect. Modem hangs up after 1.5 seconds or more of continuous space while on-line.
Y0	**Disable.**
Y1	Enable.
Z	Hard Reset - Resets the modem. (Same as asserting RESET# on pin 24).
:E	Read from serial EEPROM.
:I	Interrupt read. This command causes the modem to report the lower 8 bits of the interrupt register IO Control 0 (U70). The CID, OCD, PPD, and RI bits are also cleared.
:M	Write to Serial EEPROM.
:P	Program RAM write. This command is used to upload firmware supplied by CCI to the modem. Contact CCI for more information.
:R	User-Access Register Read. This command allows the user to read from us er-access registers. The format is "AT:Raa", where: aa = user-access address in hexadecimal. "AT:R" command causes all the U-registers to be displayed.
:U	User-Access Register Write. Allows the user to write to the 16-bit user-access registers. The format is "AT:Uaa,xxxx,yyyy,zzzz" where aa = user-access address in hexadecimal. xxxx = data in hexadecimal to be written to location aa. yyyy = data in hexadecimal to be written to location (aa + 1). zzzz = data in hexadecimal to be written to location (aa + 2).

© 2004, Copeland Communications, Inc.

Basic AT Command Set (Command Defaults in Bold) (Continued)

Command	Action
+DR=X	Data Compression Reporting. **X Mode** **0 Disabled** 1 Enabled If enabled, the intermediate result code is transmitted at the point after error control negotiation. The format of the result code is: **Result Code Mode** +DR:NONE Data compression is not in use. +DR:V42B Rec V.42bis is in use in both directions. +DR:V42B RD Rec V.42bis is in use in receive direction only. +DR:V42B TD Rec V.42bis is in use in transmit direction only.
+DS Options +DS = A +DS=A,B +DS=A,B,C +DS=A,B,C,D	Controls V.42bis data compression function. A Direction 0 No compression 1 Transmit only 2 Receive only 3 Both Directions B Compression Negotiation **0 Do not disconnect if V.42 is not negotiated.** 1 Disconnect if V.42 is not negotiated. C Maximum dictionary size 512 D Maximum string size 6 to 250 (28 default)

© 2004, Copeland Communications, Inc.

Basic AT Command Set (Command Defaults in Bold) (Continued)

Command	Action
+ES Options +ES = A +ES = A,,C	Enable synchronous assess mode. A Specifies the mode of operation when initiating a modem connection. D Disable synchronous access mode. 6 Enable synchronous access mode when connection is completed and data state is entered C Specifies the mode of operation when answering a modem connection. D Disable synchronous access mode 8 Enable synchronous access mode when connection is completed and data state is entered.
+ESA Options +ESA = A +ESA = A,B +ESA = A,B,C +ESA = A,B,C,E +ESA = A,B,C,E,F +ESA = A,B,C,E,F,G	Synchronous access mode control options. A Specifies action taken if an underrun condition occurs during transparent sub-mode. 0 Modem transmits 8-bit SYN sequences on idle. B Specifies action taken if an underrun condition occurs after a flag during framed sub-mode. 0 Modem transmits 8-bit HDLC flags on idle. C Specifies action taken if an underrun or overrun condition occurs after a non-flag during framed sub-mode. 0 Modem transmits abort on underrun in middle of frame. 1 Modem transmits flag on underrun in middle of frame and notifies host of underrun or overrun. D Specifies V.34 half duplex operation. This parameter should not be used. E Specifies CRC polynomial used while in framed sub-mode 0 CRC generation checking disable. 1 16-bit CRC generation and checking is performed by the modem. F Specifies NRZI encoding and decoding. 0 NRZI encoding and decoding disabled. G Specifies SYN. 255

© 2004, Copeland Communications, Inc.

Basic AT Command Set (Command Defaults in Bold) (Continued)

Command	Action
+FCLASS = X	Class 1 Mode Enable for V.29 fast connect. X Mode **0 Off** 1 Enables support for Class 1 mode for use in the V.29 fast connect mode.
+FRM = X	Class 1 Receive Carrier for V.29 fast connect. X Mode 2 Transmit V.21 (980 Hz) tone for longer than 100 ms, then send answer tone (2100/2225 Hz) for 200 ms. 95 V.29 short synchronous. 96 V.29 full synchronous.
+FTM = X	Class 1 Transmit Carrier for V.29 fast connect. X Mode 4 Transmit V.21 (890 Hz) tone. 53 Same as &T4, but transmit V.29 7200 bps. Data pattern set by S40 register. AT+ FCLASS = 0 must be sent to restore the modem to normal operation after test. 54 Same as &T4, but transmit V.29 9600 bps. Data pattern set by S40 register. AT + FCLASS = 0 must be sent to restore the modem to normal operation after test. 95 V.29 short synchronous. 96 V.29 full synchronous.

© 2004, Copeland Communications, Inc.

Basic AT Command Set (Command Defaults in Bold) (Continued)

Command	Action
+GCI = X	Country Settings - Automatically configure all registers for a particular country. X Country 0 Japan 9 Australia A Austria F Belgium 16 Brazil 1B Bulgaria 20 Canada 26 China 27 Columbia 2E Czech Republic 31 Denmark 35 Ecuador 3C Finland 3D France 42 Germany 46 Greece 50 Hong Kong 51 Hungary 53 India 57 Ireland 58 Israel 59 Italy 61 South Korea 69 Luxembourg 6C Malaysia 73 Mexico 7B Netherlands 7E New Zealand

© 2004, Copeland Communications, Inc.

Basic AT Command Set (Command Defaults in Bold) (Continued)

Command	Action
+GCI = X (cont)	82 Norway 87 Paraguay 89 Philippines 8A Poland 8B Portugal 9C Singapore 9F South Africa A0 Spain A5 Sweden A6 Switzerland B4 United Kingdom **B5 United States** B8 Russia FE Taiwan **Note:** U-Registers are configured to recommended values. The +GCI command resets the U-registers and the S6 and S7 S-registers to default values before setting country specific values. Changes may be made to individual registers after setting the AT+GCI command.
+GCI?	List current country code setting. (response: +GCI:<settings>).
+GCI = ?	Lists all possible country code settings.

© 2004, Copeland Communications, Inc.

Basic AT Command Set (Command Defaults in Bold) (Continued)

Command	Action
+IFC Options +IFC = A +IFC = A,B	Specifies the flow control to be implemented. A Specifies the flow control method used by the host to control data from the modem. 0 None 1 Local XON/OFF flow control. Does not pass XON/XOFF character to the remot modem. 2 Hardware flow control (RTS). B Specifies the flow control method used by the modem to control data from the host. 0 None 1 Local XON/OFF flow control. Does not pass XON/XOFF character to the remot modem. 2 Hardware flow control (CTS).
+ITF Options +ITF = A +ITF = A,B +ITF = A,B,C	Transmit flow control threshold. A Threshold above which the modem will generate a flow off signal. < 0 to 511> bytes B Threshold below which the modem will generate a flow on signal < 0 to 511> bytes C Polling interval for <EM><BNUM> indicator 0 to 300 in 10 msec units.
+MR = X	Modulation reporting control. X Mode **0 Disabled** 1 Enabled If enabled, the intermediate result code is transmitted at the point during connect negotiation. The format of this result code is asw follows: +MCR: <carrier> e.g. +MCR: V32B +MRR: <rate> e.g. +MRR: 14400
+MS Options +MS = A +MS = A,B +MS = A,B,C +MS = A,B,C,D +MS = A,B,C,D,E +MS = A,B,C,D,E,F	Modulation Selection. A Preferred modem carrier V21 ITU-T V.21 V22 ITU-T V.22 V.22B ITU-T V.22bis **V32 ITU-T V.32 (default for CC-14.4K2)** V.32B ITU-T V.32bis **V34 ITU-T V.34 (default for CC-33K2)** **V90 ITU-T V.90 (default for CC-56K2)** B Automatic modulation negotiation 0 Disabled **1 Enabled** C,D Min rate/Min rx rate are optional numeric values that specify the lowest value at which the DCE ma establish a connection. If unspecified (set to zero), the are determined by the carrier and automode settings. E,F Max rate/Max rx rate are optional numeric values which specify the highest values which specify the highest value at which the DCE may establish a connection. If unspecified (set to 0), they are determined by the carrier and automode settings.

© 2004, Copeland Communications, Inc.

Basic AT Command Set (Command Defaults in Bold) (Continued)

Command	Action
+PCW = X	Controls the action to be taken upon detection of call waiting. X Mode 0 Toggle RI# and collect Type II Caller ID if enabled by +VCID. 1 Hang up. **2 Ignore Call Waiting.**
+VCDT = X	Caller ID Type. X Mode **0 After ring only.** 1 Always on. 2 UK 3 Japan
+VCID = X	Caller ID Enable. X Mode **0 Off** 1 On - formatted 2 On - raw data format
+VCDIR?	Type II Caller ID information - The modem will display "+VCDIR:" followed by raw caller ID information including checksum.

© 2004, Copeland Communications, Inc.

Extended AT& Command Set (Command Defaults in Bold)

Command	Action
&$	Display AT& current settings
&F	Restore factory default settings
&Gn	Line connection rate limit. This command sets the upper limit on line speed that the modem can connect. The &Hn may limit the line speed as well.
&G3 &G4	1200 bps max 2400 bps max
&G5 &G6	4.8 kbps max 7.2 kbps max
&G7	9.6 kbps max
&G8	12 kbps max
&G9	**14.4 kbps max (default for CC-14.4K)**
&G10	16.8 kbps max
&G11	19.2 kbps max
&G12	21.6 kbps max
&G13	24 kbps max
&G14	26.4 kbps max
&G15	28.8 kbps max
&G16	31.2 kbps max
&G17	**33.6 kbps max (default for CC-33K and CC-56K2)**
&Hn	Switched network handshake mode. &Hn must be on separate command line from ATD, ATA, ATO commands.
&H0	**V.90 with automatic fallback (56 kbps to 300 bps) (default for CC-56K2)**
&H1	V.90 only (56 kbps to 28 kbps)
&H2	**V.34 with automatic fallback (33.6 kbps to 300 bps) (default for CC-33K2)**
&H3	V.34 only (33.6 kbps to 2400 bps)
&H4	**ITU-T V.32bis with automatic fallback (14.4 kbps to 300 bps) (default for CC-14.4K2)**
&H5	ITU-T V.32bis only (14.4 kbps to 4800 bps)
&H6	ITU-T V.22bis only (2400 bps to 1200 bps)

© 2004, Copeland Communications, Inc.

Extended AT& Command Set (Command Defaults in Bold) (Continued)

Command	Action
&H7	ITU-T V.22 only (1200 bps)
&H8	Bell 212 only (1200 bps)
&H9	Bell 103 only (300 bps)
&H10	ITU-T V.21 only (300 bps)
&H11	V.23 (1200/75 bps)
&Pn	Japan pulse dialing
&P0	Configure modem for 10 pulse-per-second pulse dialing (Japan)
&P1	Configure modem for 20 pulse-per-second pulse dialing (Japan)
&Tn	Test mode
&T0	Cancel test mode (Escape to command mode to issue AT&T0). This command will also report the number of bit errors encountered on the previous &T4 test.
&T2	Initiate ITU-T V.54 (ANALOOP) test. Modulation set by &H AT command. Test loop is through the DSP (CC-14.4K2/CC-33K2/CC-56K2 only). The modem echoes data from TX pin back to RX pin.
&T3	Initiate ITU-T V.54 (ANALOOP) test. Modulation set by &H AT command. Test loop is through the DSP, DAA interface section, DAA interface and analog hybrid circuit. The modem echoes data from TX pin back to RX pin.
&T4	Initiate transmit as originating modem with automatic data generation. Modulation, data rate and symbol rate are set by &H, &G and S41. Data pattern is set by the S40 register. Continues until the ATH command is sent after an escape into command mode. Data is also demodulated as in ANALOOP, and any bit errors are counted to be displayed after the test using &T0.
&T5	Initiate transmit as answering modem with automatic data generation. Modulation, data rate, and symbol rate are set by &H, &G and S41. Data pattern is set by the S40 register. Continues until ATH command is sent after escape into command mode. Data is also demodulated as in ANALOOP, and any bit errors are counted to be displayed after the test using &T0.
&T6	Compute checksum for firmware-upgradeable section of program memory. If no firmware upgrade is installed, &T6 returns 0x0408.
&Xn	Automatic determination of telephone line type.
&X0	Abort &x1 or &x2 command

© 2004, Copeland Communications, Inc.

Extended AT& Command Set (Command Defaults in Bold) (Continued)

Command	Action
&X1	Automatic determination of telephone line type. Result code: WXYZn W: 0 = line supports DTMF dialing. 1 = line is pulse dial only. X: 0 = line supports 20 pps dialing. 1 = line supports 10 pps dialing only. Y: 0 = extension network present (PBX). 1 = outside line (PSTN) connected directly. Z: 0 = continuous dialtone 1 = make-break dialtone. n: 0-9 (number required for outside line if Y = 0)
&X2	Same as &X1, but Y result (PBX) is not tested.
*Y2A	Produce a constant answer tone (ITU-T) and return to command mode. The answer tone continues until the ATH command is received or the S7 timer expires.
&Z	Enter Low power wake-up on ring.

© 2004, Copeland Communications, Inc.

Extended AT% Command Set (Command Defaults in Bold)

Command	Action
%$	Display AT% command settings.
%B	Report blacklist. See also S42 register.
%Cn	Data compression
%C0	Disable V.42bis and MNP5 data compression
%C1	**Enable V.42bis in transmit and receive paths. If MNP is selected (\N2), then %C1 enables MNP5 in transmit and receive paths.**
%C2	Enable V.42bis in transmit path only.
%C3	Enable V.42bis in receive path only.
%On	Answer mode
%O1	**Modem will auto-answer a call in answer mode.**
%O2	Modem will auto-answer a call in originate mode.
%Vn	Automatic Line Status Detection After the %V1 and %V2 commands are issued, the modem will automatically check the telephone connection for weather or not a line is present. If a line is present, the modem will automatically check if the line is already in use. Finally, the modem will check line status both before going off-hook and again before dialing. %V1 uses the fixed method, and %V2 uses the adaptive method. %V0 (default) disables this feature.
%V0	**Disable automatic line-in-use detection.**
&V1	Automatic Line Status Detection - Fixed Method. Description: Before going off-hook with the ATD, ATO or ATA commands the modem compares the line voltage via LVCS to registers NOLN (U83) and LIUS (U84): **Loop Voltage** — **Action** 0 <= LVCS <= NOLN — Report "NO LINE" and remain on-hook. NOLN <= LVCS <= LIUS — Report "LINE IN USE" and remain on-hook. LIUS <= LCVS — Go off-hook and establish a modem connection. - One the call has begun, the off-hook intrusion algorithm operates normally. In addition, the modem will report "NO LINE" if the telephone line is completely disconnected. If the HOI bit (U77, bit11) is set, "LINE IN USE" is reported upon intrusion.
&V2	Automatic Line Status Detection - Adaptive Method. Description: Before going off-hook with the ATD, ATO or ATA commands, the modem compares the line voltage (via LVCS to the NLIU (U85) register: **Loop Voltage** — **Action** 0 <- LVCS <= (0.0625 x NLIU) — Report "NO LINE" and remain on-hook. (0.0625 x NLIU) < LVCS <= (0.85 x NLIU) — Report "LINE IN USE" and remain on-hook. (0.85 x NLIU) < LCVS — Go off-hook and establish a moden connection.

© 2004, Copeland Communications, Inc.

Extended AT\ Command Set (Command Defaults in Bold)

Command	Action
\$	Display AT\ command settings.
\Bn	Character length will be automatically set in autobaud mode.
\B0	6N1 - six data bits, no parity, one stop bit, one start bit, eight bits total (\N0 only)[1]
\B1	7N1 - seven data bits, no parity, one stop bit, one start bit, nine bits total (\N0 only)[1]
\B2	7P1 - seven data bits, parity options by \P, one stop bit, one start bit, 10 bits total.
\B3	**8N1 - eight data bits, no parity, one stop bit, one start bit, 10 bits total.**
\B5	8P1 - eight data bits, parity optioned by \P, one stop bit, one start bit, 11 bits total (\N0 only).
\B6	8X1 - eight data bits, one escape bit, one stop bit, one start bit, 11 bits total (enables ninth-bit escape mode).
\Nn	Asynchronous protocol.
\N0	Wire mode (no error correction, no compression).
\N2	MNP reliable mode. The modem attempts to connect with the MNP protocol. If unsuccessful, the call is dropped.
\N3	**V.42 auto-reliable - The modem attempts to connect with the V.42 protocol. If unsuccessful, the MNP protocol is attempted. If unsuccessful, wire mode is attempted.**
\N4	V.42 (LAPM) reliable mode (or drop call) - Same as \N3 except that the modem drops the call instead of connecting in MNP or wire mode.
\N5	V.42 and MNP reliable mode - The modem attempts to connect with V.42. If un successful, MNP is attempted. If MNP is unsuccessful, the call is dropped.
\Pn	Parity type will be automatically set in autobaud mode.
\P0	**Even**
\P1	Space[1]
\P2	Odd
\P3	Mark[1]
\Qn	Modem-to-DTE flow control.
\Q0	Disable all flow control - This may only be used if the DTE speed and the VF speed are guaranteed to match throughout the call.
\Q2	**Use CTS only.**
\Q3	Use RTS/CTS
\Q4	Use XON/XOFF flow control for modem-to-DTE interface. Does not enable modem-to-modem flow control.

© 2004, Copeland Communications, Inc.

Extended AT\ Command Set (Command Defaults in Bold) (Continued)

Command	Action
\Tn	DTE rate - Change DTE rate. When the modem is configured in autobaud mode (default), \T0 through \T15 will lock the new baud rate and disable autobaud.
\T0	300 bps
\T1	600 bps
\T2	1200 bps
\T3	2400 bps
\T4	4800 bps
\T5	7200 bps
\T6	9600 bps
\T7	12.0 kbps [2]
\T8	14.4 kbps
\T9	19.2 kbps [3]
\T10	38.4 kbps
\T11	57.6 kbps
\T12	115.2 kbps
\T13	230.4 kbps
\T14	245.760 kbps [2]
\T15	307.200 kbps
\T16	**Autobaud on[3]**
\T17	Autobaud off; locked at current baud rate.
\U	Causes a low pulse (25 ms) on RI and DCD. INT to be the inverse of ESC. RTS to be inverse of CTS. This command terminates with a RESET.
\Vn	Connect message type.
\V0	**Report connect message and protocol message.**
\V2	Report connect message only (exclude protocol message).
\V4	Report connect and protocol message with both upstream nad downstream connect rates.

Notes:

1. When in autobaud mode, \B0, \B1, and \P1 will not be detected automatically. The combination of \B2 and \P3 will be detected. This is compatible with 7N2. 7N1 may be forced by sending AT\T17\B1.
2. The autobaud feature does not detect this rate.
3. Default is \T16. \T9 may be defaulted as an order option. Contact the factory for details

© 2004, Copeland Communications, Inc.

Result Codes

Numeric	Meaning	Verbal Response	X0	X1	X2	X3	X4	X5
0	Command was successful	OK	X	X	X	X	X	X
1	Link established at 300 bps or higher	CONNECT	X	X	X	X	X	X
2	Incoming ring detected	RING	X	X	X	X	X	X
3	Link dropped	NO CARRIER	X	X	X	X	X	X
4	Command failed	ERROR	X	X	X	X	X	X
5	Link established at 1200	CONNECT 1200		X	X	X	X	X
6	Dial tone not present	NO DIALTONE			X		X	X
7	Line busy	BUSY				X	X	X
8	Remote not answering	NO ANSWER	X	X	X	X	X	X
9	Ringback detected	RINGING						X
10	Link established at 2400	CONNECT 2400		X	X	X	X	X
11	Link established at 4800	CONNECT 4800		X	X	X	X	X
12	Link established at 9600	CONNECT 9600		X	X	X	X	X
14	Link established at 19200	CONNECT 19200[1]		X	X	X	X	X
15	Link established at 7200	CONNECT 7200		X	X	X	X	X
16	Link established at 12000	CONNECT 12000		X	X	X	X	X
17	Link established at 14400	CONNECT 14400		X	X	X	X	X
18	Link established at 16800	CONNECT 16800[1]		X	X	X	X	X
19	Link established at 21600	CONNECT 21600[1]		X	X	X	X	X
20	Link established at 24000	CONNECT 24000[1]		X	X	X	X	X
21	Link established at 26400	CONNECT 26400[1]		X	X	X	X	X
22	Link established at 28800	CONNECT 28800[1]		X	X	X	X	X
23	Link established at 31200	CONNECT 31200[1]		X	X	X	X	X
24	Link established at 33600	CONNECT 33600[1]		X	X	X	X	X
30	Caller ID mark detected	CIDM	X	X	X	X	X	X
31	Hookswitch flash detected	FLASH	X	X	X	X	X	X
32	UK CID State Tone Alert Signal detected	STAS	X	X	X	X	X	X
33	Overcurrent condition	X[2]	X	X	X	X	X	X
40	Blacklist is full	BLACKLIST FULL (enabled via S42 register)	X	X	X	X	X	X
41	Attempted number is blacklisted	BLACKLISTED (enabled via S42 register)	X	X	X	X	X	X
42	No phone line present	NO LINE (enabled via %Vn commands)	X	X	X	X	X	X

Notes:

1. When in autobaud mode, \B0, \B1, and \P1 will not be detected automatically. The combination of \B2 and \P3 will be detected. This is compatible with 7N2. 7N1 may be forced by sending AT\T17\B1.
2. The autobaud feature does not detect this rate.
3. Default is \T16. \T9 may be defaulted as an order option. Contact the factory for details

© 2004, Copeland Communications, Inc.

Result Codes (Continued)

Numeric	Meaning	Verbal Response	X0	X1	X2	X3	X4	X5
43	Telephone line is in use	LINE IN USE	X	X	X	X	X	X
44	A polarity reversal detected	POLARITY REVERSAL	X	X	X	X	X	X
45	A reversal NOT detected	NO POLARITY REVERSAL	X	X	X	X	X	X
52	Link established at 56000	CONNECT 56000[3]		X	X	X	X	X
60	Link established at 32000	CONNECT 32000[3]		X	X	X	X	X
61	Link establis hed at 48000	CONNECT 48000[3]		X	X	X	X	X
63	Link established at 28000	CONNECT 28000[3]		X	X	X	X	X
64	Link established at 29333	CONNECT 29333[3]		X	X	X	X	X
65	Link established at 30666	CONNECT 30666[3]		X	X	X	X	X
66	Link established at 33333	CONNECT 33333[3]		X	X	X	X	X
67	Link established at 34666	CONNECT 34666[3]		X	X	X	X	X
68	Link established at 36000	CONNECT 36000[3]		X	X	X	X	X
69	Link established at 37333	CONNECT 37333[3]		X	X	X	X	X
70	No protocol	PROTOCOL: NONE	Set with \V0 command					
75	Link established at 75	CONNECT 75		X	X	X	X	X
77	V.42 protocol	PROTOCOL: V42	Set with \V0 command					
79	V.42bis protocol	PROTOCOL: V42bis	Set with \V0 command					
80	MN P2 protocol	PROTOCOL: ALTERNATE, + CLASS 2	Set with \V command					
81	MNP3 protocol	PROTOCOL: ALTERNATE, + CLASS 3	Set with \V command					
82	MNP4 protocol	PROTOCOL: ALTERNATE, + CLASS 4	Set with \V command					
83	MNP5 protocol	PROTOCOL: ALTERNATE, + CLASS 5	Set with \V command					
90	Link established at 38666	CONNECT 38666[3]		X	X	X	X	X
91	Link established at 40000	CONNECT 40000[3]		X	X	X	X	X
92	Link established at 41333	CONNECT 41333[3]		X	X	X	X	X
93	Link established at 42666	CONNECT 42666[3]		X	X	X	X	X
94	Link established at 44000	CONNECT 44000[3]		X	X	X	X	X
95	Link established at 45333	CONNECT 45333[3]		X	X	X	X	X
96	Link established at 46666	CONNECT 46666[3]		X	X	X	X	X
97	Link established at 49333	CONNECT 49333[3]		X	X	X	X	X
98	Link established at 50666	CONNECT 50666[3]		X	X	X	X	X
99	Link established at 52000	CONNECT 52000[3]		X	X	X	X	X
100	Link established at 53333	CONNECT 53333[3]		X	X	X	X	X
101	Link established at 54666	CONNECT 54666[3]		X	X	X	X	X
102	DTMF dial attempt on pulse dial only line	UN-OBTAINABLE NUMBER	X	X	X	X	X	X

1. This message only supported on CC-56K2 and CC-33K2
2. X is the only verbal response code that does not follow the <CR><LF> Result Code<CRF><LF> standard. There is no leading <CR><LF>
3. This message is only supported on the CC-56K2

© 2004, Copeland Communications, Inc.

S-Registers

The S command allows reading (Sn?) or writing (Sn = x) the S-registers. The S-registers store values for functions that typically are rarely changed, such as timers or counters, and the ASCII values of control characters such as carriage return. The following table summarizes the S-register set.

© 2004, Copeland Communications, Inc.

S Register Definition

S-Register (Decimal)	Function	Default (Decimal)	Range	Units
0	Automatic answer - Number of rings the modem must detect before answering a call. 0 disables auto answer.	0	0 - 255	Rings
1	Ring counter.	0	0 - 255	Rings
2	ESC code character.	43 (+)	0 - 255	ASCII
3	Carriage return character.	13 (CR)	0 - 255	ASCII
4	Linefeed character.	10 (LF)	0 - 255	ASCII
5	Backspace character.	08 (BS)	0 - 255	ASCII
6	Dial tone wait timer - Number of seconds the modem waits before blind dialing. Only applicable if blind dialing is enabled (X0, X1, X3).	02	0 - 255	seconds
7	Carrier wait timer - Number of seconds the modem waits for carrier before timing out. This register also sets the number of seconds the modem waits for ring-back when originating a call before hanging up.	80	0 - 255	seconds
	This register also sets the number of seconds the answer tone will continue while using the AT*Y2A command.			
8	Dial pause timer for , and < dial command modifiers.	02	0 - 255	seconds
9	Carrier presence timer - Time after a loss of carrier that a carrier must be detected before reactivating DCD. S9 is referred to as "carrier loss debounce time".	06	1 - 255	0.1 second
10	Carrier loss timer - Time the carrier must be lost before the modem disconnects. Setting 255 disables disconnect entirely. If S10 is less than S9, even a momentary loss of carrier causes a disconnect.	14	1 - 255	0.1 second
12	Escape code guard timer - Minimum guard time required before and after "+++" for the modem to recognize a valid escape sequence.	50	1 - 255	0.02 second
14	Wait for dial tone delay value (in relation to the W dial modifier). Starts when "W" is executed in the dial string.	12	0 - 255	seconds

© 2004, Copeland Communications, Inc.

S-Register Description (Continued)

S-Register (Decimal)	Function	Default (Decimal)	Range	Units
42	Blacklisting - The modem will not dial the same number fore than two times in three minutes. An attempt to dial a 3rd time will result in a "BLACKLISTED" result code. If the blacklist memory is full, any dial to a new number will result in a "BLACKLIST FULL" result code. Numbers are added to the blacklist only if the modem connection fails. The %B command will list the numbers on the blacklists 0 = disabled **1 = enabled**	0 (disabled)	0-1	
43	Dial attempts to blacklist. When blacklisting is enabled with S42, this value controls the number of dial attempts that will result in a number being blacklisted.	4	0-4	-
44	Blacklist Timer. Period during which blacklisting is active	180	0-255	seconds
50	Minimum on-hook time - The modem will remain on-hook for S50 seconds. Any attempt to go off-hook will be delayed until this timer expires.	3	0 - 255	seconds
51	Number to start checking for an outside line on a PBX.	1	0 - 9	-

© 2004, Copeland Communications, Inc.

User-Access Registers (U-Registers)

The :U AT command is used to write these 16-bit U-Registers and the :R command is used to read them. U-registers are identified by a hexadecimal (hex) address.

Register	Name	Description	Default
U00	DT1A0	DT1 registers set the coefficients for stage 1 of the Dial Tone Detect filter. Default is for FCC countries.	0x0800
U01	DT1B1		0x0000
U02	DT1B2		0x0000
U03	DT1A2		0x0000
U04	DT1A1		0x0000
U05	DT2A0	Dial tone detect filters stage 2 biquad coefficients.	0x00A0
U06	DT2B1		0x6EF1
U07	DT2B2		0xC4F4
U08	DT2A2		0xC000
U09	DT2A1		0x0000
U0A	DT3A0	Dial tone detect filters stage 3 biquad coefficients.	0x00A0
U0B	DT3B1		0x78B0
U0C	DT3B2		0xC305
U0D	DT3A2		0x4000
U0E	DT3A1		0xB50A
U0F	DT4A0	Dial tone detect filters stage 4 biquad coefficients.	0x0400
U10	DT4B1		0x70D2
U11	DT4B2		0xC830
U12	DT4A2		0x4000
U13	DT4A1		0x80E2
U14	DTK	Dial tone detect filter output scalar.	0x0009
U15	DTON	Dial tone detect ON threshold.	0x00A0
U16	DTOF	Dial tone detect OFF threshold.	0x0070

© 2004, Copeland Communications, Inc.

User-Access Registers (continued)

Register	Name	Description	Default
U17	BT1A0	BT1 registers set the coefficients fo stage 1 of the Busy Tone Detect filter. Default is for FCC countries.	0x0800
U18	BT1B1		0x0000
U19	BT1B2		0x0000
U1A	BT1A2		0x0000
U1B	BT1A1		0x0000
U1C	BT2A0	Busy tone detect filter stage 2 biquad coefficients.	0x00A0
U1D	BT2B1		0x6EF1
U1E	BT2B2		0xC4F4
U1F	BT2A2		0xC000
U20	BT2A1		0x0000
U21	BT3A0	Busy tone detect filter stage 3 biquad coefficients.	0x00A0
U22	BT3B1		0x78B0
U23	BT3B2		0xC305
U24	BT3A2		0x4000
U25	BT3A1		0xB50A
U26	BT4A0	Busy tone detect filter stage 4 biquad coefficients.	0x0400
U27	BT4B1		0x70D2
U28	BT4B2		0xC830
U29	BT4A2		0x4000
U2A	BT4A1		0x80E2
U2B	BTK	Busy tone detect filter output scalar.	0x0009
U2C	BTON	Busy tone detect ON threshold.	0x00A0
U2D	BTOF	Busy tone detect OFF threshold.	0x0070
U2E	BMTT	Busy cadence minimum total time in seconds multiplied by 7200.	0x0870
U2F	BDLT	Busy cadence delta in seconds multiplied by 7200.	0x25F8
U30	BMOT	Busy cadence minimum on time in seconds multiplied by 7200.	0x0438
U31	RMTT	Ringback cadence minimum total time in seconds multiplied by 7200.	0x4650
U32	RDLT	Ringback cadence delta in seconds multiplied by 7200.	0xEF10

© 2004, Copeland Communications, Inc.

User-Access Registers (continued)

Register	Name	Description	Default
U33	RMOT	Ringback cadence minimum on time in seconds multiplied by 7200.	0x1200
U34	DTWD	Window to look for dialtone in seconds multiplied by 1000.	0x1B58
U35	DMOT	Minimum dialtone on time in seconds multiplied by 7200.	0x2D00
U37	PD0	Number of pulses to dial 0.	0x000A
U38	PD1	Number of pulses to dial 1.	0x0001
U39	PD2	Number of pulses to dial 2.	0x0002
U3A	PD3	Number of pulses to dial 3.	0x0003
U3B	PD4	Number of pulses to dial 4.	0x0004
U3C	PD5	Number of pulses to dial 5.	0x0005
U3D	PD6	Number of pulses to dial 6.	0x0006
U3E	PD7	Number of pulses to dial 7.	0x0007
U3F	PD8	Number of pulses to dial 8.	0x0008
U40	PD9	Number of pulses to dial 9.	0x0009
U42	PDBT	Pulse dial break time (ms units).	0x003D
U43	PDMT	Pulse dial make time (ms units).	0x0027
U45	PDIT	Pulse dial interdigit\ time (ms units).	0x0320
U46	DTPL	DTMF power level. 16-bit format is 0x0(H)(L)0 where H is the (-) dBm level of the high frequency DTMF tone and L is the (-) dBm level of the low-frequency DTMF tone. Note that twist may be specified here.	0x09B0
U47	DTNT	DTMF on time (ms units).	0x0064
U48	DTFT	DTMF off time (ms units).	0x0064
U49	RGFH	Ring frequency high - Maximum frequency ring to be considered a valid ring. RGFH = 2400/(maximum ring frequency).	0x0022
U4A	RGFD	Ring delta RGFD = 2400 Hz x (1/min ring freq (Hz)) - (1/max ring freq (Hz))	0x007A
U4B	RGMN	Ring cadence minimum ON time in seconds multiplied by 2400.	0x0258
U4C	RGNX	Ring cadence maximum total time in seconds multiplied by 2400.	0x007A
U4D	MOD1	bit-mapped register.	0x0000
U4E	PRDD	Pre-dial delay-time after ATD command that modem waits to dial (ms units). The modem stays on-hook during this time.	0x0000

© 2004, Copeland Communications, Inc.

User-Access Registers (continued)

Register	Name	Description	Default
U4F	FHT	Flash Hook Time. Time corresponding with "!" or "&" dial modifier that the modem goes on-hook during a flash hook (ms units).	0x01F4
U50	LCDN	Loop current debounce on time (ms units).	0x015E
U51	LCDF	Loop current debounce off time (ms units).	0x00C8
U52	XMTL	Transmit level (1 dB units) - Sets the modem data pump transmitter level. Default level of 0 corresponds to -9.86dBm. Transmit level = -(9.85 + XMTL dBm. Range = -9.85 to -48.	0x0000
U53	MOD2	This is a bit-mapped register.	0x0000
U62	DAAC1	This is a bit-mapped register.	0x0804
U63	DAAC3	This is a bit-mapped register.	
U65	DAAC4	This is a bit-mapped register.	0x00E0
U66	DAAC5	This is a bit-mapped register.	0x0040
U67	ITC1	This is a bit-mapped register.	0x0008
U68	ITC2	This is a bit-mapped register.	0x0000
U6A	ITC4	This is a bit-mapped register.	N/A
U6C	LVS	This is a bit-mapped register.	0x0000
U6E	CK1	This is a bit-mapped register.	0x1F20
U6F	PTMR	This is a bit-mapped register.	0x00FF
U70	IO0	This is a bit-mapped register.	0x2700
U71	IO1	This is a bit-mapped register.	0x0000
U76	GEN1	This is a bit-mapped register.	0x3240
U77	GEN2	This is a bit-mapped register.	0x401E
U78	GEN3	This is a bit-mapped register.	0x0000
U79	GEN4	This is a bit-mapped register.	0x0000
U7A	GENA	This is a bit-mapped register.	0x0000
U83	NOLN	No-Line threshold. If %V1 is set, NOLN sets the threshold for determination of line present vs. line not present.	0x0001
U84	LIUS	Line-in-use threshold. If %V1 is set, LIUS sets the threshold for determination of line in use vs. line not in use.	0x0007
U85	NLIU	Line-in-use/No line threshold. If %V2 is set, NLIU sets the threshold reference for the adaptive algorithm (see %V2).	0x0000
U86	V9AGG	V.90 rate adjustment for Japan (1333 BPS units).	0x0000

© 2004, Copeland Communications, Inc.

User-Access Registers (continued)

Register	Name	Description	Default
U87	SAM	This is a bit-mapped register.	0x0000
U9F	SASF	SAS frequency detection.	0x0000
UA0	SC0	SAS cadence 0. Sets the duration of the first SAS tone (ms).	0x01E0
UA1	SC1	SAS cadence 1. Sets the duration of the first SAS silence (ms).	0x0000
UA2	SC2	SAS cadence 2. Sets the duration of the second SAS tone (ms).	0x0000
UA3	SC3	SAS cadence 3. Sets the duration of the second SAS silence (ms).	0x0000
UA4	SC4	SAS cadence 4. Sets the duration of the third SAS tone (ms).	0x0000
UA5	SC5	SAS cadence 5. Sets the duration of the third SAS silence (ms).	0x0000
UA6	SC6	SAS cadence 6. Sets the duration of the forth SAS tone (ms).	0x0000
UA7	SC7	SAS cadence 7. Sets the duration of the forth SAS silence (ms).	0x0000
UA8	SC8	SAS cadence 8. Sets the duration of the fifth SAS tone (ms).	0x0000
UA9	SC9	SAS cadence 9. Sets the duration of the firth SAS silence (ms).	0x0000
UAA	V29MODE	This is a bit-mapped register.	0x0000

© 2004, Copeland Communications, Inc.

Bit Mapped U-Register Summary

Reg.	Name	Bit 15	Bit 14	Bit 13	Bit 12	Bit 11	Bit 10	Bit 9	Bit 8	Bit 7	Bit 6	Bit 5	Bit 4	Bit 3	Bit 2	Bit 1	Bit 0
U4D	MOD1		TOCT		NHFP	NHFD	CLPD		FTP	SPDM		GT18	GT55	CTE			
U53	MOD2	REV															
U62	DAAC1								OHS2						FOH	DL	
U63	DAAC3	LCS[:0]								ACT[3:0]							
U65	DAAC4		PWMG	PDN									PDL				
U66	DAAC5										FDT						
U67	ITC1			MIN[1:0]				ILIM		DCR	OHS			DCV[1:0]		RZ	RT
U68	ITC2														BTE	ROV	BTD
U6A	ITC4														OVL		
U6C	LVS	LVS[7:0]															
U6E	CK1				RI[4:0]												
U70	IO0	HES		TES	CIDM	OCDM	PPDM	RIM	DCDM				CID	OCD	PPD	RI	DCD
U71	IO1												COMP				PRT
U76	GEN1	OHSR[7:0]							FACL	DCL[2:0]			ACL[4:0]				
U77	GEN2	IST[3:0]				HOI		AOC	OHT[8:0]								
U78	GEN3	IB[1:0]								IS[7:0]							
U79	GEN4												LVCS[4:0]				
U7A	GENA									DOP	ADD				V22HD	HDLC	FAST
U7C	GENC												RIGPO				RIG-POEN
U7D	GEND		NLM													ATZD	FDP
U87	SAM						MINT	SERM	FSMS	XMTT							
UAA	V29MODE															V29ENA	

© 2004, Copeland Communications, Inc.

Bit Mapped U-Register Detail (defaults in bold)

U4D MOD1

Bit	D15	D14	D13	D12	D11	D10	D9	D8	D7	D6	D5	D4	D3	D2	D1	D0
Name		TOCT		NHFP	NHFD	CLPD	CCAD	FTP	DSPDM		DGT18	GT55	CTE			
Type		R/W		R/W	R/W	R/W	R/W	R/W	R/W		R/W	R/W	R/W			

Reset Settings = 0x0000

Bit	Name	Function
15	Reserved	Read returns 0.
14	TOCT	**Turn Off Calling Tone.**
		0 = Disable.
		1 = Enable.
13	Reserved	Read returns 0.
12	NHFP	**No Hook Flas h Pulse.**
		0 = Disable.
		1 = Enable.
11	NHFD	**No Hook Flash Dial.**
		0 = Disable.
		1 = Enable.
10	CLPD	**Check Loop Current Before Dialing.**
		0 = Ignore.
		1 = Check.
9	Reserved	Read returns 0.
8	FTP	**Force Tone or Pulse.**
		0 = Disable.
		1 = Enable.
7	SPDM	**Skip Pulse Dial Modifier.**
		0 = No.
		1 = Yes.
6	Reserved	Read returns 0.
5	GT18	**1800 Hz Guard Tone Enable**
		0 = Disable.
		1 = Enable.
4	GT55	**550 Hz Guard Tone Enable.**
		0 = Disable.
		1 = Enable.
3	CTE	**Calling Tone Enable.**
		0 = Disable.
		1 = Enable.
2:0	Reserved	Read returns 0.

© 2004, Copeland Communications, Inc.

U53 MOD2

Bit	D15	D14	D13	D12	D11	D10	D9	D8	D7	D6	D5	D4	D3	D2	D1	D0
Name	REV															
Type	R/W															

Reset settings = 0x0000

Bit	Name	Function
15	REV	**V.23 Reversing**
		0 = Disable.
		1 = Enable.
14:00	Reserved	Read returns 0.

U62 DAAC1

Bit	D15	D14	D13	D12	D11	D10	D9	D8	D7	D6	D5	D4	D3	D2	D1	D0
Name	0	0	0	0	1	0	0	OHS2	0	0	0	0	0	FOH	DL	0
Type	R/W													R/W	R/W	

Reset settings = 0x0804

Bit	Name	Function
15:12	Reserved	Must be set to 0.
11	Reserved	Must be set to 1.
10:9	Reserved	Must be set to 0.
8	OHS2	**Oh-Hook Speed 2.**
		This bit works in combination with the OHS bit (U67 bit 6) to set the on-hook speed. The on-hook speeds are measured from the time the OH bit is cleared until loop current equals zero.
		OHS OHS2 Mean On-Hook Speed
		0 0 Less than 0.5ms
		0 1 3 ms ± 10% (meets ETSI standard)
		1 X 26 ms ± 10% (meets Australia spark quenching spec)
7:3	Reserved	**Must be set to 0.**
2	FOH	**Fast Off-Hook.**
		0 = Automatic Calibration Time set to 426 ms.
		1 = Automatic Calibration Time set to 106 ms.
1	DL	**Isolation Digital Loopback (see the AT&T commands).**
		0 = Loopback occurs beyond the DAA interface, out to and including the analog hybrid circuit.
		1 = Enables digital loopback mode across isolation barrier only.
0	Reserved	Must be set to 0.

© 2004, Copeland Communications, Inc.

U63 DAAC3

Bit	D15	D14	D13	D12	D11	D10	D9	D8	D7	D6	D5	D4	D3	D2	D1	D0
Name	LCS[7:0]								ACT[3:0]							
Type	R/W															

Rest settings = 0x0003

Bit	Name	Function
15:8	lcs[7:0]	**Off-Hook Loop Current (1.1 mA/bit).**
7:4	ACT[3:0]	**AC Termination Select.**
		ACT[3:0] AC Termination
		0000 Real 600 ?
		0011 220? + (820? || 120nF) and 220? + (820? || 115nF)
		0100 370? + (620? || 310nF)
		1111 Global complex impedance
3:0	Reserved	Read returns 0x3.

U65 DAAC4

Bit	D15	D14	D13	D12	D11	D10	D9	D8	D7	D6	D5	D4	D3	D2	D1	D0
Name		PWMG	PDN									PDL				
Type	R/W		R/W	R/W								R/W				

Reset settings = 0x00E0

Bit	Name	Function
15	Reserved	Read returns 0.
14	TOCT	**PWM Gain.** **0 = No gain.** 1 = 6 dB gain applied to AOUT.
13	PDN	**Powerdown.** **Completely powerdown the modem chipset. Once set to 1, the modem must be reset to power on.** 0 = Normal 1 = Powerdown.
12:8	Reserved	**Read returns 0.**
7:5	Reserved	**Must not change in a read-modify-write.**
4	PDL	**Powerdown Line-Side Chip. (Typically used only for debug)**
		0 = Normal operation.
		1 = Places Line side into powerdown mode.
3:0	Reserved	Must not change in read-modify-write.

© 2004, Copeland Communications, Inc.

U66 DAAC5

Bit	D15	D14	D13	D12	D11	D10	D9	D8	D7	D6	D5	D4	D3	D2	D1	D0
Name										FDT						
Type	R															

Reset settings = 0x0040

Bit	Name	Function
15:7	Reserved	Read returns 0.
6	FDT	**Frame Detect. (Typically used only for board-level debug)** 0 = Indicates the modem has not established frame lock. 1 = Indicates modem frame lock has been established.
5:4	Reserved	Read returns 0.
3:0	Reserved	Do not modify.

© 2004, Copeland Communications, Inc.

U67 ITC1

Bit	D15	D14	D13	D12	D11	D10	D9	D8	D7	D6	D5	D4	D3	D2	D1	D0
Name			MINI[1:0]				ILIM		DCR	OHS			DCV[1:0]		RZ	RT
Type	R/W						R/W		R/W	R/W			R/W		R/W	R/W

Reset settings = 0x0008

Bit	Name	Function
15:14	Reserved	Read returns 0.
13:12	MINI[1:0]	**Minimum Operational Loop Current.** Adjusts the minimum loop current at which the DAA can operate. Increasing the minimum operational loop current can improve the signal headroom at a lower TIP/RING Voltage. **MINI[1:0] Min Loop Current** **00 10 mA** 01 12 mA 10 14 mA 11 16 mA
11:10	Reserved	Read returns 0.
9	ILIM	**Current Limiting Enable.** **0 = Current limiting mode disabled.** 1 = Current limiting mode enabled. This mode limits loop current to a maximum of 60 mA per the TBR21 standard.
8	Reserved	Read returns 0.
7	DCR	**DC Impedance Selection.** **0 - Normal DC Impedance. This mode should be used for all standard applications.** 1 = 800? DC termination.
6	OHS	**On-Hook Speed.** This bit works in combination with the OHS2 bit (U62, bit 8) to set the on-hook speed. The on-hook speeds are measured from the time the OH bit is cleared until loop current equals zero. **OHS OHS2 Mean On-Hook Speed** 0 0 Less than 0.5 ms 0 1 3ms ± 10% (meets ETSI standard) 1 X 26 ms ± 10% (meets Australia spark quenching spec)
5:4	Reserved	Read returns 0.
3:2	DCV[1:0	**TIP/RING Voltage Adjust.** **These bits affect the TIP/RING voltage on the line. Low voltage countries should use a lower TIP/RING voltage. Raising the TIP/RING voltage can improve signal headroom.** **DCV[1:0] DCT Voltage** 00 3.1V 01 3.2V **10 3.35V** 11 3.5V

© 2004, Copeland Communications, Inc.

Bit	Name	Function
1	RZ	**Set this bit to 0.**
0	RT	**Ringer Threshold Select.** Used to satisfy country requirements on ring detection. Signals below the lower level does not generate a ring detection; signals above the upper level are guaranteed to generate a ring detection. **0 = 11 to 22 V_{rms}** 1 = 17 to 33 V_{rms}

U68 ITC2

Bit	D15	D14	D13	D12	D11	D10	D9	D8	D7	D6	D5	D4	D3	D2	D1	D0
Name														BTE	ROV	BTD
Type														R/W	R/W	R/W

Reset settings = 0x0000

Bit	Name	Function
15:3	Reserved	Do not modify.
2	BTE	**Billing Tone Protect Enable.** **0 = Disabled.** 1 = Enabled. When set, the DAA responds automatically to a collapse of the line-derived power supply during a billing tone event. When off-hook, if BTE = 1 and BTD goes high, the dc termination is released (800? presented to the line). If BTE and RIM (U70, bit 9) are set, an RI (U70, bit1) interrupt also occurs when BTD goes high.
1	ROV	**Receive Overload.** The bit is set when the receive input has an excessive input level. This bit is cleared by writing a 0 to this location. **0 = Normal receive input level.** 1 = Excessive receive input level.
0	BTD	**Billing Tone Detected.** This bit is set if a billing tone is detected. This bit is cleared by writing a 0 to this location. **0 = No billing tone.** 1 = Billing tone detected.

© 2004, Copeland Communications, Inc.

U6A ITC4

Bit	D15	D14	D13	D12	D11	D10	D9	D8	D7	D6	D5	D4	D3	D2	D1	D0
Name														OVL		
Type														R		

Reset settings = N/A

Bit	Name	Function
15:3	Reserved	Do not modify.
2	OVL	**Overload Detected.** This bit has the same function as ROV, but clears itself after the overload has been removed. This bit is not affected by the BTE bit.
1:0	Reserved	**Do not modify.**

U6C LVS

Bit	D15	D14	D13	D12	D11	D10	D9	D8	D7	D6	D5	D4	D3	D2	D1	D0
Name	LVS[7:0]															
Type	R															

Reset settings = 0x0000

Bit	Name	Function
15:8	LVS[7:0]	Line Voltage Status. Eight bit signed, two's compliment number representing the tip/ring voltage. Each bit represents 1V. Polarity of the voltage is represented by the MSB (sign bit). 0000_0000 = Measured voltage is < 3V.
7:0	Reserved	Read returns zero.

U6E CK1

Bit	D15	D14	D13	D12	D11	D10	D9	D8	D7	D6	D5	D4	D3	D2	D1	D0
Name				R1[4:0]												
Type	R/W															

Reset settings = 0x1F20

Bit	Name	Function
15:13 12:8	Reserved R1[4:0]	Do not modify. R1 CLKOUT Divider See "World Modem II Programmer's Guide for details.
7:0	Reserved	Read returns 0.

© 2004, Copeland Communications, Inc.

U70 IO0

Bit	D15	D14	D13	D12	D11	D10	D9	D8	D7	D6	D5	D4	D3	D2	D1	D0
Name	HES		TES	CIDM	OCDM	PPDM	RIM	DCDM	0			CID	OCD	PPD	RI	DCD
Type	R/W		R/W	R/W	R/W	R/W	R/W	R/W				R/W	R/W	R/W	R/W	R/W

Reset settings = 0x2700

Bit	Name	Function
15	HES	**Hardware Escape Pin.**
		0 = Disable.
		1 = Enable.
14	Reserved	Read returns 0.
13	TES	**Enable "+++" Escape.**
		0 = Disable.
		1 = Enable.
12	CIDM	**Caller ID Mask.**
		0 = Change in CID will not affect INT.
		1 = A low to high transition in CID activates INT#.
11	OCDM	**Overcurrent Detect Mask.**
		0 = Change in OCD does not affect INT. ("X" result code is not generated in command mode.)
		1 = A low to high transition in OCD will activate INT. ("X" result code is generated in command mode.)
10	PPDM	**Parallel Phone Detect Mask.**
		0 = Change in RI does not affect INT#.
		1 = A low to high transition in will activate INT.
9	RIM	**Ring Indicator.**
		0 = Change in RI does not affect INT#.
		1 = A low to high transition in RI activates INT.
8	DCDM	**Data Carrier Detect Mask**
		0 = Change in DCD does not affect INT#.
		1 - A high to low transition in DCD (U70, but 0), which indicates loss of carrier, activates INT.
7	Reserved	**Must be set to zero.**
6:5	Reserved	Read returns 0.
4	CID	**Caller ID (sticky).**
		Caller ID Preamble has been detected; data will soon follow. Clears on :I read.
3	OCD	**Overcurrent Detect (sticky).**
		Overcurrent condition has occurred. Clears on :I read.
2	PPD	**Parallel Phone Detect (sticky).**
		Parallel phone detected since last off-hook event. Clears on :I read.
1	RI	**Ring Indicator.**
		Active high bit when the modem is on-hook, indicates ring event has occurred. Clears on :I read.
0	DCD	**Data Carrier Detect (status).**
		Active high bit indicates carrier detected (equivalent to inverse of DCD# pin).

© 2004, Copeland Communications, Inc.

U71 IO1

Bit	D15	D14	D13	D12	D11	D10	D9	D8	D7	D6	D5	D4	D3	D2	D1	D0
Name												COMP				PRT
Type												R/W				R/W

Reset settings = 0x0000

Bit	Name	Function
15:5	Reserved	**Read returns zero.**
4	COMP	0 = Disables compression (PCM mode). 1 = Enables linear compression.
3:1	Reserved	Read returns zero.
0	PRT	**0 = Disables PCM mode.** 1 = Enables PCM mode.

U76 GEN1

Bit	D15	D14	D13	D12	D11	D10	D9	D8	D7	D6	D5	D4	D3	D2	D1	D0
Name	OHSR[6:0]							FACL	DCL[2:0]			ACL[4:0]				
Type	R/W															

Reset settings = 0x0000

Bit	Name	Function
15:5	OHSR[6:0]	**Off-Hook Sample Rate (40 ms units).** Sets the sample rate for the off-hook intrusion algorithms (1 second default).
8	FACL	**Force ACL.** **0 = While off-hook, ACL is automatically updated with LVCS.** 1 = While off-hook, ACL does not change from the value written to it while on-hook.
7:5	DCL[2:0]	**Differential Current Level (3 mA units).** Sets the differential level between ACL and LVCS that will trigger an off-hook PPD interrupt (default = 2).
4:0	ACL[4:0]	**Absolute Current Level (3 mA units).** ACL represents the value of LVCS current when the modem is off-hook and all parallel phone are on-hook. If ACL = 0, it is ignored by the off-hook intrusion algorithm. The modem will also write ACL with the contents of LVCS before and intrusion and before going on-hook (default = 0)

© 2004, Copeland Communications, Inc.

U77 GEN2

Bit	D15	D14	D13	D12	D11	D10	D9	D8	D7	D6	D5	D4	D3	D2	D1	D0
Name	IST[3:0]				HOI		AOC	OHT[8:0]								
Type	R/W															

Reset settings = 0x401E

Bit	Name	Function
15:12	IST[3:0]	**Intrusion Settling Time (250 ms units).** Delay between when the modem goes off-hook and the off-hook intrusion algorithm begins. Default is 1 s.
11	HOI	**Hang-Up On Intrusion.** **0 = Modem will not automatically hang up when and off-hook PPD interrupt occurs.** 1 = Modem automatically hangs up on a PPD interrupt. If %Vn command are set, HOI also causes the "LINE IN USE" result code upon PPD interrupt.
10	Reserved	Read returns zero.
9	AOC	**Auto Overcurrent.** **0 = Disable** 1 = Enable Note: AOC may falsely detect an overcurent condition in the presence of line reversals or other transients. Therefore, it should not be used where line reversals are common or may be expected.
8:0	OHT[8:0]	**Off-Hook Time (1 ms units).** Time before LVCS is checked for overcurrent condition after going off-hook (30 ms default).

© 2004, Copeland Communications, Inc.

U78 GEN3

Bit	D15	D14	D13	D12	D11	D10	D9	D8	D7	D6	D5	D4	D3	D2	D1	D0
Name	IB[1:0]								IS[8:0]							
Type	R/W															

Reset settings = 0x0000

Bit	Name	Function
15:14	IB[1:0]	**Intrusion Blocking.** Defines the method used to block the off-hook intrusion algorithm from operation after dialing has begun.
		0 = No intrusion blocking. 1 = Intrusion disabled from start of dial to end of dial. 2 = Intrusion disabled from start of dial to IS register time-out. 3 = Intrusion disabled from start of dial to connect ("CONNECT XXX", "NO DIALTONE", or "NO CARRIER").
13:8	Reserved	Read returns zero.
7:0	IS[8:0]	**Intrusion Suspend (500 ms units).** When IB = 2, this register sets the length of time from when the dialing begins that the off-hook intrusion algorithm is blocked (suspended) (default = 00000000b).

© 2004, Copeland Communications, Inc.

U79 GEN4

Bit	D15	D14	D13	D12	D11	D10	D9	D8	D7	D6	D5	D4	D3	D2	D1	D0
Name												LVCS[4:0]				
Type	R															

Reset settings = 0x0000

Bit	Name	Function
15:5	Reserved	Read returns 0.
4:0	LVCS[4:0]	**Line Voltage Current Sense.** Represents either the line voltage, loop current, or on-hook line monitor. **On-Hook Voltage Monitor (2.75 V/bit ±20%)** 00000 = No line connected. 00001 = Minimum line voltage (V_{min} = 3.0V ± 0.5V). 11111 = Maximum line voltage (87V ± 20%) Off-Hook Loop Current Monitor (3 mA/bit). 00000 = No loop current. 00001 = Minimum loop current. 11110 = Maximum loop current. 11111 = Loop current is excessive (overload). Overload > 140 mA in all modes except TBR21 Overload > 54 mA in TBR21 mode

© 2004, Copeland Communications, Inc.

U7A GENA

Bit	D15	D14	D13	D12	D11	D10	D9	D8	D7	D6	D5	D4	D3	D2	D1	D0
Name								DOP	ADD					V22HD	HDLC	FAST
Type	R/W															

Reset settings = 0x0000

Bit	Name	Function
15:8	Reserved	Read returns zero.
7	DOP	**Dial or pulse** **0 = Normal ATDTW operation** 1 = Use ATDTW for Pulse/Tone Dial Detection (see also ATDW command)
6	ADD	**Adaptive Dialing** 0 = Disable. **1 = Enable.** Attempt DTMF dial the fall back to pulse dial if unsuccessful. First digit is dialed as DTMF. If a dialtone is still present after two seconds, the modem will redial as pulse. If no dialtone detected after two seconds, the modem will continue to dial as DTMF.
5:3	Reserved	Read returns zero.
2	V22HD	**V.22bis Synchronous Mode*** **0 = Normal ATDTW operation** 1 = Use ATDTW for Pulse/Tone Dial Detection (see also ATDW command)
1	HDLC	**Synchronous Mode*** **0 = Normal asynchronous mode.** 1 = Transparent HDLC mode.
0	FAST	**Fast Connect*** **0 = Normal modem handshake timing per ITU/Bellcore standards.** 1 = Fast connect modem handshake timing.
*Note: When V22HD, HDLC or FAST bits are set \N0 (wire mode) must be used.		

© 2004, Copeland Communications, Inc.

U7C GENC

Bit	D15	D14	D13	D12	D11	D10	D9	D8	D7	D6	D5	D4	D3	D2	D1	D0
Name												RIGPO				RIGPOEN
Type												R				R/W

Reset settings = 0x0000

Bit	Name	Function
15:5	Reserved	Read returns zero.
4	RIGPO	**RI#** RI#, follows this bit when RIGPIOEN = 1b.
3:1	Reserved	Read returns zero.
0	RIGPOEN	**0 = RI# indicates valid ring signal. (Normal ring-indicator mode)** 1 = RI# can be used as general purpose output and follows U7C[4] (RIGPO).

U7D GEND

Bit	D15	D14	D13	D12	D11	D10	D9	D8	D7	D6	D5	D4	D3	D2	D1	D0
Name		NLM													ATZD	FDP
Type	R/W															

Reset settings = 0x0000

Bit	Name	Function
15	Reserved	Read returns zero.
14	NLM	**0 = Enables "No Loop Current" detect.** 1 = Disables "No Loop Current" detect.
13:2	Reserved	Read returns zero.
1	ATZD	**ATZ Disable**
		0 = ATZ functions normally.
		1 = Disable ATZ command.
0	FDP	**FSK Data Processing** **0 = FSK data processing stops when carrier is lost.** 1 = FSK data processing continued for 2 bytes after carrier is lost.

© 2004, Copeland Communications, Inc.

U87 SAM

Bit	D15	D14	D13	D12	D11	D10	D9	D8	D7	D6	D5	D4	D3	D2	D1	D0
Name						MINT	SERM	FSMS	XMITT							
Type	R/W															

Reset settings = 0x0000

Bit	Name	Function
15:11	Reserved	Read returns zero.
10	MINT	**Minimal Transparency** **0 = Generates two-byte <EM> transparency sequences.** This option will use codes <EM><T5> through <EM><T20>, if possible, for received data conning two back-to-back bytes requiring transparency. 1 = Generates one-byte <EM> transparency sequences. This option will only use codes <EM><T1> through <EM><T4> for received data.
9	SERM	**Special Error Reporting Mode** **0 = Ignore unrecognized in-band commands.** 1 = Generate <EM><0x45> ("E" for error) in response to any unrecognized in-band commands.
8	FSMS	**Framed Sub-Mode Startup** **0 = Upon successful connection, enter Transport Sub-Mode. An <EM><FLAG> is required to enter Framed Sub-Mode.** 1 = Upon successful connection, immediately enter Framed Sub-Mode. The first received <EM><ERR> from a successful hunt is transformed into an <EM><flag>.
7:0	XMTT	**Transmitter Threshold** This value represents the number of bytes before a transmission is started. The following values are special: 0 The same as ten. Upon receipt of ten bytes, data is transferred. The DTE must supply a closing flag within the required time or an underrun will occur. 255 The same as infinity, e.g. never start a packet until the closing flag is received.

UAA V.29 Mode

Bit	D15	D14	D13	D12	D11	D10	D9	D8	D7	D6	D5	D4	D3	D2	D1	D0
Name															V29ENA	
Type	R/W															

Reset settings = 0x0000

Bit	Name	Function
15:2	Reserved	Read returns zero.
1	V29ENA	**0 = Disables V.29.** 1 = Enables V.29.
0	Reserved	**Read returns zero.**

© 2004, Copeland Communications, Inc.

Revision Information

Revision 1.0 to Revision 1.1

- Removed unused U registers.
- Updated PCB layout drawings
- Added FCC statement

© 2004, Copeland Communications, Inc.

Contact Information

Copeland Communications, Inc.
440 Colony Place
Gahanna, OH 43230
Tel: (614) 475-1690
Fax: (614) 882-6062

Email: info@copelandcommunications.com
Internet: www.copelandcommunications.com

Legal

Information contained in this publication regarding device applications and the like is intended through suggestion only and may be superseded by updates. It is your responsibility to ensure that your application meets with your specifications. No representation or warranty is given and no liability is assumed by Copeland Communications, Incorporated with respect to the accuracy or use of such information, or infringement of patents or other intellectual property rights arising from such use or otherwise. Use of Copeland Communication's products as critical components in life support systems is not authorized except with express written approval by Copeland Communications. No licenses are conveyed, implicitly or otherwise, under any intellectual property rights

Trademarks: Socket Modem™ is a trademark of Conexant systems. All other products or technologies are the trademarks or registered trademarks of their respective holders.

© 2004, Copeland Communications, Inc.

О компании

ООО "ТрейдЭлектроникс" - это оперативные поставки широкого спектра электронных компонентов отечественного и импортного производства напрямую от производителей и с крупнейших мировых складов. Реализуемая нашей компанией продукция насчитывает более полумиллиона наименований.

Благодаря этому наша компания предлагает к поставке практически не ограниченный ассортимент компонентов как оптовыми, мелкооптовыми партиями, так и в розницу.

Наличие собственной эффективной системы логистики обеспечивает надежную поставку продукции по конкурентным ценам в точно указанные сроки.

Срок поставки со стоков в **Европе и Америке – от 3 до 14 дней.**

Срок поставки из **Азии – от 10 дней.**

Благодаря развитой сети поставщиков, помогаем в поиске и приобретении экзотичных или снятых с производства компонентов.

Предоставляем спец цены на элементы для создания инженерных сэмплов.

Упорный труд, качественный результат дают нам право быть уверенными в себе и надежными для наших клиентов.

Наша компания это:

- Гарантия качества поставляемой продукции
- Широкий ассортимент
- Минимальные сроки поставок
- Техническая поддержка
- Подбор комплектации
- Индивидуальный подход
- Гибкое ценообразование

Наша организация особенно сильна в поставках модулей, микросхем, пассивных компонентов, ксайленсах (XC), EPF, EPM и силовой электроники.

Большой выбор предлагаемой продукции, различные виды оплаты и доставки, позволят Вам сэкономить время и получить максимум выгоды от сотрудничества с нами!

Trade Electronics.ru

гарантия бесперебойности производства и качества выпускаемой продукции

Перечень производителей, продукцию которых мы поставляем на российский рынок

AMD
ANALOG DEVICES
BOURNS
Coilcraft
élantec Semiconductor, Inc.
HARRIS
Infineon
JRC
MICREL
MOTOROLA
nichicon
PHILIPS
ROHM
SGS-THOMSON
Sipex
TAIYO YUDEN
TOKO
ZILOG
Winbond
Allegro
ATMEL
BURR - BROWN
EXAR
HITACHI
intel
Lattice
muRata
OKI
QUALCOMM
SAMSUNG
SHARP
SONY
TDK
TOSHIBA
KYOCERA
ALTERA
AVX
CITILYST
CYPRESS
FAIRCHILD SEMICONDUCTOR
HOLTEK
International IOR Rectifier
LINEAR TECHNOLOGY
MITSUBISHI
National Semiconductor
ON Semiconductor
REALTEK
SANYO
SHINDENGEN
SGS
TECCOR
TUNDRA
XILINX
Amphenol
Bay Linear
CIRRUS LOGIC
DALLAS
FUJITSU
IDT
intersil
MAXIM
molex
NEC
Panasonic
RENESAS
SII
SIEMENS
ST
Texas Instruments
VISHAY
ZETEX SEMICONDUCTORS

Trade Electronics.ru

гарантия бесперебойности производства и качества выпускаемой продукции

С удовольствием будем прорабатывать для Вас поставки всех необходимых компонентов по текущим запросам для скорейшего выявления групп элементов, по которым сотрудничество именно с нашей компанией будет для Вас максимально выгодным!

С уважением,

Менеджер отдела продаж ООО

«Трейд Электроникс»

Шишлаков Евгений

8 (495)668-30-28 доб 169

manager28@tradeelectronics.ru

http://www.tradeelectronics.ru/