High Speed, Dual, 4 A MOSFET Driver with Thermal Protection

ADP3623/ADP3624/ADP3625/ADP3633/ADP3634/ADP3635

FEATURES

Industry-standard-compatible pinout
High current drive capability
Precise threshold shutdown comparator
UVLO with hysteresis
Overtemperature warning signal
Overtemperature shutdown
3.3 V-compatible inputs
10 ns typical rise time and fall time @ 2.2 nF load
Matched propagation delays between channels
Fast propagation delay
9.5 V to 18 V supply voltage (ADP3633/ADP3634/ADP3635)
4.5 V to 18 V supply voltage (ADP3623/ADP3624/ADP3625)
Parallelable dual outputs
Rated from −40°C to +85°C ambient temperature
Thermally enhanced packages, 8-lead SOIC_N_EP and 8-lead MINI_SO_EP

APPLICATIONS

AC-to-dc switch mode power supplies
DC-to-dc power supplies
Synchronous rectification
Motor drives

GENERAL DESCRIPTION

The ADP362x/ADP363x is a family of high current and dual high speed drivers, capable of driving two independent N-channel power MOSFETs. The family uses the industry-standard footprint but adds high speed switching performance and improved system reliability.

The family has an internal temperature sensor and provides two levels of overtemperature protection, an overtemperature warning, and an overtemperature shutdown at extreme junction temperatures.

The SD function, generated from a precise internal comparator, provides fast system enable or shutdown. This feature allows redundant overvoltage protection, complementing the protection inside the main controller device, or provides safe system shutdown in the event of an overtemperature warning.

The wide input voltage range allows the driver to be compatible with both analog and digital PWM controllers.

Digital power controllers are supplied from a low voltage supply, and the driver is supplied from a higher voltage supply. The ADP362x/ADP363x family adds UVLO and hysteresis functions, allowing safe startup and shutdown of the higher voltage supply when used with low voltage digital controllers.

The device family is available in thermally enhanced SOIC_N_EP and MINI_SO_EP packaging to maximize high frequency and current switching in a small printed circuit board (PCB) area.

FUNCTIONAL BLOCK DIAGRAM

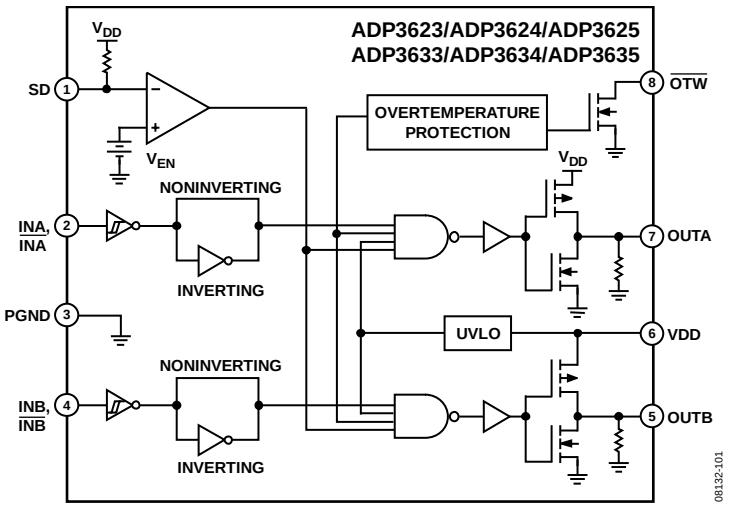

Figure 1.

Rev. A

Information furnished by Analog Devices is believed to be accurate and reliable. However, no responsibility is assumed by Analog Devices for its use, nor for any infringements of patents or other rights of third parties that may result from its use. Specifications subject to change without notice. No license is granted by implication or otherwise under any patent or patent rights of Analog Devices. Trademarks and registered trademarks are the property of their respective owners.

One Technology Way, P.O. Box 9106, Norwood, MA 02062-9106, U.S.A.
Tel: 781.329.4700 **www.analog.com**
Fax: 781.461.3113 **©2009 Analog Devices, Inc. All rights reserved.**

TABLE OF CONTENTS

Features ... 1
Applications ... 1
General Description ... 1
Functional Block Diagram ... 1
Revision History ... 2
Specifications ... 3
Timing B8_ep_kq ... 4
Absolute Maximum Ratings ... 6
ESD Caution ... 6
Pin Configuration and Function Descriptions ... 7
Typical Performance Characteristics ... 9
Test Circuit ... 11
Theory of Operation ... 12
Input Drive Requirements (INA, $\overline{\text{INA}}$, INB, $\overline{\text{INB}}$, and SD) ... 12
Low-Side Drivers (OUTA, OUTB) ... 12
Shutdown (SD) Function ... 12
Overtemperature Protections ... 12
Supply Capacitor Selection ... 13
PCB Layout Considerations ... 13
Parallel Operation ... 13
Thermal Considerations ... 14
Outline Dimensions ... 15
Ordering Guide ... 16

REVISION HISTORY

7/09—Rev. 0 to Rev. A

Added ADP3623, ADP3625, ADP3633, and ADP3635 ... Universal
Changes to Features Section, General Description Section, and Figure 1 ... 1
Changes to Table 1 ... 3
Added Figure 4; Renumbered Sequentially ... 4
Added Figure 7 ... 7
Added Table 3; Renumbered Sequentially ... 7
Added Figure 9 and Table 5 ... 8
Changes to Figure 10 ... 9
Changes to Figure 16 to Figure 19 Captions ... 10
Changes to Figure 20 ... 11
Changes to Figure 21, Input Drive Requirements (INA, $\overline{\text{INA}}$, INB, $\overline{\text{INB}}$, and SD) Section, and Figure 22 ... 12
Changes to Figure 23 and Parallel Operation Section ... 13
Changes to Design Example Section ... 14
Changes to Ordering Guide ... 16

5/09—Revision 0: Initial Version

SPECIFICATIONS

V_{DD} = 12 V, T_J = −40°C to +125°C, unless otherwise noted.[1]

Table 1.

Parameter	Symbol	Test Conditions/Comments	Min	Typ	Max	Unit
SUPPLY						
Supply Voltage Range	V_{DD}	ADP3633/ADP3634/ADP3635	9.5		18	V
	V_{DD}	ADP3623/ADP3624/ADP3625	4.5		18	V
Supply Current	I_{DD}	No switching, INA, $\overline{INA}$, INB, and $\overline{INB}$ disabled		1.2	3	mA
Standby Current	I_{SBY}	SD = 5 V		1.2	3	mA
UVLO						
Turn-On Threshold Voltage	V_{UVLO_ON}	V_{DD} rising, T_A = 25°C, ADP3633/ADP3634/ADP3635	8.0	8.7	9.5	V
	V_{UVLO_ON}	V_{DD} rising, T_A = 25°C, ADP3623/ADP3624/ADP3625	3.8	4.2	4.5	V
Turn-Off Threshold Voltage	V_{UVLO_OFF}	V_{DD} falling, T_A = 25°C, ADP3633/ADP3634/ADP3635	7.0	7.7	8.5	V
	V_{UVLO_OFF}	V_{DD} falling, T_A = 25°C, ADP3623/ADP3624/ADP3625	3.5	3.9	4.3	V
Hysteresis		ADP3633/ADP3634/ADP3635		1.0		V
		ADP3623/ADP3624/ADP3625		0.3		V
DIGITAL INPUTS (INA, $\overline{INA}$, INB, $\overline{INB}$, SD)						
Input Voltage High	V_{IH}		2.0			V
Input Voltage Low	V_{IL}				0.8	V
Input Current	I_{IN}	0 V < V_{IN} < V_{DD}	−20		+20	µA
SD Threshold High	V_{SD_H}		1.19	1.28	1.38	V
	V_{SD_H}	T_A = 25°C	1.21	1.28	1.35	V
SD Threshold Low	V_{SD_L}	T_A = 25°C	0.95	1.0	1.05	V
SD Hysteresis	V_{SD_HYST}	T_A = 25°C	240	280	320	mV
Internal Pull-Up/Pull-Down Current				6		µA
OUTPUTS (OUTA, OUTB)						
Output Resistance, Unbiased		VDD = PGND		80		kΩ
Peak Source Current		See Figure 20		4		A
Peak Sink Current		See Figure 20		−4		A
SWITCHING TIME						
OUTA, OUTB Rise Time	t_{RISE}	C_{LOAD} = 2.2 nF, see Figure 3 and Figure 4		10	25	ns
OUTA, OUTB Fall Time	t_{FALL}	C_{LOAD} = 2.2 nF, see Figure 3 and Figure 4		10	25	ns
OUTA, OUTB Rising Propagation Delay	t_{D1}	C_{LOAD} = 2.2 nF, see Figure 3 and Figure 4		14	30	ns
OUTA, OUTB Falling Propagation Delay	t_{D2}	C_{LOAD} = 2.2 nF, see Figure 3 and Figure 4		22	35	ns
SD Propagation Delay Low	t_{dL_SD}	See Figure 2		32	45	ns
SD Propagation Delay High	t_{dH_SD}	See Figure 2		48	75	ns
Delay Matching Between Channels				2		ns
OVERTEMPERATURE PROTECTION						
Overtemperature Warning Threshold	T_W	See Figure 6	120	135	150	°C
Overtemperature Shutdown Threshold	T_{SD}	See Figure 6	150	165	180	°C
Temperature Hysteresis for Shutdown	T_{HYS_SD}	See Figure 6		30		°C
Temperature Hysteresis for Warning	T_{HYS_W}	See Figure 6		10		°C
Overtemperature Warning Low	V_{OTW_OL}	Open drain, −500 µA			0.4	V

[1] All limits at temperature extremes guaranteed via correlation using standard statistical quality control (SQC) methods.

TIMING B?EP?KQ

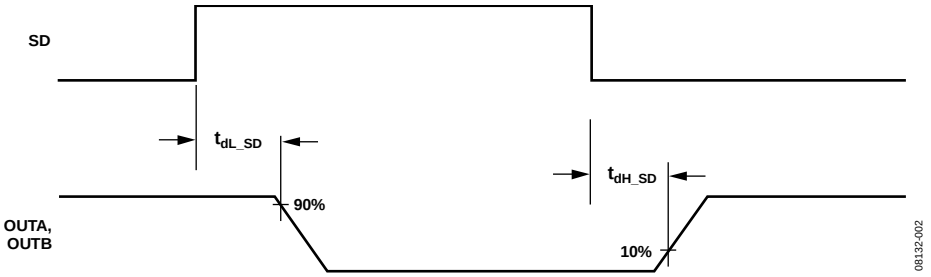

Figure 2. Shutdown Timing Diagram

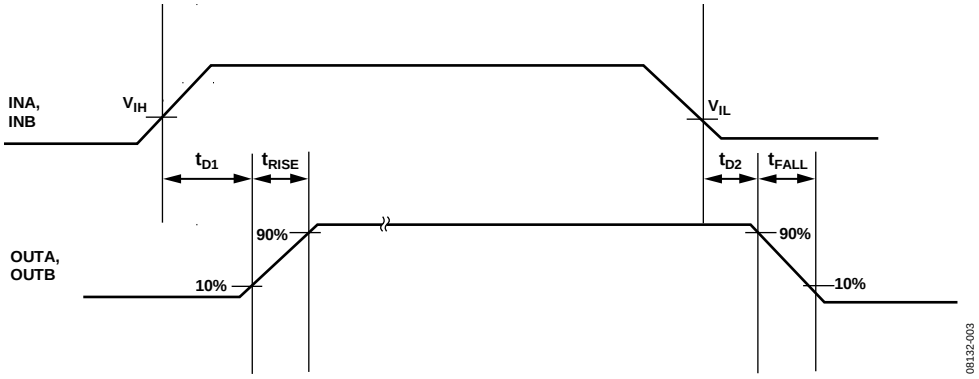

Figure 3. Output Timing Diagram (Noninverting)

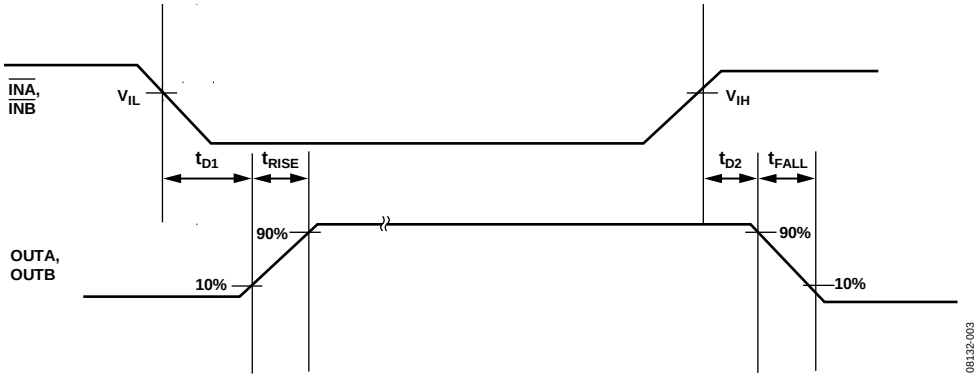

Figure 4. Output Timing Diagram (Inverting)

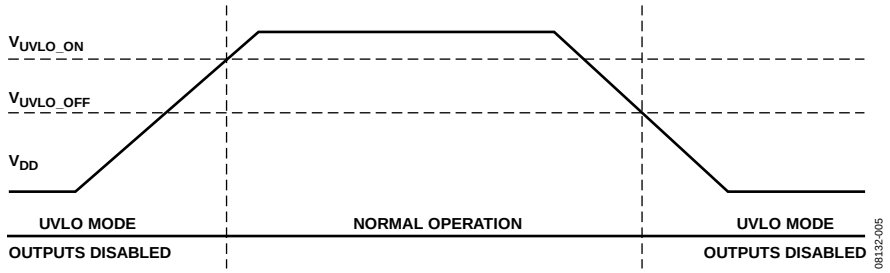

Figure 5. UVLO Function

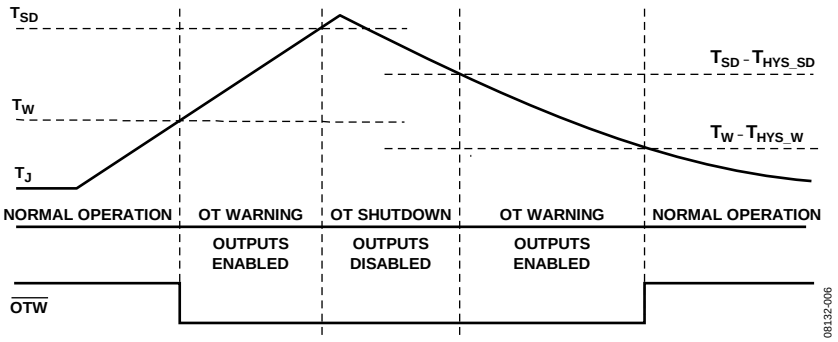

Figure 6. Overtemperature Warning and Shutdown

ABSOLUTE MAXIMUM RATINGS

Table 2.

Parameter	Rating
VDD	−0.3 V to +20 V
OUTA, OUTB	
DC	−0.3 V to V_{DD} + 0.3 V
<200 ns	−2 V to V_{DD} + 0.3 V
INA, $\overline{INA}$, INB, $\overline{INB}$, and SD	−0.3 V to V_{DD} + 0.3 V
ESD	
Human Body Model (HBM)	3.5 kV
Field Induced Charged Device Model (FICDM)	
SOIC_N_EP	1.5 kV
MINI_SO_EP	1.0 kV
θ_{JA}, JEDEC 4-Layer Board	
SOIC_N_EP[1]	59°C/W
MINI_SO_EP[1]	43°C/W
Junction Temperature Range	−40°C to +150°C
Storage Temperature Range	−65°C to +150°C
Lead Temperature	
Soldering (10 sec)	300°C
Vapor Phase (60 sec)	215°C
Infrared (15 sec)	260°C

[1] θ_{JA} is measured per JEDEC standards, JESD51-2, JESD51-5, and JESD51-7, as appropriate with the exposed pad soldered to the PCB.

Stresses above those listed under Absolute Maximum Ratings may cause permanent damage to the device. This is a stress rating only; functional operation of the device at these or any other conditions above those indicated in the operational section of this specification is not implied. Exposure to absolute maximum rating conditions for extended periods may affect device reliability.

ESD CAUTION

ESD (electrostatic discharge) sensitive device. Charged devices and circuit boards can discharge without detection. Although this product features patented or proprietary protection circuitry, damage may occur on devices subjected to high energy ESD. Therefore, proper ESD precautions should be taken to avoid performance degradation or loss of functionality.

PIN CONFIGURATION AND FUNCTION DESCRIPTIONS

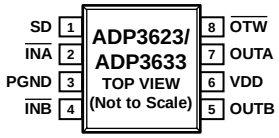

NOTES
1. THE EXPOSED PAD OF THE PACKAGE IS NOT DIRECTLY CONNECTED TO ANY PIN OF THE PACKAGE, BUT IT IS ELECTRICALLY AND THERMALLY CONNECTED TO THE DIE SUBSTRATE, WHICH IS THE GROUND OF THE DEVICE.

08132-008

Figure 7. ADP3623/ADP3633 Pin Configuration

Table 3. ADP3623/ADP3633 Pin Function Descriptions

Pin No.	Mnemonic	Description
1	SD	Output Shutdown. When high, this pin disables normal operation, forcing OUTA and OUTB low.
2	$\overline{\text{INA}}$	Inverting Input Pin for Channel A Gate Driver.
3	PGND	Ground. This pin should be closely connected to the source of the power MOSFET.
4	$\overline{\text{INB}}$	Inverting Input Pin for Channel B Gate Driver.
5	OUTB	Output Pin for Channel B Gate Driver.
6	VDD	Power Supply Voltage. Bypass this pin to PGND with a ~1 µF to 5 µF ceramic capacitor.
7	OUTA	Output Pin for Channel A Gate Driver.
8	$\overline{\text{OTW}}$	Overtemperature Warning Flag. Open drain, active low.

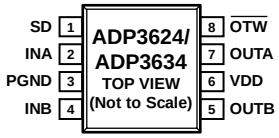

NOTES
1. THE EXPOSED PAD OF THE PACKAGE IS NOT DIRECTLY CONNECTED TO ANY PIN OF THE PACKAGE, BUT IT IS ELECTRICALLY AND THERMALLY CONNECTED TO THE DIE SUBSTRATE, WHICH IS THE GROUND OF THE DEVICE.

08132-001

Figure 8. ADP3624/ADP3634 Pin Configuration

Table 4. ADP3624/ADP3634 Pin Function Descriptions

Pin No.	Mnemonic	Description
1	SD	Output Shutdown. When high, this pin disables normal operation, forcing OUTA and OUTB low.
2	INA	Input Pin for Channel A Gate Driver.
3	PGND	Ground. This pin should be closely connected to the source of the power MOSFET.
4	INB	Input Pin for Channel B Gate Driver.
5	OUTB	Output Pin for Channel B Gate Driver.
6	VDD	Power Supply Voltage. Bypass this pin to PGND with a ~1 µF to 5 µF ceramic capacitor.
7	OUTA	Output Pin for Channel A Gate Driver.
8	$\overline{\text{OTW}}$	Overtemperature Warning Flag. Open drain, active low.

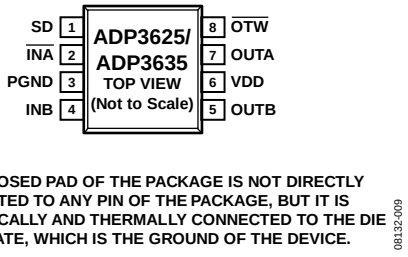

NOTES
1. THE EXPOSED PAD OF THE PACKAGE IS NOT DIRECTLY CONNECTED TO ANY PIN OF THE PACKAGE, BUT IT IS ELECTRICALLY AND THERMALLY CONNECTED TO THE DIE SUBSTRATE, WHICH IS THE GROUND OF THE DEVICE.

08132-009

Figure 9. ADP3625/ADP3635 Pin Configuration

Table 5. ADP3625/ADP3635 Pin Function Descriptions

Pin No.	Mnemonic	Description
1	SD	Output Shutdown. When high, this pin disables normal operation, forcing OUTA and OUTB low.
2	$\overline{\text{INA}}$	Inverting Input Pin for Channel A Gate Driver.
3	PGND	Ground. This pin should be closely connected to the source of the power MOSFET.
4	INB	Input Pin for Channel B Gate Driver.
5	OUTB	Output Pin for Channel B Gate Driver.
6	VDD	Power Supply Voltage. Bypass this pin to PGND with a ~1 µF to 5 µF ceramic capacitor.
7	OUTA	Output Pin for Channel A Gate Driver.
8	$\overline{\text{OTW}}$	Overtemperature Warning Flag. Open drain, active low.

TYPICAL PERFORMANCE CHARACTERISTICS

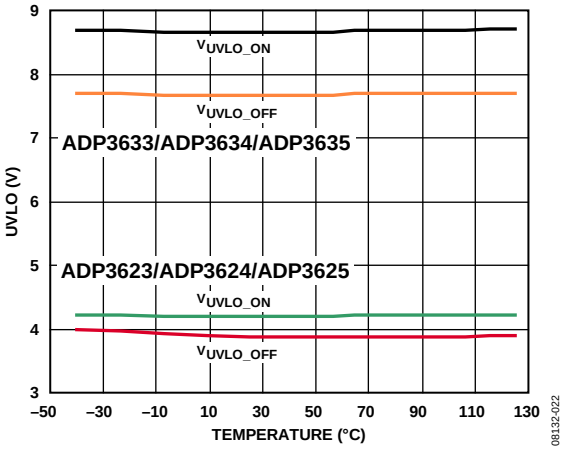

Figure 10. UVLO vs. Temperature

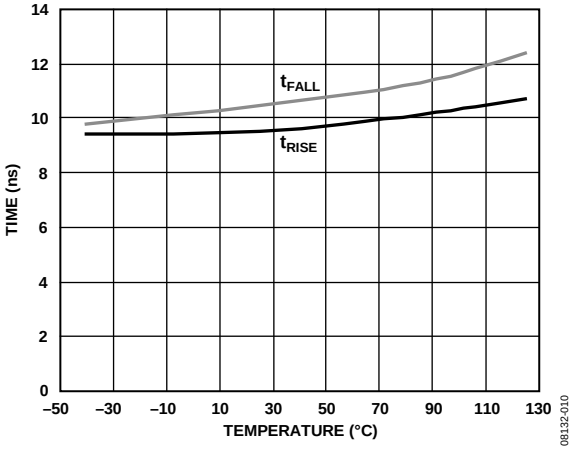

Figure 11. Rise and Fall Times vs. Temperature

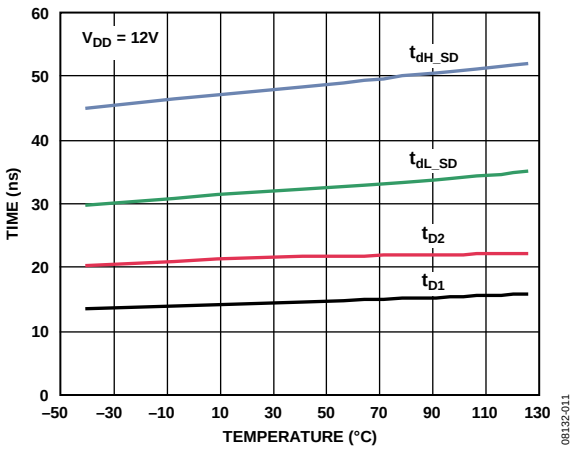

Figure 12. Propagation Delay vs. Temperature

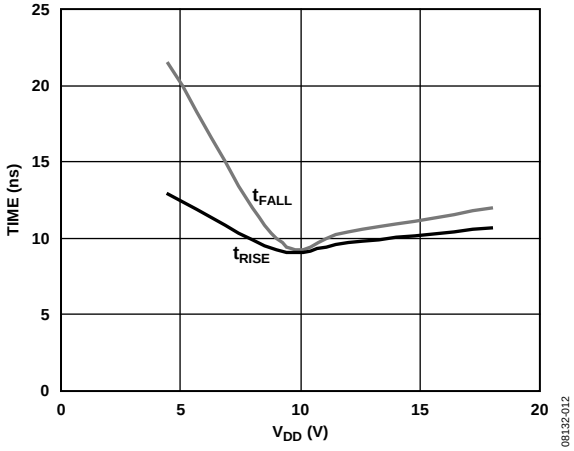

Figure 13. Rise and Fall Times vs. V_{DD}

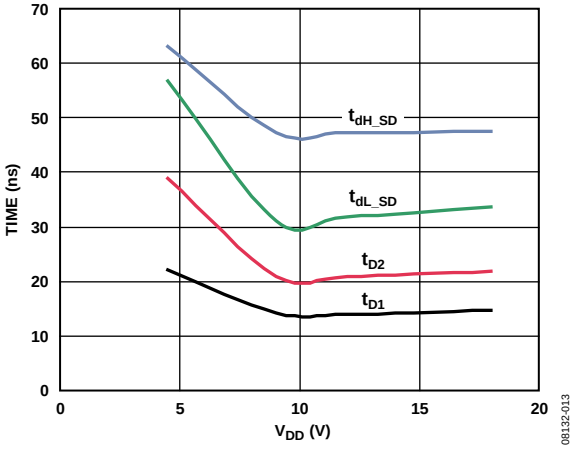

Figure 14. Propagation Delay vs. V_{DD}

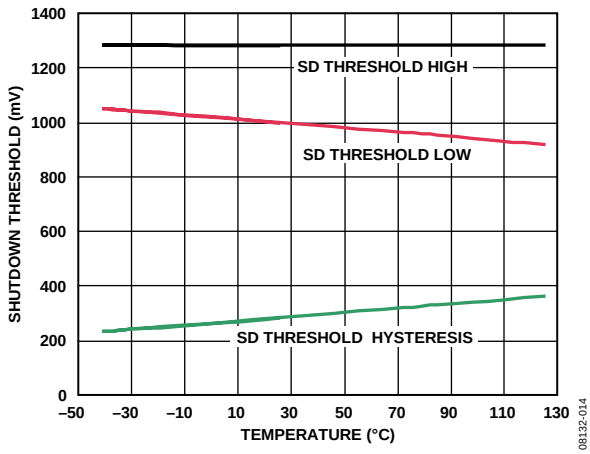

Figure 15. Shutdown Threshold vs. Temperature

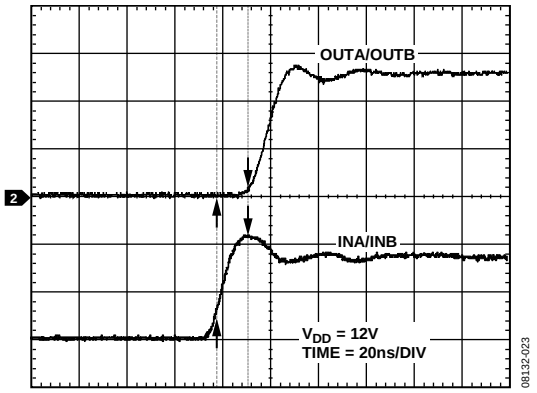

Figure 16. Typical Rise Propagation Delay (Noninverting)

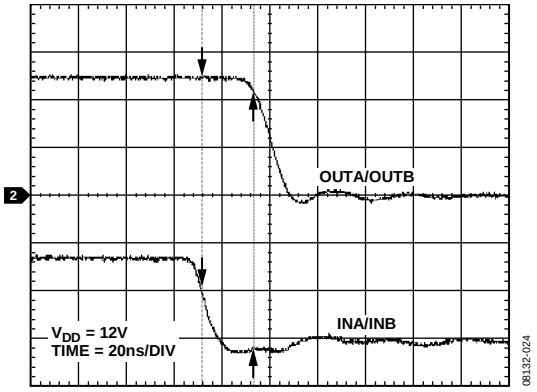

Figure 17. Typical Fall Propagation Delay (Noninverting)

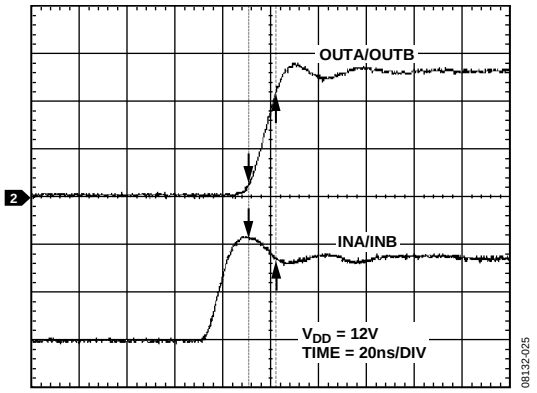

Figure 18. Typical Rise Time (Noninverting)

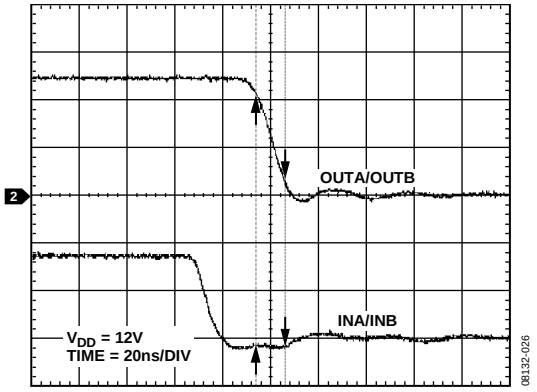

Figure 19. Typical Fall Time (Noninverting)

TEST CIRCUIT

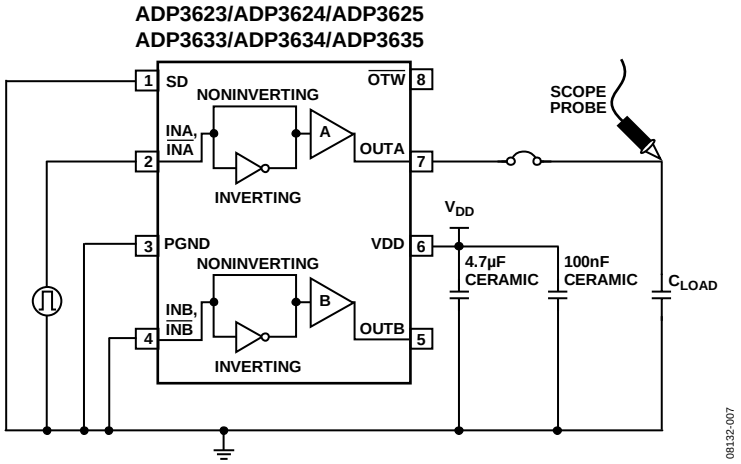

Figure 20. Test Circuit

THEORY OF OPERATION

The ADP362x/ADP363x family of dual drivers is optimized for driving two independent enhancement N-channel MOSFETs or insulated gate bipolar transistors (IGBTs) in high switching frequency applications.

These applications require high speed, fast rise and fall times, as well as short propagation delays. The capacitive nature of the aforementioned gated devices requires high peak current capability as well.

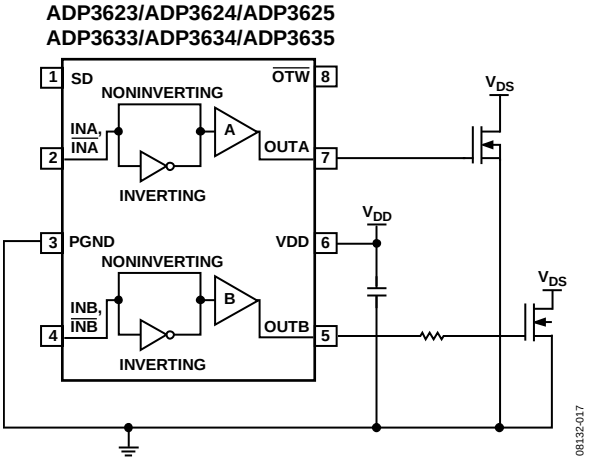

Figure 21. Typical Application Circuit

INPUT DRIVE REQUIREMENTS (INA, $\overline{\text{INA}}$, INB, $\overline{\text{INB}}$, AND SD)

The ADP362x/ADP363x family inputs are designed to meet the requirements of modern digital power controllers; the signals are compatible with 3.3 V logic levels. At the same time, the input structure allows for input voltages as high as V_{DD}.

The signals applied to the inputs (INA, $\overline{\text{INA}}$, INB, and $\overline{\text{INB}}$) should have steep and clean fronts. It is not recommended to apply slow changing signals to drive these inputs because they can result in multiple switching when the thresholds are crossed, causing damage to the power MOSFET or IGBT.

An internal pull-down resistor is present at the input, which guarantees that the power device is off in the event that the input is left floating.

The SD input has a precision comparator with hysteresis and is therefore suitable for slow changing signals (such as a scaled down output voltage); see the Shutdown (SD) Function section for more details on this comparator.

LOW-SIDE DRIVERS (OUTA, OUTB)

The ADP362x/ADP363x family of dual drivers is designed to drive ground referenced N-channel MOSFETs. The bias is internally connected to the V_{DD} supply and PGND.

When the ADP362x/ADP363x family is disabled, both low-side gates are held low. An internal impedance is present between the OUTA/OUTB pins and GND, even when V_{DD} is not present; this feature ensures that the power MOSFET is normally off when bias voltage is not present.

When interfacing the ADP362x/ADP363x family to external MOSFETs, the designer should consider ways to make a robust design that minimizes stresses on both the driver and the MOSFETs. These stresses include exceeding the short time duration voltage ratings on the OUTA and OUTB pins, as well as the external MOSFET.

Power MOSFETs are usually selected to have a low on resistance to minimize conduction losses, which usually implies a large input gate capacitance and gate charge.

SHUTDOWN (SD) FUNCTION

The ADP362x/ADP363x family features an advanced shutdown function, with accurate threshold and hysteresis.

The SD signal is an active high signal. An internal pull-up is present on this pin and, therefore, it is necessary to pull down the pin externally for drivers to operate normally.

In some power systems, it is sometimes necessary to provide an additional overvoltage protection (OVP) or overcurrent protection (OCP) shutdown signal to turn off the power devices (MOSFETs or IGBTs) in case of failure of the main controller.

An accurate internal reference is used for the SD comparator so that it can be used to detect OVP or OCP fault conditions.

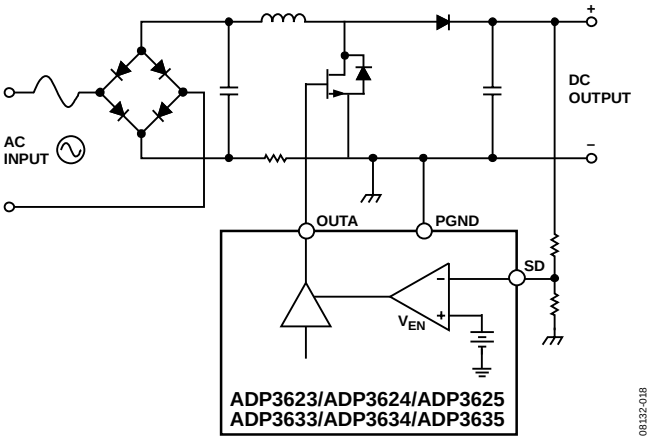

Figure 22. Shutdown Function Used for Redundant OVP

OVERTEMPERATURE PROTECTIONS

The ADP362x/ADP363x family provides two levels of overtemperature protections:

- Overtemperature warning (OTW)
- Overtemperature shutdown

The overtemperature warning is an open-drain logic signal and is active low. In normal operation, when no thermal warning is present, the signal is high, whereas when the warning threshold is crossed, the signal is pulled low.

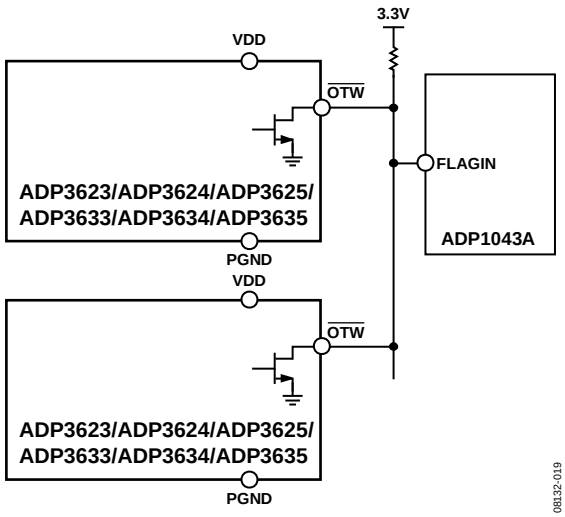

Figure 23. $\overline{OTW}$ Signaling Scheme Example

The $\overline{OTW}$ open-drain configuration allows connection of multiple devices to the same warning bus in a wire-OR'ed configuration, as shown in Figure 23.

The overtemperature shutdown turns off the device to protect it in the event that the die temperature exceeds the absolute maximum limit in Table 2.

SUPPLY CAPACITOR SELECTION

For the supply input (V_{DD}) of the ADP362x/ADP363x family, a local bypass capacitor is recommended to reduce the noise and to supply some of the peak currents that are drawn.

An improper decoupling can dramatically increase the rise times, cause excessive resonance on the OUTA and OUTB pins, and, in some extreme cases, even damage the device, due to inductive overvoltage on the VDD or OUTA/OUTB pins.

The minimum capacitance required is determined by the size of the gate capacitances being driven, but as a general rule, a 4.7 µF, low ESR capacitor should be used. Multilayer ceramic chip (MLCC) capacitors provide the best combination of low ESR and small size. Use a smaller ceramic capacitor (100 nF) with a better high frequency characteristic in parallel to the main capacitor to further reduce noise.

Keep the ceramic capacitor as close as possible to the ADP362x/ADP363x device, and minimize the length of the traces going from the capacitor to the power pins of the device.

PCB LAYOUT CONSIDERATIONS

Use the following general guidelines when designing printed circuit boards (PCBs):

- Trace out the high current paths and use short, wide (>40 mil) traces to make these connections.
- Minimize trace inductance between the OUTA and OUTB outputs and MOSFET gates.
- Connect the PGND pin of the ADP362x/ADP363x device as closely as possible to the source of the MOSFETs.
- Place the V_{DD} bypass capacitor as close as possible to the VDD and PGND pins.
- Use vias to other layers, when possible, to maximize thermal conduction away from the IC.

Figure 24 shows an example of the typical layout based on the preceding guidelines.

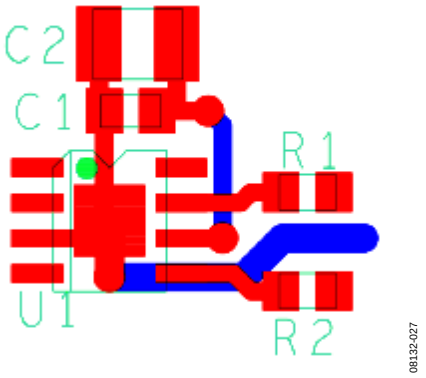

Figure 24. External Component Placement Example

Note that the exposed pad of the package is not directly connected to any pin of the package, but it is electrically and thermally connected to the die substrate, which is the ground of the device.

PARALLEL OPERATION

The two driver channels present in the ADP3623/ADP3633 or ADP3624/ADP3634 devices can be combined to operate in parallel to increase drive capability and minimize power dissipation in the driver.

The connection scheme for the ADP3624/ADP3634 devices is shown in Figure 25. In this configuration, INA and INB are connected together, and OUTA and OUTB are connected together.

Particular attention must be paid to the layout in this case to optimize load sharing between the two drivers.

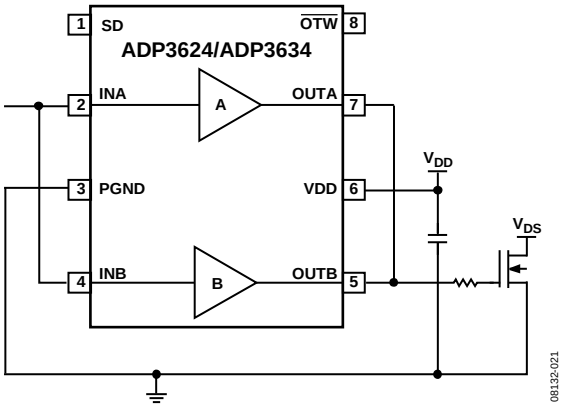

Figure 25. Parallel Operation

THERMAL CONSIDERATIONS

When designing a power MOSFET gate drive, the maximum power dissipation in the driver must be considered to avoid exceeding maximum junction temperature.

Data on package thermal resistance is provided in Table 2 to help the designer in this task.

There are several equally important aspects that must be considered.

- Gate charge of the power MOSFET being driven
- Bias voltage value used to power the driver
- Maximum switching frequency of operation
- Value of external gate resistance
- Maximum ambient (and PCB) temperature
- Type of package

All of these factors influence and limit the maximum allowable power dissipated in the driver.

The gate of a power MOSFET has a nonlinear capacitance characteristic. For this reason, although the input capacitance is usually reported in the MOSFET data sheet as C_{ISS}, it is not useful to calculate power losses.

The total gate charge necessary to turn on a power MOSFET device is usually reported on the device data sheet under Q_G. This parameter varies from a few nanocoulombs (nC) to several hundreds of nC, and is specified at a specific V_{GS} value (10 V or 4.5 V).

The power necessary to charge and then discharge the gate of a power MOSFET can be calculated as:

$$P_{GATE} = V_{GS} \times Q_G \times f_{SW}$$

where:
V_{GS} is the bias voltage powering the driver (VDD).
Q_G is the total gate charge.
f_{SW} is the maximum switching frequency.

The power dissipated for each gate (P_{GATE}) still needs to be multiplied by the number of drivers (in this case, 1 or 2) being used in each package, and it represents the total power dissipated in charging and discharging the gates of the power MOSFETs.

Not all of this power is dissipated in the gate driver because part of it is actually dissipated in the external gate resistor, R_G. The larger the external gate resistor is, the smaller the amount of power that is dissipated in the gate driver.

In modern switching power applications, the value of the gate resistor is kept at a minimum to increase switching speed and minimize switching losses.

In all practical applications where the external resistor is in the order of a few ohms, the contribution of the external resistor can be neglected, and the extra loss is assumed in the driver, providing a good guard band to the power loss calculations.

In addition to the gate charge losses, there are also dc bias losses, due to the bias current of the driver. This current is present regardless of the switching.

$$P_{DC} = V_{DD} \times I_{DD}$$

The total estimated loss is the sum of P_{DC} and P_{GATE}.

$$P_{LOSS} = P_{DC} + (n \times P_{GATE})$$

where n is the number of gates driven.

When the total power loss is calculated, the temperature increase can be calculated as

$$\Delta T_J = P_{LOSS} \times \theta_{JA}$$

Design Example

For example, consider driving two IRFS4310Z MOSFETs with a V_{DD} of 12 V at a switching frequency of 300 kHz, using an ADP3624 in the SOIC_N_EP package.

The maximum PCB temperature considered for this design is 85°C.

From the MOSFET data sheet, the total gate charge is Q_G = 120 nC.

$$P_{GATE} = 12\ V \times 120\ nC \times 300\ kHz = 432\ mW$$

$$P_{DC} = 12\ V \times 1.2\ mA = 14.4\ mW$$

$$P_{LOSS} = 14.4\ mW + (2 \times 432\ mW) = 878.4\ mW$$

From the MOSFET data sheet, the SOIC_N_EP thermal resistance is 59°C/W.

$$\Delta T_J = 878.4\ mW \times 59°C/W = 51.8°C$$

$$T_J = T_A + \Delta T_J = 136.8°C \leq T_{JMAX}$$

This estimated junction temperature does not factor in the power dissipated in the external gate resistor and, therefore, provides a certain guard band.

If a lower junction temperature is required by the design, the MINI_SO_EP package can be used, which provides a thermal resistance of 43°C/W, so that the maximum junction temperature is

$$\Delta T_J = 878.4\ mW \times 43°C/W = 37.7°C$$

$$T_J = T_A + \Delta T_J = 122.7°C \leq T_{JMAX}$$

Other options to reduce power dissipation in the driver include reducing the value of the V_{DD} bias voltage, reducing switching frequency, and choosing a power MOSFET with smaller gate charge.

OUTLINE DIMENSIONS

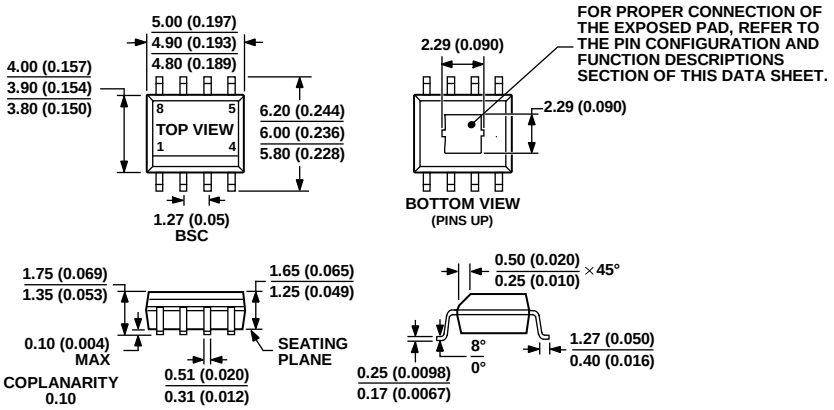

COMPLIANT TO JEDEC STANDARDS MS-012-A A

CONTROLLING DIMENSIONS ARE IN MILLIMETER; INCH DIMENSIONS (IN PARENTHESES) ARE ROUNDED-OFF MILLIMETER EQUIVALENTS FOR REFERENCE ONLY AND ARE NOT APPROPRIATE FOR USE IN DESIGN.

072808A

Figure 26. 8-Lead Standard Small Outline Package, with Exposed Pad [SOIC_N_EP]
Narrow Body (RD-8-1)
Dimensions shown in millimeters and (inches)

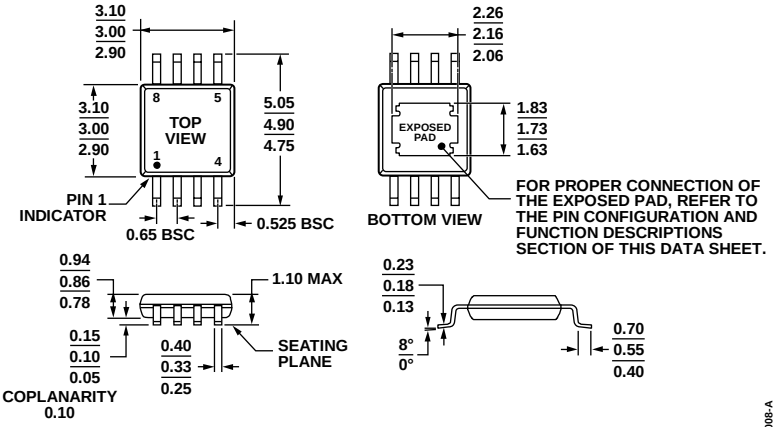

COMPLIANT TO JEDEC STANDARDS MO-187-AA-T

071008-A

Figure 27. 8-Lead Mini Small Outline Package with Exposed Pad [MINI_SO_EP]
(RH-8-1)
Dimensions shown in millimeters

ORDERING GUIDE

Model	UVLO Option	Temperature Range	Package Description	Package Option	Ordering Quantity	Branding
ADP3623ARDZ-RL[1]	4.5 V	−40°C to +85°C	8-Lead Standard Small Outline Package (SOIC_N_EP), 13" Tape and Reel	RD-8-1	2,500	
ADP3623ARHZ-RL[1]	4.5 V	−40°C to +85°C	8-Lead Mini Small Outline Package (MINI_SO_EP), 13"Tape and Reel	RH-8-1	3,000	P3
ADP3624ARDZ[1]	4.5 V	−40°C to +85°C	8-Lead Standard Small Outline Package (SOIC_N_EP)	RD-8-1		
ADP3624ARDZ-RL[1]	4.5 V	−40°C to +85°C	8-Lead Standard Small Outline Package (SOIC_N_EP), Tape Reel	RD-8-1	2,500	
ADP3624ARHZ[1]	4.5 V	−40°C to +85°C	8-Lead Mini Small Outline Package (MINI_SO_EP)	RH-8-1		P4
ADP3624ARHZ-RL[1]	4.5 V	−40°C to +85°C	8-Lead Mini Small Outline Package (MINI_SO_EP), Tape Reel	RH-8-1	3,000	P4
ADP3625ARDZ-RL[1]	4.5 V	−40°C to +85°C	8-Lead Standard Small Outline Package (SOIC_N_EP), 13" Tape and Reel	RD-8-1	2,500	
ADP3625ARHZ-RL[1]	4.5 V	−40°C to +85°C	8-Lead Mini Small Outline Package (MINI_SO_EP), 13"Tape and Reel	RH-8-1	3,000	P5
ADP3633ARDZ-RL[1]	9.5 V	−40°C to +85°C	8-Lead Standard Small Outline Package (SOIC_N_EP), 13" Tape and Reel	RD-8-1	2,500	
ADP3633ARHZ-RL[1]	9.5 V	−40°C to +85°C	8-Lead Mini Small Outline Package (MINI_SO_EP), 13"Tape and Reel	RH-8-1	3,000	L3
ADP3634ARDZ[1]	9.5 V	−40°C to +85°C	8-Lead Standard Small Outline Package (SOIC_N_EP)	RD-8-1		
ADP3634ARDZ-RL[1]	9.5 V	−40°C to +85°C	8-Lead Standard Small Outline Package (SOIC_N_EP), 13" Tape and Reel	RD-8-1	2,500	
ADP3634ARHZ[1]	9.5 V	−40°C to +85°C	8-Lead Mini Small Outline Package (MINI_SO_EP)	RH-8-1		L4
ADP3634ARHZ-RL[1]	9.5 V	−40°C to +85°C	8-Lead Mini Small Outline Package (MINI_SO_EP), 13"Tape and Reel	RH-8-1	3,000	L4
ADP3635ARDZ-RL[1]	9.5 V	−40°C to +85°C	8-Lead Standard Small Outline Package (SOIC_N_EP), 13" Tape and Reel	RD-8-1	2,500	
ADP3635ARHZ-RL[1]	9.5 V	−40°C to +85°C	8-Lead Mini Small Outline Package (MINI_SO_EP), 13"Tape and Reel	RH-8-1	3,000	L5

[1] Z = RoHS Compliant Part.

©2009 Analog Devices, Inc. All rights reserved. Trademarks and registered trademarks are the property of their respective owners.
D08132-0-7/09(A)

TradeElectronics.ru

гарантия бесперебойности производства и качества выпускаемой продукции

О компании

ООО "ТрейдЭлектроникс" - это оперативные поставки широкого спектра электронных компонентов отечественного и импортного производства напрямую от производителей и с крупнейших мировых складов. Реализуемая нашей компанией продукция насчитывает более полумиллиона наименований.

Благодаря этому наша компания предлагает к поставке практически не ограниченный ассортимент компонентов как оптовыми, мелкооптовыми партиями, так и в розницу.

Наличие собственной эффективной системы логистики обеспечивает надежную поставку продукции по конкурентным ценам в точно указанные сроки.

Срок поставки со стоков в **Европе и Америке – от 3 до 14 дней.**

Срок поставки из **Азии – от 10 дней.**

Благодаря развитой сети поставщиков, помогаем в поиске и приобретении экзотичных или снятых с производства компонентов.

Предоставляем спец цены на элементы для создания инженерных сэмплов.

Упорный труд, качественный результат дают нам право быть уверенными в себе и надежными для наших клиентов.

Наша компания это:

- Гарантия качества поставляемой продукции
- Широкий ассортимент
- Минимальные сроки поставок
- Техническая поддержка
- Подбор комплектации
- Индивидуальный подход
- Гибкое ценообразование

Наша организация особенно сильна в поставках модулей, микросхем, пассивных компонентов, ксайленсах (XC), EPF, EPM и силовой электроники.

Большой выбор предлагаемой продукции, различные виды оплаты и доставки, позволят Вам сэкономить время и получить максимум выгоды от сотрудничества с нами!

Trade Electronics.ru

гарантия бесперебойности производства и качества выпускаемой продукции

Перечень производителей, продукцию которых мы поставляем на российский рынок

Trade Electronics.ru

гарантия бесперебойности производства и качества выпускаемой продукции

С удовольствием будем прорабатывать для Вас поставки всех необходимых компонентов по текущим запросам для скорейшего выявления групп элементов, по которым сотрудничество именно с нашей компанией будет для Вас максимально выгодным!

С уважением,

Менеджер отдела продаж ООО

«Трейд Электроникс»

Шишлаков Евгений

8 (495)668-30-28 доб 169

manager28@tradeelectronics.ru

http://www.tradeelectronics.ru/