SLOS095 – D921, DECEMBER 1970 – REVISED OCTOBER 1990

- **Frequency and Transient Response Characteristics Adjustable**
- **Short-Circuit Protection**
- **Offset-Voltage Null Capability**
- **Wide Common-Mode and Differential Voltage Ranges**
- **Low Power Consumption**
- **No Latch-Up**
- **Same Pin Assignments as uA709**

uA748C . . . D OR P PACKAGE
uA748M . . . JG PACKAGE
(TOP VIEW)

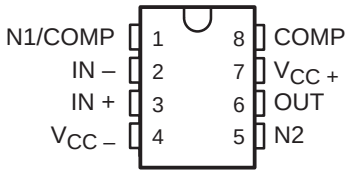

uA748M . . . U FLAT PACKAGE
(TOP VIEW)

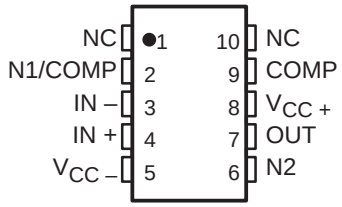

NC – No internal connection

description

The uA748 is a general-purpose operational amplifier that offers the same advantages and attractive features as the uA741 except for internal compensation. External compensation can be as simple as a 30-pF capacitor for unity-gain conditions and, when the closed-loop gain is greater than one, can be changed to obtain wider bandwidth or higher slew rate. This circuit features high gain, large differential and common-mode input voltage range, and output short-circuit protection. Input offset-voltage adjustment can be provided by connecting a variable resistor between the offset null pins as shown in Figure 12.

The uA748C is characterized for operation from 0°C to 70°C; the uA748M is characterized for operation over the full military temperature range of –55°C to 125°C.

symbol

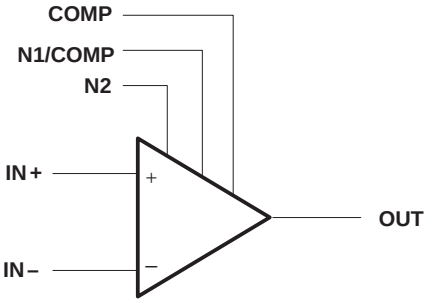

AVAILABLE OPTIONS

T_A	V_{IO} max AT 25°C	PACKAGE			
		8-PIN			10-PIN
		SMALL OUTLINE (D)	CERAMIC DIP (JG)	PLASTIC DIP (P)	FLAT PACK (U)
0°C to 70°C	6 mV	uA748CD	—	uA748CP	—
–55°C to 125°C	5 mV	—	uA748MJG	—	uA747MU

The D package is available taped and reeled. Add the suffix R to the device type,(e.g., uA748CDR).

PRODUCTION DATA information is current as of publication date. Products conform to specifications per the terms of Texas Instruments standard warranty. Production processing does not necessarily include testing of all parameters.

Copyright © 1990, Texas Instruments Incorporated

schematic

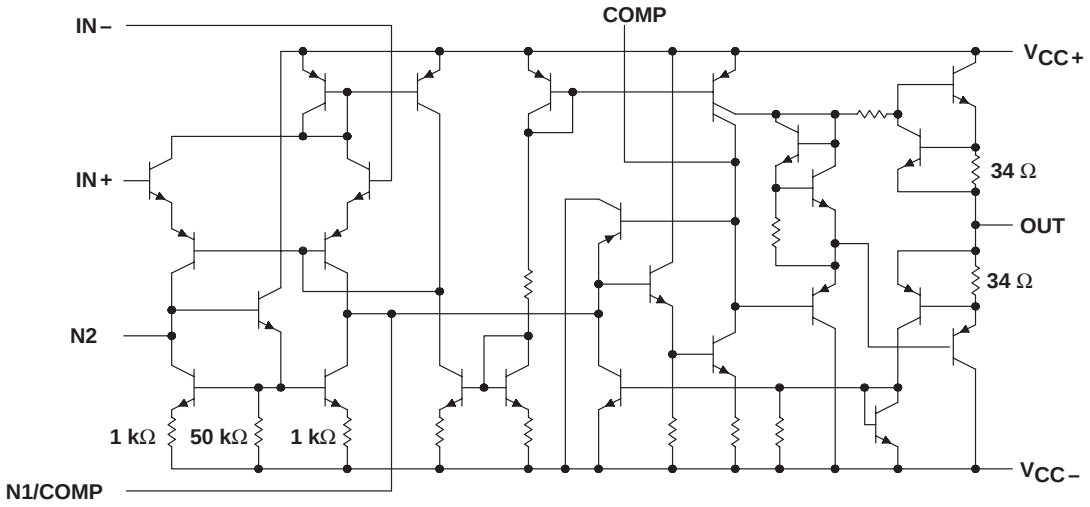

Resistor values shown are nominal.

absolute maximum ratings over operating free-air temperature range (unless otherwise noted)

		uA748C	uA748M	UNIT
Supply voltage, V_{CC+} (see Note 1)		18	22	V
Supply voltage, V_{CC-} (see Note 1)		–18	–22	V
Differential input voltage (see Note 2)		±30	±30	V
Input voltage (either input, see Notes 1 and 3)		±15	±15	V
Voltage range between either offset null terminal (N1/N2) and V_{CC-}		–0.5 to 2	–0.5	V
Duration of output short circuit (see Note 4)		unlimited	unlimited	
Continuous total power dissipation		See Dissipation Rating Table		
Operating free-air temperature range		0 to 70	–55 to 125	°C
Storage temperature range		–65 to 150	–65 to 150	°C
Lead temperature 1,6 mm (1/16 inch) from case for 60 seconds	JG or U package		300	°C
Lead temperature 1,6 mm (1/16 inch) from case for 10 seconds	D or P package	260		°C

NOTES: 1. All voltage values, unless otherwise noted, are with respect to the midpoint between V_{CC+} and V_{CC-}.
2. Differential voltages are at the noninverting input terminal with respect to the inverting input terminal.
3. The magnitude of the input voltage must never exceed the magnitude of the supply voltage or 15V, whichever is less.
4. The output may be shorted to ground or either power supply. For the uA748M only, the unlimited duration of the short circuit applies at (or below) 125°C case temperature or 75°C free-air temperature

DISSIPATION RATING TABLE

PACKAGE	$T_A \le 25°C$ POWER RATING	DERATING FACTOR	DERATE ABOVE T_A	$T_A = 70°C$ POWER RATING	$T_A = 125°C$ POWER RATING
D	500 mW	5.8 mW/°C	64°C	464 mW	N/A
JG	500 mW	8.4 mW/°C	90°C	500 mW	210 mW
P	500 mW	N/A	N/A	500 mW	N/A
U	500 mW	5.4 mW/°C	57°C	432 mW	135 mW

electrical characteristics at specified free-air temperature, $V_{CC\pm}$ = ±15 V, C_C = 30 pF

PARAMETER		TEST CONDITIONS†		uA748C MIN	uA748C TYP	uA748C MAX	uA748M MIN	uA748M TYP	uA748M MAX	UNIT
V_{IO}	Input offset voltage	V_O = 0	25°C		1	6		1	5	mV
			Full range			7.5			6	
I_{IO}	Input offset current	V_O = 0	25°C		20	200		20	200	nA
			Full range			300			500	
I_{IB}	Input bias current	V_O = 0	25°C		80	500		80	500	nA
			Full range			800			1500	
V_{ICR}	Common-mode input voltage range		25°C	±12	±13		±12	±13		V
			Full range	±12			±12			
$V_{O(PP)}$	Maximum peak output voltage swing	R_L = 10 kΩ	25°C	±12	±14		±12	±14		V
		R_L ≥ 10 kΩ	Full range	±12			±12			
		R_L = 2 kΩ	25°C	±10	±13		±10	±13		
		R_L ≥ 2 kΩ	Full range	±10			±10			
A_{VD}	Large-signal differential voltage amplification	R_L ≥ 2 kΩ, V_O = ± 10 V	25°C	20	200		50	200		V/mV
			Full range	15			25			
r_i	Input resistance		25°C	0.3	2		0.3	2		MΩ
r_o	Output resistance	V_O = 0, See Note 5	25°C		75			75		Ω
C_i	Input capacitance		25°C		1.4			1.4		pF
CMRR	Common-mode rejection ratio	V_{IC} = V_{ICR}min, V_O = 0	25°C	70	90		70	90		dB
			Full range	70			70			
k_{SVS}	Supply-voltage sensitivity (ΔV_{IO} / ΔV_{CC})	V_{CC} = ± 9 V to ± 15 V, V_O = 0	25°C		30	150		30	150	µV/V
			Full range			150			150	
I_{OS}	Short-circuit output current		25°C		±25	±40		±25	±40	mA
I_{CC}	Supply current	No load, V_O = 0	25°C		1.7	2.8		1.7	2.8	mA
			Full range			3.3			3.3	
P_D	Power dissipation (each amplifier)	No load, V_O = 0	25°C		50	85		50	85	mW
			Full range			100			100	

† All characteristics are measured under open-loop conditions with zero common-mode input voltage unless otherwise specified. Full range for uA748C is 0°C to 70°C and for uA748M is –55°C to 125°C.

NOTE 5: This typical value applies only at frequencies above a few hundred hertz because of the effects of drift and thermal feedback.

operating characteristics, $V_{CC\pm}$ = ± 15 V, T_A = 25°C

PARAMETER		TEST CONDITIONS	MIN	TYP	MAX	UNIT
t_r	Rise time	V_I = 20 mV, R_L = 2 kΩ, C_L = 100 pF, C_C = 30 pF, See Figure 1		0.3		µs
	Overshoot factor			5%		
SR	Slew rate at unity gain	V_I = 10 V, R_L = 2 kΩ, C_L = 100 pF, C_C = 30 pF, See Figure 1		0.5		V/µs

PARAMETER MEASUREMENT INFORMATION

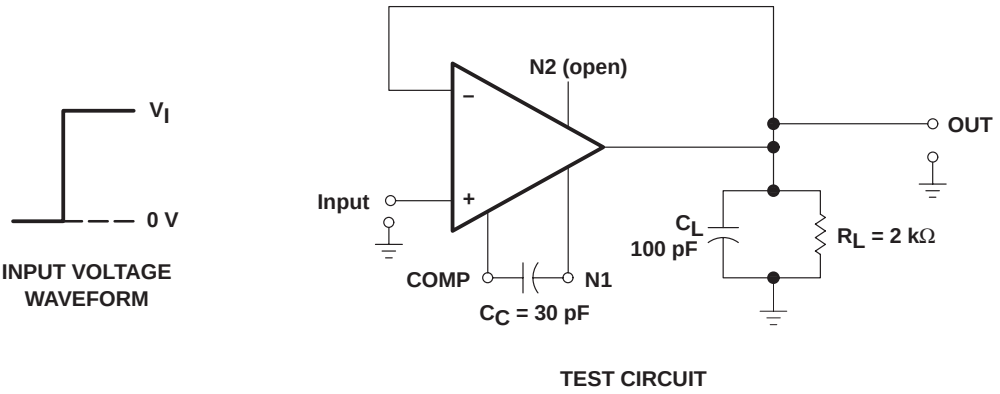

Figure 1. Rise Time, Overshoot, and Slew Rate

TYPICAL CHARACTERISTICS†

INPUT OFFSET CURRENT vs FREE-AIR TEMPERATURE

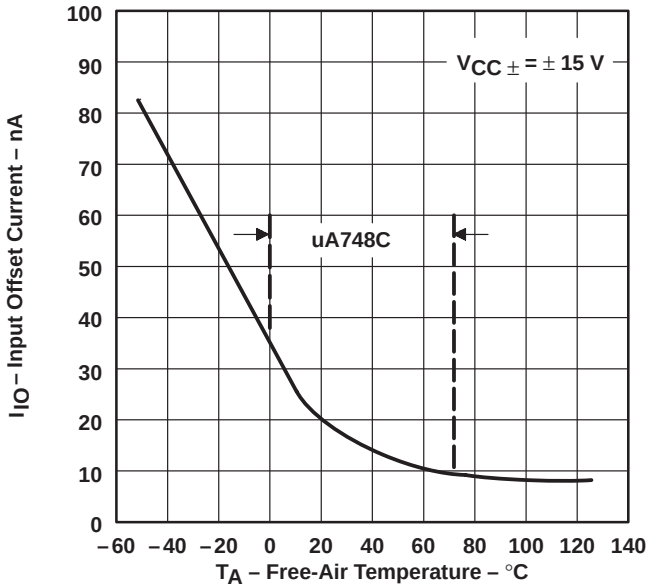

Figure 2

INPUT BIAS CURRENT vs FREE-AIR TEMPERATURE

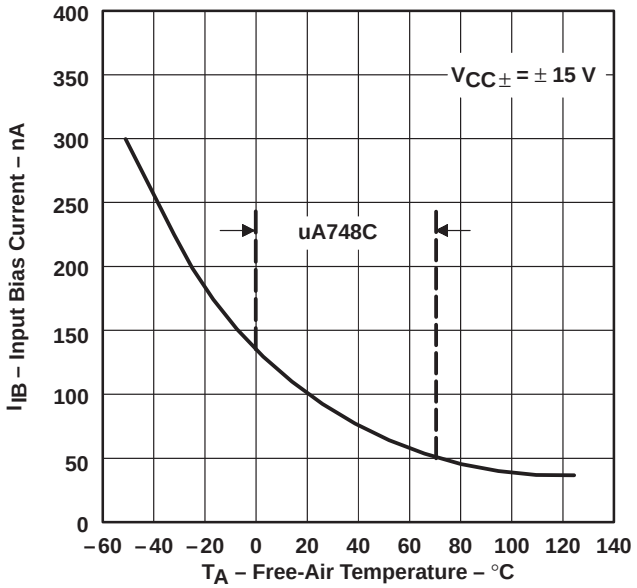

Figure 3

† Data at high and low temperatures are applicably only within the rated operating free-air temperature range of the particular devices.

TYPICAL CHARACTERISTICS

MAXIMUM PEAK OUTPUT VOLTAGE vs LOAD RESISTANCE

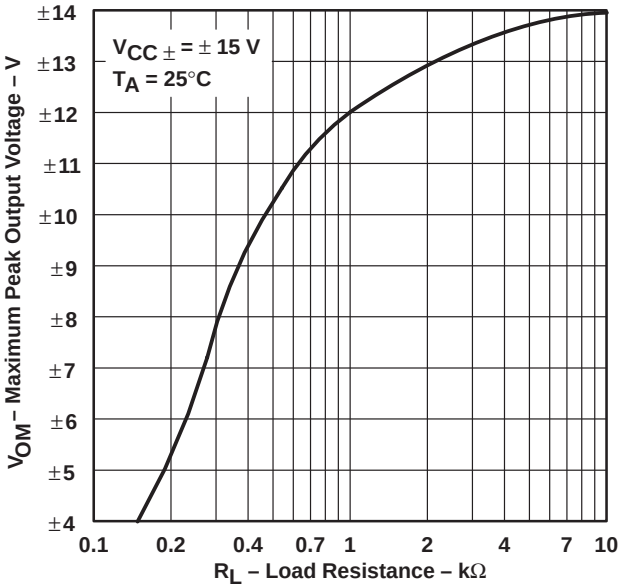

Figure 4

MAXIMUM PEAK OUTPUT VOLTAGE vs FREQUENCY

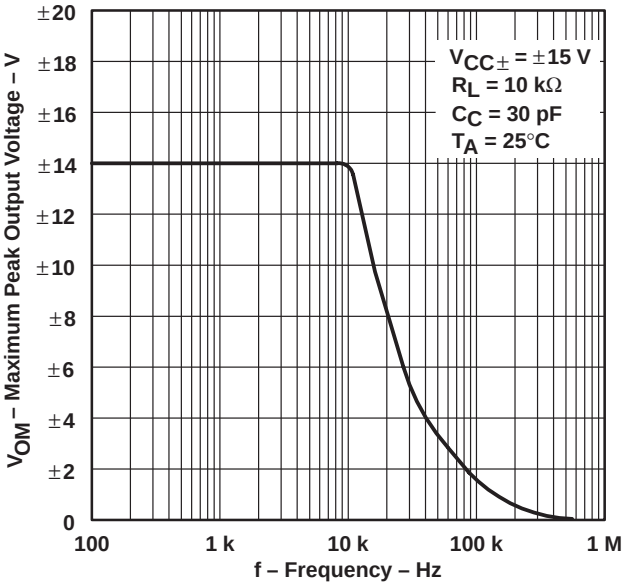

Figure 5

OPEN-LOOP LARGE-SIGNAL DIFFERENTIAL VOLTAGE AMPLIFICATION vs SUPPLY VOLTAGE

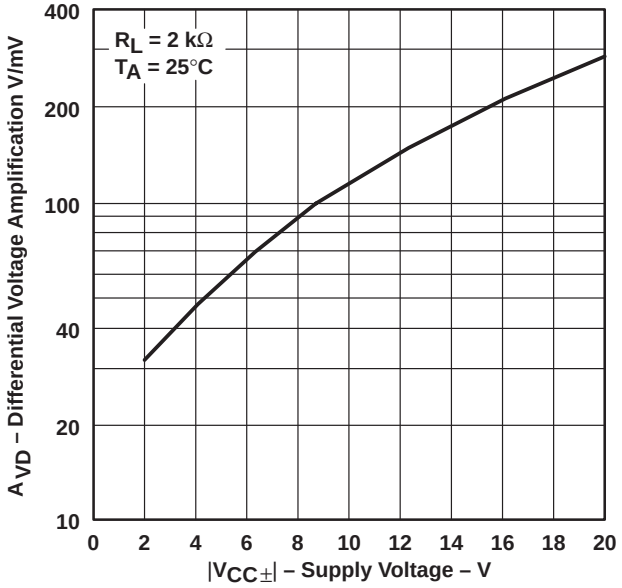

Figure 6

OPEN-LOOP LARGE-SIGNAL DIFFERENTIAL VOLTAGE AMPLIFICATION vs FREQUENCY

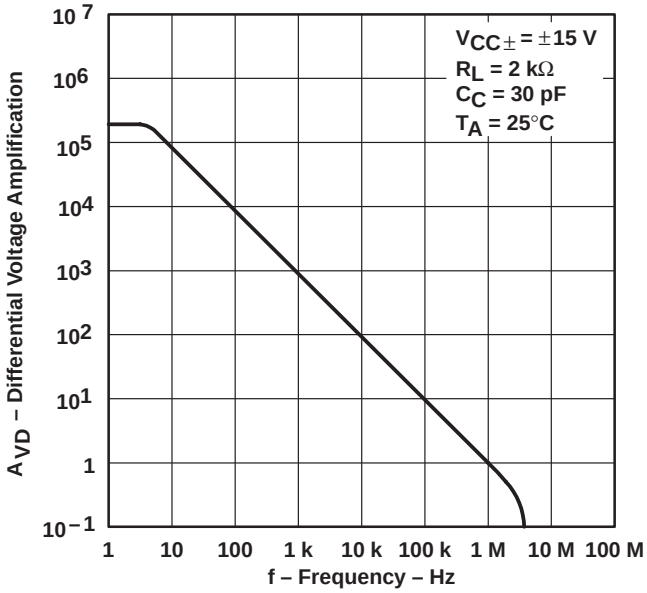

Figure 7

TYPICAL CHARACTERISTICS

COMMON-MODE REJECTION RATIO vs FREQUENCY

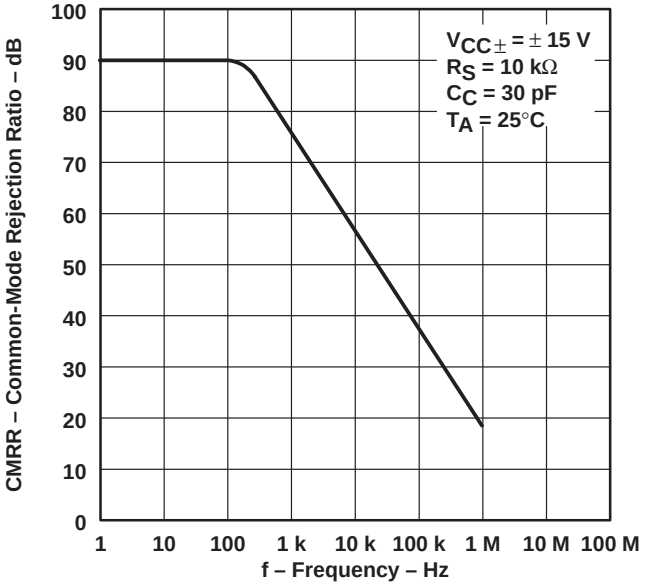

Figure 8

OUTPUT VOLTAGE vs ELAPSED TIME

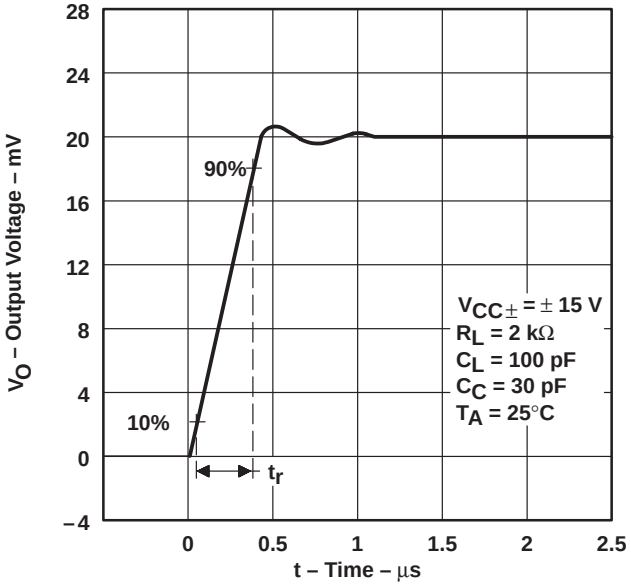

Figure 9

VOLTAGE-FOLLOWER LARGE-SIGNAL PULSE RESPONSE

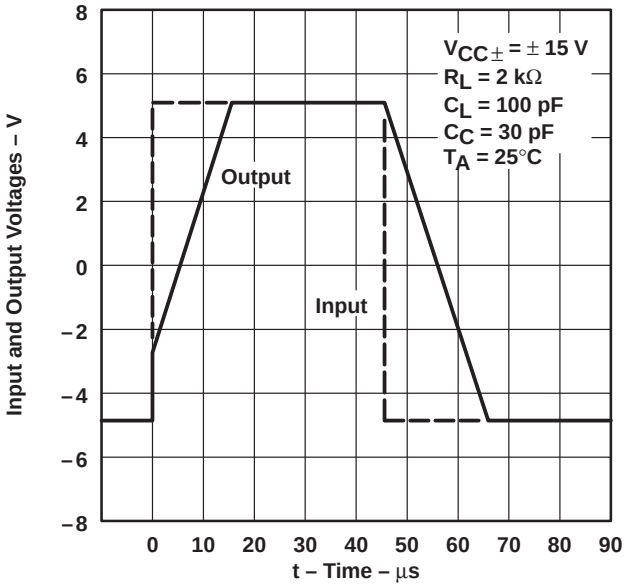

Figure 10

TYPICAL APPLICATION DATA

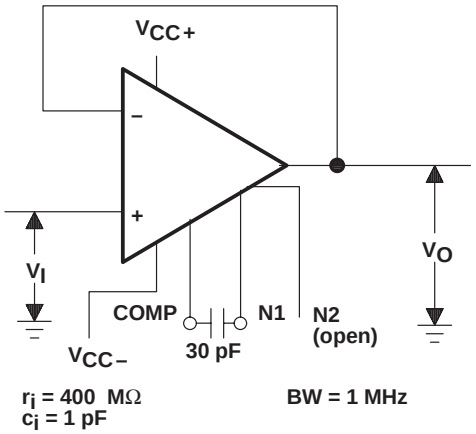

Figure 11. Unity-Gain Voltage Follower

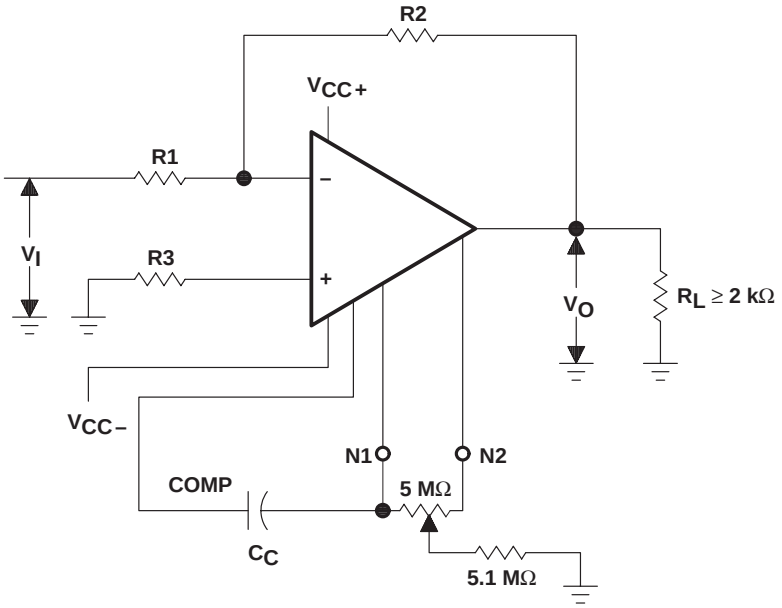

$$\frac{V_O}{V_I} = -\frac{R2}{R1}$$

$$C_C \geq \frac{R1 \cdot 30\ pF}{R1 + R2}$$

$$R3 = \frac{R1 \cdot R2}{R1 + R2}$$

Figure 12. Inverting Circuit With Adjustable Gain Compensation and Offset Adjustment

IMPORTANT NOTICE

Texas Instruments and its subsidiaries (TI) reserve the right to make changes to their products or to discontinue any product or service without notice, and advise customers to obtain the latest version of relevant information to verify, before placing orders, that information being relied on is current and complete. All products are sold subject to the terms and conditions of sale supplied at the time of order acknowledgement, including those pertaining to warranty, patent infringement, and limitation of liability.

TI warrants performance of its semiconductor products to the specifications applicable at the time of sale in accordance with TI's standard warranty. Testing and other quality control techniques are utilized to the extent TI deems necessary to support this warranty. Specific testing of all parameters of each device is not necessarily performed, except those mandated by government requirements.

CERTAIN APPLICATIONS USING SEMICONDUCTOR PRODUCTS MAY INVOLVE POTENTIAL RISKS OF DEATH, PERSONAL INJURY, OR SEVERE PROPERTY OR ENVIRONMENTAL DAMAGE ("CRITICAL APPLICATIONS"). TI SEMICONDUCTOR PRODUCTS ARE NOT DESIGNED, AUTHORIZED, OR WARRANTED TO BE SUITABLE FOR USE IN LIFE-SUPPORT DEVICES OR SYSTEMS OR OTHER CRITICAL APPLICATIONS. INCLUSION OF TI PRODUCTS IN SUCH APPLICATIONS IS UNDERSTOOD TO BE FULLY AT THE CUSTOMER'S RISK.

In order to minimize risks associated with the customer's applications, adequate design and operating safeguards must be provided by the customer to minimize inherent or procedural hazards.

TI assumes no liability for applications assistance or customer product design. TI does not warrant or represent that any license, either express or implied, is granted under any patent right, copyright, mask work right, or other intellectual property right of TI covering or relating to any combination, machine, or process in which such semiconductor products or services might be or are used. TI's publication of information regarding any third party's products or services does not constitute TI's approval, warranty or endorsement thereof.

Copyright © 1998, Texas Instruments Incorporated

О компании

ООО "ТрейдЭлектроникс" - это оперативные поставки широкого спектра электронных компонентов отечественного и импортного производства напрямую от производителей и с крупнейших мировых складов. Реализуемая нашей компанией продукция насчитывает более полумиллиона наименований.

Благодаря этому наша компания предлагает к поставке практически не ограниченный ассортимент компонентов как оптовыми, мелкооптовыми партиями, так и в розницу.

Наличие собственной эффективной системы логистики обеспечивает надежную поставку продукции по конкурентным ценам в точно указанные сроки.

Срок поставки со стоков в **Европе и Америке – от 3 до 14 дней.**

Срок поставки из **Азии – от 10 дней.**

Благодаря развитой сети поставщиков, помогаем в поиске и приобретении экзотичных или снятых с производства компонентов.

Предоставляем спец цены на элементы для создания инженерных сэмплов.

Упорный труд, качественный результат дают нам право быть уверенными в себе и надежными для наших клиентов.

Наша компания это:

- Гарантия качества поставляемой продукции
- Широкий ассортимент
- Минимальные сроки поставок
- Техническая поддержка
- Подбор комплектации
- Индивидуальный подход
- Гибкое ценообразование

Наша организация особенно сильна в поставках модулей, микросхем, пассивных компонентов, ксайленсах (XC), EPF, EPM и силовой электроники.

Большой выбор предлагаемой продукции, различные виды оплаты и доставки, позволят Вам сэкономить время и получить максимум выгоды от сотрудничества с нами!

Trade Electronics.ru

гарантия бесперебойности производства и качества выпускаемой продукции

Перечень производителей, продукцию которых мы поставляем на российский рынок

AMD
ANALOG DEVICES
BOURNS
Coilcraft
élantec Semiconductor, Inc.
HARRIS
Infineon
JRC
MICREL
MOTOROLA
nichicon
PHILIPS
ROHM
SGS-THOMSON
Sipex
TAIYO YUDEN
TOKO
ZILOG
Winbond
Allegro
ATMEL
BURR - BROWN
EXAR
HITACHI
intel
Lattice
muRata
OKI
QUALCOMM
SAMSUNG
SHARP
SONY
TDK
TOSHIBA
KYOCERA
ALTERA
AVX
CITILYST
CYPRESS
FAIRCHILD SEMICONDUCTOR
HOLTEK
International IOR Rectifier
LINEAR TECHNOLOGY
MITSUBISHI
National Semiconductor
ON Semiconductor
REALTEK
SANYO
SHINDENGEN
SGS
TECCOR
TUNDRA
XILINX
Amphenol
Bay Linear
CIRRUS LOGIC
DALLAS
FUJITSU
IDT
intersil
MAXIM
molex
NEC
Panasonic
RENESAS
SII
SIEMENS
ST
Texas Instruments
VISHAY
ZETEX SEMICONDUCTORS

Trade Electronics.ru

гарантия бесперебойности производства и качества выпускаемой продукции

С удовольствием будем прорабатывать для Вас поставки всех необходимых компонентов по текущим запросам для скорейшего выявления групп элементов, по которым сотрудничество именно с нашей компанией будет для Вас максимально выгодным!

С уважением,

Менеджер отдела продаж ООО

«Трейд Электроникс»

Шишлаков Евгений

8 (495)668-30-28 доб 169

manager28@tradeelectronics.ru

http://www.tradeelectronics.ru/